ERM

700 W. Virginia Street
Suite 601
Milwaukee, Wisconsin
53029

Telephone: +1 414 289 9505
Fax: +1 414 289 9552

www.erm.com

August 11, 2020

Steven Martin
NR Region Program Manager
Wisconsin Department of Natural Resources
3911 Fish Hatchery Rd
Fitchburg, WI 53711

Reference: 0441161

Subject: Remedial Action Design Report (Soil Vapor Extraction System Design and Specifications)
Former Spice Room – Building 43
910 Mayer, Madison, Wisconsin
BRRTs # 02-13-580723

Dear Mr. Martin,

Environmental Resources Management, Inc. (ERM), on behalf of 910 Mayer LLC, prepared the attached Remedial Action Design Report (RADR) - Soil Vapor Extraction (SVE) Design Plans and Specifications to address shallow vadose zone soils located beneath and adjacent to the former Spice Room in Building 43 at the former Oscar Mayer facility ("the Site") located at 910 Mayer Ave in Madison, Wisconsin.

The full-scale SVE system design has been prepared to satisfy the requirements of the Wisconsin Administrative Code (WAC) Sections NR724.09 and NR 724.11 to address shallow vadose zone soils as specified in the WDNR Site Investigation Complete Determination – Former Spice Room letter dated April 27, 2020. The RADR and SVE Design Plans and Specifications are provided and build on previous Site Investigation and Pilot Testing data previously submitted to the WDNR. 910 Mayer requests WDNR review and approval of the RADR and SVE Design Plans and Specifications. Please note that 910 Mayer also submitted a Construction Permit Exemption request on 7/30/2020 to the WDNR Bureau of Air Management for the SVE discharge.

910 Mayer appreciates WDNR review of the RADR and SVE Design Plans and Specifications and look forward to implementation of the remedy. A fee for $1,050 is being submitted to the WDNR.

Yours sincerely

David de Courcy-Bower, P.E.
Partner

Remedial Action Design Report

Soil Vapor Extraction System – Former Spice Room, 910 Mayer, Madison, Wisconsin

August 11, 2020

Project No.: 0441161

The business of sustainability

ERM

Document details	
Document title	Remedial Action Design Report
Document subtitle	Soil Vapor Extraction System – Former Spice Room, 910 Mayer, Madison, Wisconsin
Project No.	0441161
Date	August 11, 2020
Version	1.0
Author	David de Courcy-Bower, PE
Client Name	910 Mayer LLC

Document history

				ERM approval to issue		
Version	Revision	Author	Reviewed by	Name	Date	Comments
FINAL	00	DB	WM/JR	TO	8.11.2020	Text

Signature Page

11 August 2020

Remedial Action Design Report

Soil Vapor Extraction System – Former Spice Room, 910 Mayer, Madison, Wisconsin

David de Courcy-Bower, PE$_{WI}$
Partner

Wesley L. May, PE$_{WI}$
Principal Engineer

I, Wesley L. May, hereby certify that I am a registered professional engineer in the State of Wisconsin, registered in accordance with the requirements of ch. A-E 4, Wis. Adm. Code; that this document has been prepared in accordance with the Rules of Professional Conduct in ch. A-E 8, Wis. Adm. Code; and that, to the best of my knowledge, all information contained in this document is correct and the document was prepared in compliance with all applicable requirements in chs. NR 700 to 726, Wis. Adm. Code.

Wesley L. May, PE. (Wisconsin License No. 35887)

I, John Roberts, hereby certify that I am a hydrogeologist as that term is defined in s. NR 712.03(1), Wis. Adm. Code, am registered in accordance with the requirements of ch. GHSS 2, Wis. Adm. Code, or licensed in accordance with the requirements of ch. GHSS 3, Wis. Adm. Code, and that, to the best of my knowledge, all information contained in this document is correct and the document was prepared in compliance with all applicable requirements in chs. NR 700 to 726, Wis. Adm. Code.

John Roberts, PG. (Wisconsin License No. 17)

Environmental Resources Management, Inc.

700 W. Virginia St., Ste 601

Milwaukee, WI 53204

© Copyright 2020 by ERM Worldwide Group Ltd and / or its affiliates ("ERM").
All rights reserved. No part of this work may be reproduced or transmitted in any form, or by any means, without the prior written permission of ERM

CONTENTS

1. INTRODUCTION 1
1.1 Site Information 1
1.1.1 Facility and Project Information 1
1.1.2 Responsible Party 1
1.1.3 Consultant 1
1.1.4 Site Location and Description 1
1.2 Site Summary 2
1.2.1 Summary of Release and Regulatory Status 2
1.2.2 Summary of Nature and Extent of Contamination 2
1.2.3 Summary of SVE Pilot Test 2
1.2.4 Remedial Actions Selected 3
2. SOIL VAPOR EXTRACTION SYSTEM DESIGN 3
2.1 Regulatory Standard 3
2.2 Remedial Action Description 3
2.3 Treatment System Process Description 3
2.4 Treatment System Permitting 3
2.4.1 Air Permit 3
2.4.2 Other Permits 4
2.5 SVE System Design Documents 4
2.6 Treatment System Components 4
2.6.1 SVE Wells 4
2.6.2 Conveyance Piping 4
2.6.3 Knock-out Tank 4
2.6.4 SVE Blower 5
2.6.5 SVE Discharge 5
2.6.6 System Controls & Failsafes 5
3. SYSTEM OPERATION, MAINTENANCE, AND MONITORING 5
3.1 Shakedown, Startup, and Operation 5
3.2 Routine Maintenance 5
3.3 Performance Monitoring 6
3.3.1 SVE System 6
3.3.2 Groundwater Monitoring 6
3.4 Reporting 6
4. ANTICIPATED PROJECT SCHEDULE 6

APPENDIX A DESIGN DRAWINGS
APPENDIX B DESIGN SPECIFICATIONS

List of Figures

Figure 1 Site Location Map
Figure 2 TCE Sub-slab Sample Results

Acronyms and Abbreviations

Name	Description
BRRTS	Bureau for Remediation and Redevelopment Tracking System
ERM	Environmental Resources Management, Inc.
ES	Enforcement Standard
ft bgs	Feet Below Ground Surface
µg/kg	Micrograms per Kilogram
µg/l	Micrograms per Liter
RCL	Residual Contaminant Level
SSC	Subsurface clearance
WAC	Wisconsin Administrative Code
WDNR	Wisconsin Department of Natural Resources

1. INTRODUCTION

Environmental Resources Management, Inc. (ERM) has prepared this Remedial Design Report on behalf of 910 Mayer, LLC (formerly Aldrich Chemical Company, LLC). The purpose of this report is to present design details for the proposed soil vapor extraction (SVE) system as required by Chapter NR 724 of the Wisconsin Administrative Code (WAC). This report includes general site information, a summary of the discovery of the release and the subsequent site investigation, details regarding the proposed SVE system, summary of anticipated operations, maintenance and monitoring activities, and the anticipated schedule for the project.

1.1 Site Information

1.1.1 Facility and Project Information

910 Mayer, LLC

910 Mayer Ave

Madison, WI

BRRTS No.: 02-13-580723

1.1.2 Responsible Party

Mr. Robert Hassler

910 Mayer LLC

15 Reservoir Road

White Plains, NY 10603

Phone: (914) 719-6076

Email: rhassler@reichbrothers.com

1.1.3 Consultant

Mr. David de Courcy-Bower

Environmental Resources Management, Inc.

700 West Virginia St., Suite 601

Milwaukee, WI 53204

Phone: (414) 977 4705

Email: david.decourcybower@erm.com

1.1.4 Site Location and Description

The Site is located at 910 Mayer Avenue in Madison, Wisconsin. The Site is located in the NE ¼ of the SW ¼ of Section 31, Township 08 North, Range 10 East in Dane County, Wisconsin. The location of the Site is shown on Figure 1, developed from the United States Geological Survey (USGS) 7.5-minute quadrangle for Madison East dated 1983.

1.2 Site Summary

1.2.1 Summary of Release and Regulatory Status

ERM performed a Phase II ESA on behalf of 910 Mayer LLC in connection with its diligence activities regarding potential acquisition of the property. The Phase II included 63 soil borings, numerous soil and groundwater samples, and 16 sub-slab vapor samples. ERM disclosed the results of the Phase II investigation to 910 Mayer LLC, who forwarded them to Kraft Heinz Food Company ("Kraft Heinz"), the property owner at the time. Kraft Heinz shared the results with Ramboll-Environ, who, on behalf of Kraft Heinz, reported three notifications of release to the WDNR on October 19, 2017. 910 Mayer LLC purchased the property on October 18, 2017. Subsequently, ERM followed up with the WDNR and became aware that the WDNR had not received the three notifications due to the size of the electronic notifications. Therefore, ERM forwarded the three notifications of release to the WDNR on November 29, 2016. 910 Mayer LLC had previously informed the WDNR in a letter dated October 30, 2017 that they had acquired the Site, effective October 18, 2017. The former Spice Room notification of release relates to concentrations of CVOCs detected in sub-slab soil gas samples collected in and around the former Spice Room located in Building 43 (BRRTs# 02-13-580723).

1.2.2 Summary of Nature and Extent of Contamination

Based on investigations completed, the primary concern for the former Spice Room is concentrations of TCE in sub-slab samples that exceed WDNR sub-slab vapor criteria. Sub-slab sampling results are shown on Figure 2. Based on the investigations completed, the TCE appears to be present in shallow vadose zone fill materials that underlie the former Spice Room and Building 43. The extent of soil gas, soil, and groundwater impacts has been sufficiently defined. The results of the site investigation are summarized in the *Site Investigation Data* submitted to the WDNR on June 17, 2019, the *Remediation Technology Screening* submitted to the WDNR on December 9, 2019, and the *Summary of Soil Vapor Extraction Pilot Test – Former Spice Room* submitted on May 28, 2020. A *Site Investigation Complete Determination – Former Spice Room* letter was provided by the WDNR on April 27, 2020.

1.2.3 Summary of SVE Pilot Test

SVE pilot testing was completed in March of 2020 near the former Spice Room in Building 43. A detailed summary of the SVE pilot test results titled *Summary of Soil Vapor Extraction Pilot Test – Former Spice Room* was submitted to the WDNR on May 28, 2020.

The SVE pilot testing consisted of step tests at three SVE well locations (SVE-1, SVE-2 and SVE-3). The step tests were performed by incrementally closing the make-up air valve to determine the change in radius of influence (ROI) at different applied vacuums and flow rates. Each of the three SVE wells were operated independently to determine the ROI in each zone at the site. After the completion of each individual test run, all three SVE wells were operated simultaneously.

A design ROI was calculated for each of the three SVE wells to support the full-scale design of the SVE system (shown in table below).

Zone	ROI (ft)
1 (SVE-01)	50
2 (SVE-02)	35
3 (SVE-03)	25

The full-scale design is based on the results of the SVE pilot testing and the calculated ROIs for each zone of the treatment area.

1.2.4 Remedial Actions Selected

Remedial technology screening presented in the *Remediation Technology Screening* submitted to the WDNR on December 9, 2019 concluded that SVE was the preferred remedial alternative to address the subsurface impacts.

- Soil and Sub-Slab Vapor – Due to the elevated sub-slab concentrations of TCE it was determined that SVE was required to mitigate vadose zone soils and address sub-slab vapor concerns.
- Groundwater – due to the relatively low level concentration of TCE in shallow groundwater no active remediation is required. Quarterly groundwater monitoring will be conducted to confirm that the remaining soil impacts will not further degrade groundwater quality.

Based on the selected approach, the following section describes the SVE system.

2. SOIL VAPOR EXTRACTION SYSTEM DESIGN

2.1 Regulatory Standard

Sub-slab soil vapor concentrations under Building 43 exceed the WDNR Vapor Risk Screening Levels (VRSLs) for large commercial/industrial uses. The goal of the SVE system is to achieve the WAC NR 726 site closure requirements to reduce vadose zone soil impacts such that the large commercial/industrial VRSL can appropriately be managed. Once the vadose zone soil concentrations have reduced a request to either shut down the SVE system or transition to a sub-slab depressurization system will occur. A monitored natural attenuation evaluation will be completed to evaluate groundwater conditions relative to WAC NR 140 standards.

2.2 Remedial Action Description

The purpose of the SVE system is to remove TCE mass by extracting soil vapors from beneath Building 43. TCE in the vadose zone soils will be removed during vapor extraction. This will be accomplished by installation of SVE extraction wells, conveyance piping and an SVE system to the south of Building 43.

2.3 Treatment System Process Description

The system will consist of 20 SVE wells focused on the areas with WDNR VRSL exceedances, as shown on Drawing M01 in Appendix A. Each SVE well will be installed beneath the Building 43 concrete slab and connected to a header pipe to the SVE system. At the SVE system, the air will pass through a knock-out tank to remove water, through the SVE blower and then will then be discharged to air with a stack to be located above the adjacent building. Based on the results of the pilot test the anticipated flow rate for the SVE system is 225 SCFM.

2.4 Treatment System Permitting

2.4.1 Air Permit

An air permit review was conducted to determine if the discharge from the SVE system is exempt from permitting. The total VOC emissions is estimated to be 0.33 lb/hr or 2,891 lb/yr based on 8,760 hours SVE operation per year. Based on this value it was determined that the discharge from the SVE system is exempt from a construction permit. 910 Mayer submitted a *Construction Permit Exemption Application* to

the WDNR on June 30, 2020. Approval of the construction permit exemption was granted on August 11, 2020.

2.4.2 Other Permits

The subcontractor selected to complete the system installation will be responsible for obtaining all required construction permits form the City of Madison.

Excess soils generated will be appropriately disposed of under an approved waste disposal manifest.

Groundwater will be appropriately disposed of to the sanitary sewer under an approved groundwater disposal permit from the City of Madison/MMSD.

2.5 SVE System Design Documents

The groundwater treatment system design package consists of the following, which are included as appendices to this Remedial Design Report.

- Design Drawings – Appendix A
- Specifications – Appendix B

2.6 Treatment System Components

2.6.1 SVE Wells

Prior to initiation of subsurface activities, ERM will contact Diggers Hotline to request marking of public utilities in the areas that will be disturbed during system installation. As part of ERM's subsurface clearance (SSC) process, a private utility locator will be contracted to identify private utilities that may also be present within the areas that will be disturbed. The target zone for the SVE wells is the vadose zone soils beneath Building 43. Therefore, installation of the SVE wells will likely be to less than fout feet below the concrete slab. Soil generated during installation will be containerized. Soil will be transported and disposed of offsite. The SVE wells will each be completed at the surface with a well vault for access if needed.

2.6.2 Conveyance Piping

The above-grade conveyance piping will consist of three primary header pipes, one routed from the SVE system to the SVE wells located in the northern portion of Building 43, a second routed to the SVE wells located in the southwest of portion of Building 43 and a third routed to the SVE well located in the southeast portion of Building 43. Each header pipe will be primarily constructed of Schedule 80 PVC, except the lower sections that will be constructed of carbon steel. The extraction wells will be connected to the appropriate header pipe using 3 to 4-inch diameter Schedule 80 PVC or carbon steel piping, as shown on the design drawings in Appendix B.

2.6.3 Knock-out Tank

From the header pipes the extracted vapors from each header pipe will be monitored with air flow meters and gauges and discharge into a 117-gallon moisture knock-out tank. The knock-out tank is designed to remove water from the SVE system air stream prior to entry into the SVE blower. The knock-out tank will connected to a 500-gallon poly storage tank used to store accumulated water, if needed. Accumulated water would be discharged to the sanitary sewer as approved for groundwater by MMSD and the City of Madison.

2.6.4 SVE Blower

The SVE blower will consist of a 10 HP regenerative blower capable of delivering upto 300 SCFM of flow.

2.6.5 SVE Discharge

The SVE system discharge will be via a steel stack attached to and extend at least 5 feet above an adjacent building. The discharge is exempt from permitting as previously described in Section 2.4.1.

2.6.6 System Controls & Failsafes

The SVE system will be equipped with a programmable logic controller (PLC) which will be used to operate the system based on the inputs from the various instruments located in the SVE system building. The system will be equipped with both digital/analog and mechanical failsafes that will shut down the system if it is operating outside of standard operating conditions. The system will also be equipped with an autodialer that will automatically contact the system operators if the system has shut down.

3. SYSTEM OPERATION, MAINTENANCE, AND MONITORING

3.1 Shakedown, Startup, and Operation

Following completion of system construction, the SVE system will go through a shakedown process to confirm that the system will function as it was designed. For example, the SVE blower will be tested to check for proper rotation and electronic controls (e.g. level switches) will be checked for proper function and initiation of alarm conditions.

Following shakedown, system startup will occur. During startup, system components will be brought online. The SVE extraction wells will be balanced and system readings will be collected during this time to establish initial operation conditions, and adjustments to the system will be made to optimize operation.

Once the system is optimized and functioning properly, the system will be checked periodically to visually inspect the system, record operational data, and to perform routine maintenance. In addition to routine inspections, the system will be equipped with an autodialer to contact the operators if the system shuts down. This will help to minimize downtime by informing personnel that the system is in need of maintenance.

3.2 Routine Maintenance

The system will require routine maintenance to keep it in good working order. The operator(s) will conduct the following general operational tasks on a routine basis:

- Record system readings;
- Inspect the SVE system components;
- Inspect and empty water storage tank if needed;
- Inspect the discharge stack.

An Operations and Maintenance Plan will be prepared in accordance with the requirements of NR 724 including a description of normal operation and maintenance activities, frequency of operations, and routine maintenance tasks.

3.3 Performance Monitoring

The Operation and Maintenance Plan for the SVE system will include additional details regarding the monitoring of the SVE system and sub-slab vapor and groundwater conditions, including a list of analytes and the analytical methods. The following is a summary of the anticipated sampling program.

3.3.1 SVE System

910 Mayer will sample the SVE system discharge on a monthly basis to estimate mass removal, analyze concentration trends, and to evaluate effectiveness of the SVE system. A sample for laboratory analysis will be collected immediately downstream of the SVE blower. The collected samples will be submitted to a certified laboratory for the analysis of VOCs.

3.3.2 Groundwater Monitoring

Groundwater sampling will be conducted on a quarterly basis for the four monitoring wells. Collected groundwater will be submitted to a certified laboratory for analysis of VOCs.

- Quarterly – Monitoring wells SR-MW-14, SR-MW-15, SR-MW-16A and SR-MW-16B.

A more detailed discussion of long-term monitoring will be included in the Operations and Maintenance Plan, to be submitted prior to startup of the system.

3.4 Reporting

Within 60 days of completion of the system installation and startup testing, a Construction Documentation Report will be submitted to the WDNR. The report will be prepared in accordance with the requirements of NR724, and will document the system installation activities.

Progress reports will be submitted to the WDNR on a semi-annual basis. The reports will summarize the system operations during the reporting period, analytical data collected from the SVE system to support system effectiveness, and planned O&M activities.

4. ANTICIPATED PROJECT SCHEDULE

The following is the anticipated schedule of activities for the implementation of the SVE remedy.

Task	Schedule
Submit Remedial Design Report to WDNR	August 11, 2020
Receive WDNR Approval of Design Report	August 18, 2020
Submit Operation and Maintenance Plan to WDNR	September 25, 2020
Installation of Extraction and Treatment System	August 24 – September 25, 2020
System Shakedown and Startup	September 26 – 31, 2020

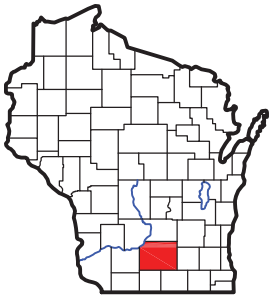

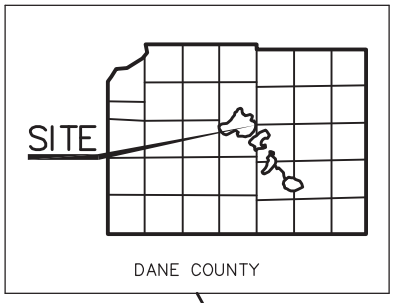

SECTION 31
T.8N. – R.10E.
CITY OF MADISON
DANE COUNTY
WISCONSIN

N

0 2000
SCALE (IN FEET)

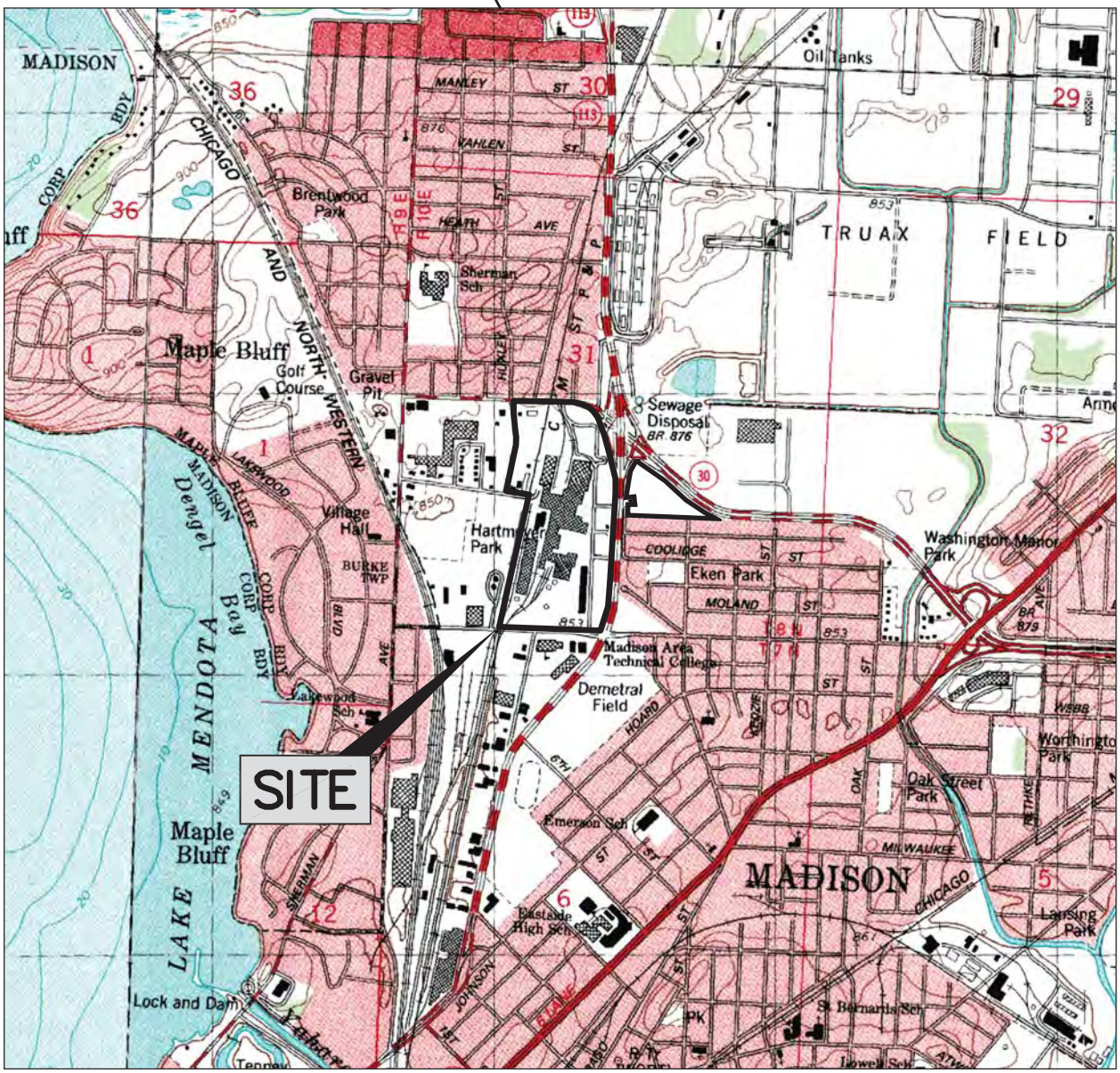

ADAPTED FROM USGS
MADISON EAST/1983

REVISIONS ARE TO BE MADE ON THE CADD FILE ONLY

ERM®

SITE LOCATION MAP

910 MAYER AVENUE
MADISON, WISCONSIN

Environmental Resources Management

CADD Review	RMK
CHK'D	CS
	0441161
Drawn By GML 9/27/17	FIGURE 1

Q:\Team\DMM\ClntQ-T\Reich Brothers\0403363\0403363-SLM.dwg, SLM, 9/27/2017 2:16:43 PM, GML

TCE SUB-SLAB SAMPLE RESULTS
BUILDING 43 AND 71

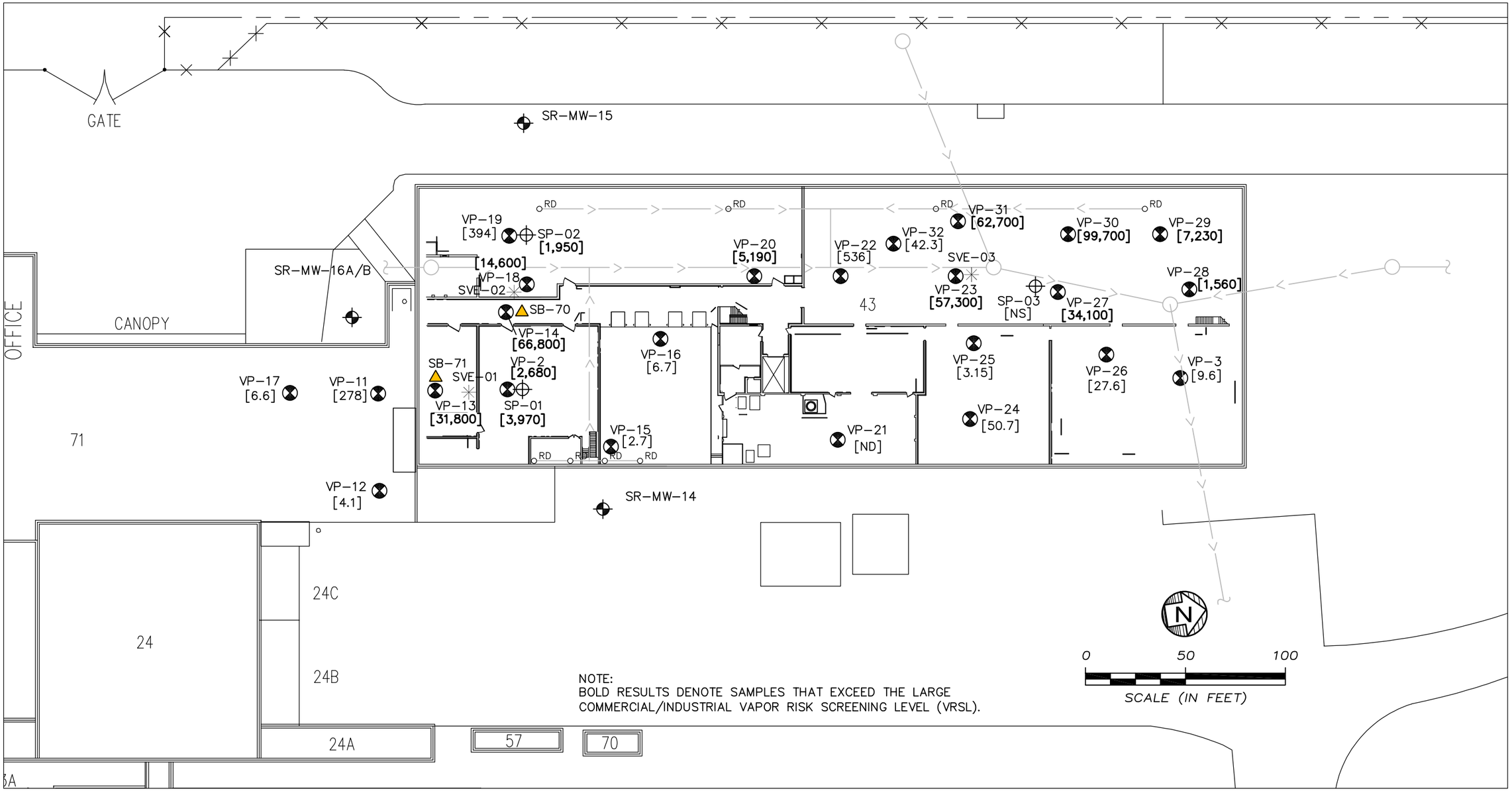

NOTE:
BOLD RESULTS DENOTE SAMPLES THAT EXCEED THE LARGE COMMERCIAL/INDUSTRIAL VAPOR RISK SCREENING LEVEL (VRSL).

LEGEND

- SUB-SLAB LOCATION
- [927] TCE SOIL GAS RESULTS (MICROGRAMS PER CUBIC METER – ug/m^3)
- SOIL VAPOR EXTRACTION WELL
- SOIL VAPOR PROBES
- STORM SEWER
- STORM MANHOLE
- RD ROOF DRAIN
- MONITORING WELL
- SOIL BORING

Drawn By GML	ERM®	**910 MAYER LLC** 910 MAYER AVENUE MADISON, WISCONSIN	CHK'D RP
CADD Review FGB			0441161
Date Drawn/Rev'd 8/14/17 – 4/9/20		Environmental Resources Management	FIGURE 2

APPENDIX A DESIGN DRAWINGS

SOIL VAPOR EXTRACTION SYSTEM DESIGN
MAY 2020

Former Spice Room Area
910 Mayer Avenue
Madison, WI

INDEX OF DRAWINGS

DRAWING NO.	DESCRIPTION
G-01	COVER SHEET
M-01	SITE LAYOUT PLAN
M-02	SYSTEM PIPING PLAN
M-03	MECHANICAL DETAILS
M-04	MECHANICAL DETAILS
P-01	PIPING & INSTRUMENTATION DIAGRAM LEGEND
P-02	PIPING & INSTRUMENTATION DIAGRAM
E-01	ELECTRICAL TITLE SHEET
E-02	ELECTRICAL NOTES AND LEGEND
E-03	SINGLE-LINE DIAGRAM

DISCLAIMER ON USE

THESE DESIGN DOCUMENTS, ALSO REFERRED TO AS INSTRUMENTS OF SERVICE, ARE INTENDED SOLELY FOR USE AS PRESCRIBED AT THE IDENTIFIED SITE AND SHALL NOT BE MODIFIED, REVISED, OR ALTERED, OR IMPLEMENTED IN WHOLE OR IN PART IN ANY MANNER OTHER THAN AS PRESENTED WITHOUT THE EXPRESS REVIEW AND WRITTEN AGREEMENT OF ERM CONSULTING & ENGINEERING , INC. (ERM CEI). SPECIFICALLY, ERM CEI SHALL NOT BE RESPONSIBLE FOR THE ACCURACY, COMPLETENESS OR WORKABILITY OF THE DESIGN DOCUMENTS IF THEY ARE CHANGED, REVISED OR AMENDED IN ANY MANNER BY ANY PARTY OTHER THAN ERM CEI. USE WITHOUT THE EXPRESS PERMISSION OF ERM CEI FOR OTHER SITES OR SITUATIONS IS LIKEWISE PROHIBITED.

REV	DATE	REVISION	APPR'D	REV BY
0	07/29/2020	ISSUED FOR AGENCY REVIEW	AMC	WLM

ERM

COVER SHEET

SCALE	DESIGNED BY	DRAWN BY	DRAWING NUMBER
NOT TO SCALE	AMC	MSF	0441161-01
DATE 3/7/2019	CHECKED WLM	APPROVED AMC	JOB NUMBER 0441161

REV 0

SHEET 1 OF 8

Former Spice Room Area
910 Mayer Avenue
Madison, WI

DISCIPLINE NO. G-01

ENVIRONMENTAL RESOURCES MANAGEMENT

ISSUED FOR AGENCY REVIEW

IF SHEET IS LESS THAN 24"x36"
IT IS A REDUCED PRINT -
SCALE REDUCED ACCORDINGLY.

HTX: Y:\ClntM-P\910 Mayer LLC\0441161\Task 2 - Former Spice Room\0441161-01_Cover.dwg, 7/29/2020

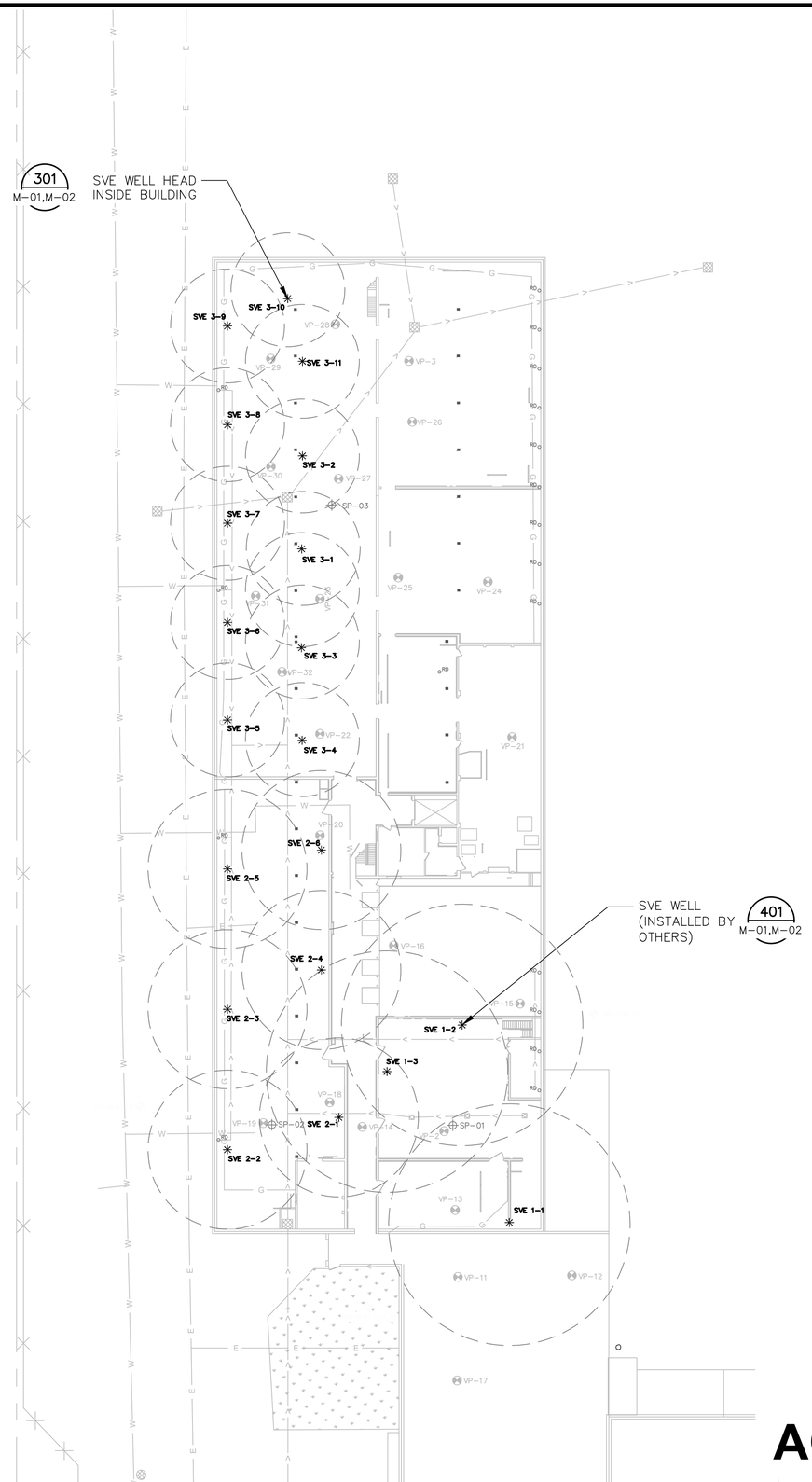

LEGEND

- EXISTING BUILDING/WALL
- EXISTING WATER LINE
- EXISTING STORM SEWER
- EXISTING ELECTRIC LINE
- EXISTING ELECTRIC GROUND LINE
- EXISTING GRASSY AREA
- VP-26 SUB-SLAB LOCATION
- SP-03 SOIL VAPOR PROBES
- EXISTING STORM INLET
- EXISTING FLOOR DRAIN
- RD EXISTING ROOF DRAIN
- EXISTING MONITORING WELL
- EXISTING BUILDING COLUMN
- SVE 3-9 SOIL VAPOR EXTRACTION WELL
- ESTIMATED RADIUS OF INFLUENCE

SOIL VAPOR EXTRACTION (SVE) SYSTEM NOTES:

1. SVE WELLS TO BE INSTALLED BY OTHERS.
2. SVE WELLS WILL REQUIRE FITTINGS (e.g., TEE, WYE, ETC.) FOR CONNECTIONS.
3. SYSTEM TO INCLUDE FLOW MEASUREMENT AND SAMPLING PORTS.
4. SVE EQUIPMENT LOCATIONS ARE APPROXIMATE. FINAL LOCATION TO BE FIELD DETERMINED.
5. SYSTEM EFFLUENT TO BE EXHAUSTED ABOVE BUILDING ROOF AND AWAY FROM HANDLING UNITS.

NOTES:

1. ALL WORK SHALL CONFORM TO THE BUILDING, FIRE, AND SAFETY CODES, THE ORDINANCES, AND THE RULES AND REGULATIONS OF ANY LEGAL BODY HAVING JURISDICTION. THE CONTRACTOR SHALL OBTAIN AND PAY FOR ALL PERMITS AND INSPECTIONS REQUIRED.
2. CONTRACTOR IS RESPONSIBLE FOR CONDUCTING CLEARANCE OF BOTH PUBLIC AND PRIVATE UTILITIES PRIOR TO INITIATING SUBSURFACE CONSTRUCTION ACTIVITIES, AND IS RESPONSIBLE FOR REPAIR OF ALL KNOWN UTILITIES DAMAGED DURING INSTALLATION.
3. SVE PIPING SHALL BE INSTALLED WITH A SLOPE OF 1/8" PER FOOT TOWARDS THE WELL POINT (ABOVE AND BELOW-GRADE).
4. EXISTING PIPE RACKS (IF PRESENT) SHALL BE USED TO ROUTE PIPING WHERE APPROPRIATE. FINAL ROUTING OF PIPING TO BE DETERMINED IN FIELD AND APPROVED BY OWNER AND ENGINEER.
5. THE DISCHARGE STACK PIPE SHALL TERMINATE A MINIMUM OF 5 FEET ABOVE THE ROOF OF THE MAIN BUILDING OR 12-INCHES ABOVE ANY PARAPET (WHICHEVER IS HIGHER), AND A MINIMUM OF 25 FEET AWAY FROM ANY WINDOW, DOOR, HVAC SYSTEM, OR OTHER OPENING INTO THE OCCUPIED SPACES OF THE BUILDING.
6. TREATMENT SYSTEM SHALL BE PLACED AS CLOSE AS POSSIBLE TO EXTERIOR WALL OF BUILDING. INTERIOR PIPING SHALL PASS THROUGH WALLS OF MAIN BUILDING AND TREATMENT BUILDING.
7. EXTERIOR PIPING SHALL BE INSULATED WITH NBR/PVC OR FIBERGLASS INSULATION TO PROTECT FROM FREEZING.
8. ROUTING OF PIPING AND PLACEMENT OF TREATMENT BUILDING SHALL ALLOW ACCESS TO OVERHEAD DOOR FOLLOWING INSTALLATION. ROUTING OF PIPING SHALL ALLOW ACCESS TO TREATMENT ROOM FOLLOWING INSTALLATION.
9. FOR CLARITY, THE PIPING ON THE DRAWING HAS BEEN PRESENTED AS A GENERAL SCHEMATIC AND IS NOT REPRESENTATIVE OF ACTUAL SPACING BETWEEN PIPING. CONTRACTOR SHALL INSTALL PIPING IN A MANNER THAT WILL LIMIT THE SPACE REQUIRED.

DISCLAIMER ON USE

THESE DESIGN DOCUMENTS, ALSO REFERRED TO AS INSTRUMENTS OF SERVICE, ARE INTENDED SOLELY FOR USE AS PRESCRIBED AT THE IDENTIFIED SITE AND SHALL NOT BE MODIFIED, REVISED, OR ALTERED, OR IMPLEMENTED IN WHOLE OR IN PART IN ANY MANNER OTHER THAN AS PRESENTED WITHOUT THE EXPRESS REVIEW AND WRITTEN AGREEMENT OF ERM CONSULTING & ENGINEERING, INC. (ERM CEI). SPECIFICALLY, ERM CEI SHALL NOT BE RESPONSIBLE FOR THE ACCURACY, COMPLETENESS OR WORKABILITY OF THE DESIGN DOCUMENTS IF THEY ARE CHANGED, REVISED OR AMENDED IN ANY MANNER BY ANY PARTY OTHER THAN ERM CEI. USE WITHOUT THE EXPRESS PERMISSION OF ERM CEI FOR OTHER SITES OR SITUATIONS IS LIKEWISE PROHIBITED.

N

0 30' 60'
SCALE

ISSUED FOR AGENCY REVIEW

IF SHEET IS LESS THAN 24"x36"
IT IS A REDUCED PRINT -
SCALE REDUCED ACCORDINGLY.

REV	DATE	REVISION	APPR'D	REV BY
0	07/29/2020	ISSUED FOR AGENCY REVIEW	AMC	WLM

ERM

SITE LAYOUT PLAN

REV 0

SCALE	DESIGNED BY	DRAWN BY	DRAWING NUMBER
AS SHOWN	AMC	DF	0441161-02
DATE	CHECKED	APPROVED	JOB NUMBER
6/4/2020	WLM	AMC	0441161

SHEET 2 OF 7

Former Spice Room Area
910 Mayer Avenue
Madison, WI

DISCIPLINE NO. M-01

ENVIRONMENTAL RESOURCES MANAGEMENT

HTX: Y:\Clnt\M-P\910 Mayer LLC\0441161\Task 2 - Former Spice Room\0441161-02_Layouts.dwg, 7/29/2020

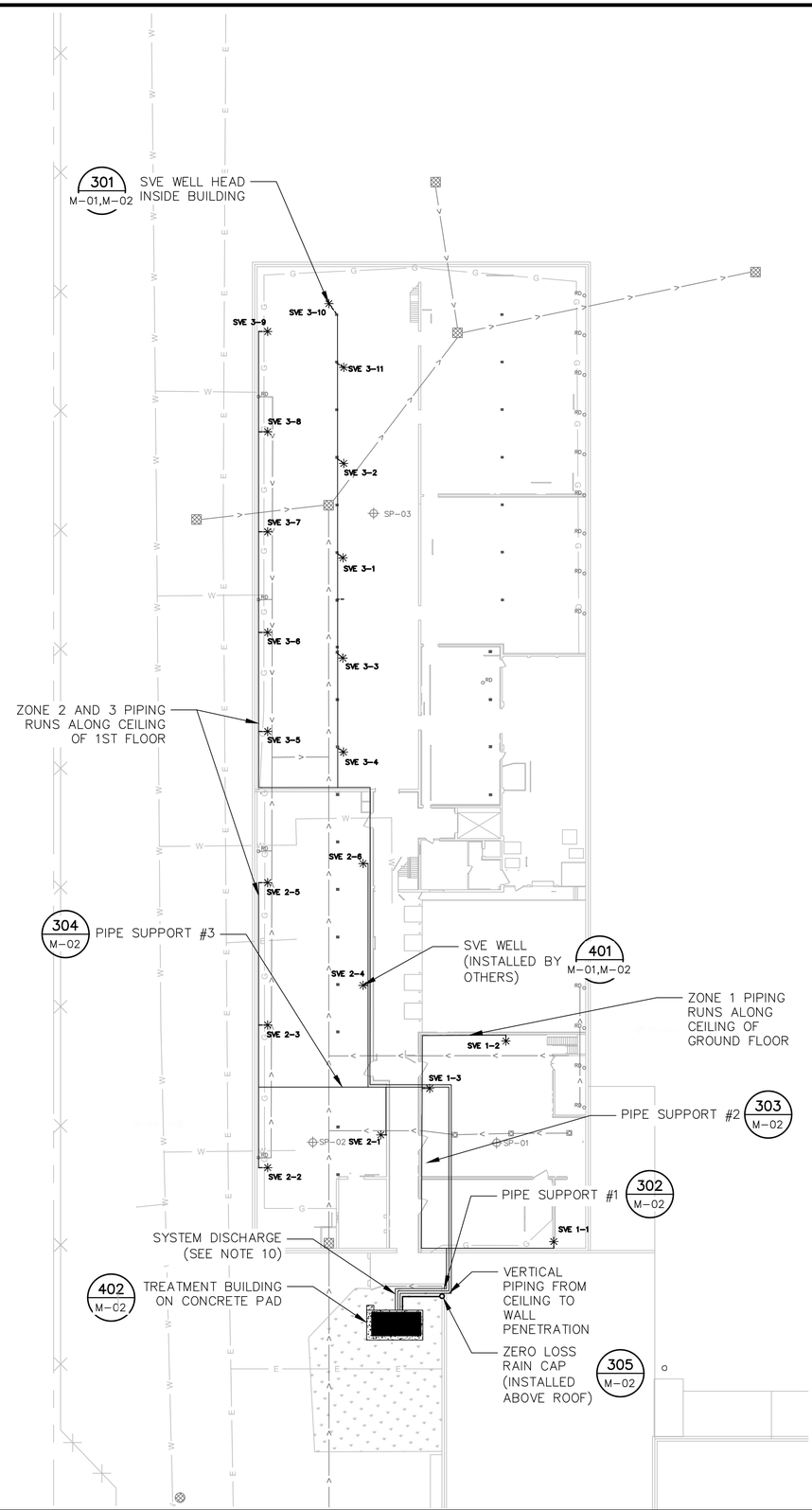

LEGEND

- EXISTING BUILDING/WALL
- EXISTING WATER LINE
- EXISTING STORM SEWER
- EXISTING ELECTRIC LINE
- EXISTING ELECTRIC GROUND LINE
- EXISTING GRASSY AREA
- SP-03 SOIL VAPOR PROBES
- EXISTING STORM INLET
- EXISTING FLOOR DRAIN
- EXISTING ROOF DRAIN
- EXISTING MONITORING WELL
- EXISTING BUILDING COLUMN
- SVE 3-9 SOIL VAPOR EXTRACTION WELL
- TREATMENT BUILDING
- OVERHEAD PIPING
- UNDERGROUND PIPING

SOIL VAPOR EXTRACTION (SVE) SYSTEM NOTES:

1. SVE WELLS TO BE INSTALLED BY OTHERS.
2. SVE WELLS WILL REQUIRE FITTINGS (e.g., TEE, WYE, ETC.) FOR CONNECTIONS.
3. SYSTEM TO INCLUDE FLOW MEASUREMENT AND SAMPLING PORTS.
4. SVE EQUIPMENT LOCATIONS ARE APPROXIMATE. FINAL LOCATION TO BE FIELD DETERMINED.
5. SYSTEM EFFLUENT TO BE EXHAUSTED ABOVE BUILDING ROOF AND AWAY FROM AIR HANDLING UNITS.

NOTES:

1. ALL WORK SHALL CONFORM TO THE BUILDING, FIRE, AND SAFETY CODES, THE ORDINANCES, AND THE RULES AND REGULATIONS OF ANY LEGAL BODY HAVING JURISDICTION. THE CONTRACTOR SHALL OBTAIN AND PAY FOR ALL PERMITS AND INSPECTIONS REQUIRED.
2. CONTRACTOR IS RESPONSIBLE FOR CONDUCTING CLEARANCE OF BOTH PUBLIC AND PRIVATE UTILITIES PRIOR TO INITIATING SUBSURFACE CONSTRUCTION ACTIVITIES, AND IS RESPONSIBLE FOR REPAIR OF ALL KNOWN UTILITIES DAMAGED DURING INSTALLATION.
3. SVE PIPING SHALL BE INSTALLED WITH A SLOPE OF 1/8" PER FOOT TOWARDS THE WELL POINT (ABOVE AND BELOW-GRADE).
4. EXISTING PIPE RACKS (IF PRESENT) SHALL BE USED TO ROUTE PIPING WHERE APPROPRIATE. FINAL ROUTING OF PIPING TO BE DETERMINED IN FIELD AND APPROVED BY OWNER AND ENGINEER.
5. THE DISCHARGE STACK PIPE SHALL TERMINATE A MINIMUM OF 5 FEET ABOVE THE ROOF OF THE MAIN BUILDING OR 12-INCHES ABOVE ANY PARAPET (WHICHEVER IS HIGHER), AND A MINIMUM OF 25 FEET AWAY FROM ANY WINDOW, DOOR, HVAC SYSTEM, OR OTHER OPENING INTO THE OCCUPIED SPACES OF THE BUILDING.
6. TREATMENT SYSTEM SHALL BE PLACED AS CLOSE AS POSSIBLE TO EXTERIOR WALL OF BUILDING. INTERIOR PIPING SHALL PASS THROUGH WALLS OF MAIN BUILDING AND TREATMENT BUILDING.
7. EXTERIOR PIPING SHALL BE INSULATED WITH NBR/PVC OR FIBERGLASS INSULATION TO PROTECT FROM FREEZING.
8. ROUTING OF PIPING AND PLACEMENT OF TREATMENT BUILDING SHALL ALLOW ACCESS TO OVERHEAD DOOR FOLLOWING INSTALLATION. ROUTING OF PIPING SHALL ALLOW ACCESS TO TREATMENT ROOM FOLLOWING INSTALLATION.
9. FOR CLARITY, THE PIPING ON THE DRAWING HAS BEEN PRESENTED AS A GENERAL SCHEMATIC AND IS NOT REPRESENTATIVE OF ACTUAL SPACING BETWEEN PIPING. CONTRACTOR SHALL INSTALL PIPING IN A MANNER THAT WILL LIMIT THE SPACE REQUIRED.
10. ROUTE SYSTEM DISCHARGE VERTICALLY TO ROOF AND AFFIX STACK TO ROOF.

DISCLAIMER ON USE

THESE DESIGN DOCUMENTS, ALSO REFERRED TO AS INSTRUMENTS OF SERVICE, ARE INTENDED SOLELY FOR USE AS PRESCRIBED AT THE IDENTIFIED SITE AND SHALL NOT BE MODIFIED, REVISED, OR ALTERED, OR IMPLEMENTED IN WHOLE OR IN PART IN ANY MANNER OTHER THAN AS PRESENTED WITHOUT THE EXPRESS REVIEW AND WRITTEN AGREEMENT OF ERM CONSULTING & ENGINEERING, INC. (ERM CEI). SPECIFICALLY, ERM CEI SHALL NOT BE RESPONSIBLE FOR THE ACCURACY, COMPLETENESS OR WORKABILITY OF THE DESIGN DOCUMENTS IF THEY ARE CHANGED, REVISED OR AMENDED IN ANY MANNER BY ANY PARTY OTHER THAN ERM CEI. USE WITHOUT THE EXPRESS PERMISSION OF ERM CEI FOR OTHER SITES OR SITUATIONS IS LIKEWISE PROHIBITED.

N

0 30' 60'
SCALE

ISSUED FOR AGENCY REVIEW

IF SHEET IS LESS THAN 24"x36"
IT IS A REDUCED PRINT -
SCALE REDUCED ACCORDINGLY.

REV	DATE	REVISION	APPR'D	REV BY
0	07/29/2020	ISSUED FOR AGENCY REVIEW	AMC	WLM

ERM

SYSTEM PIPING PLAN

REV 0

SCALE	DESIGNED BY	DRAWN BY	DRAWING NUMBER
AS SHOWN	AMC	DF	0441161-02
DATE	CHECKED	APPROVED	JOB NUMBER
6/4/2020	WLM	AMC	0441161

SHEET 3 OF 7

Former Spice Room Area
910 Mayer Avenue
Madison, WI

DISCIPLINE NO. M-02

ENVIRONMENTAL RESOURCES MANAGEMENT

HTX: Y:\CIntM-P\910 Mayer LLC\0441161\Task 2 - Former Spice Room\0441161-02_Layouts.dwg, 7/29/2020

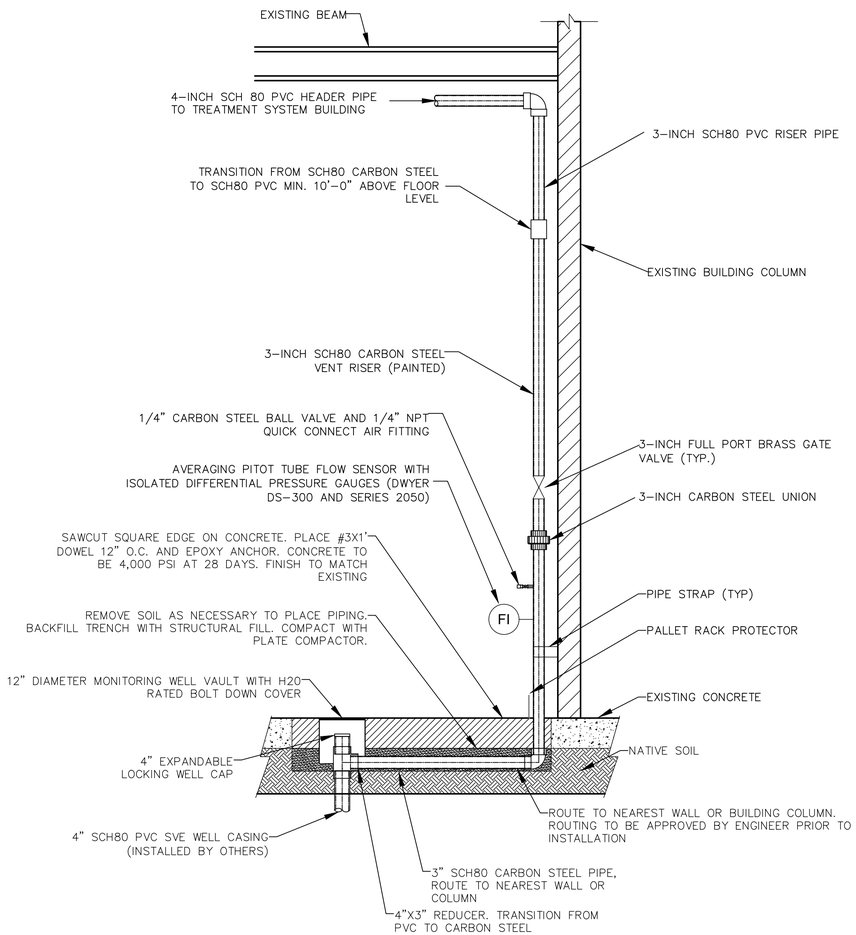

301 M-01,M-02 SVE WELL HEAD INSIDE BUILDING

NOT TO SCALE

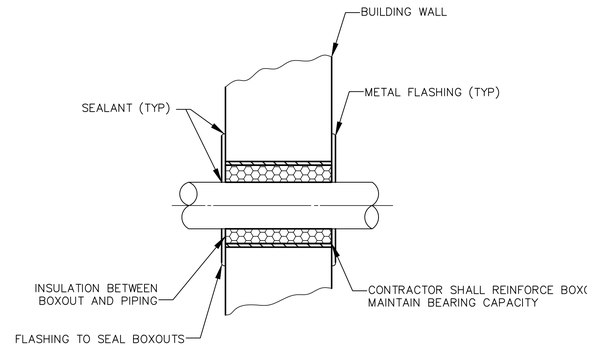

302 M-02 PIPE SUPPORT #1

NOT TO SCALE

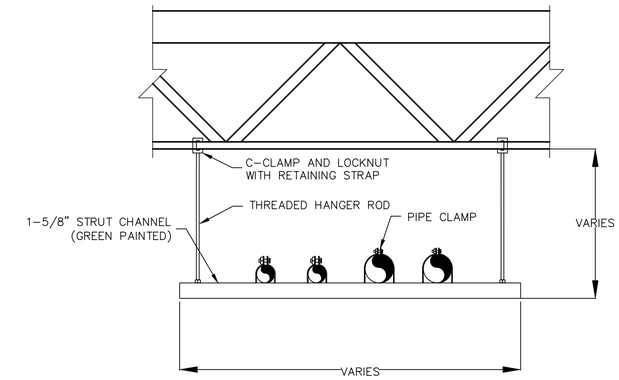

303 M-02 PIPE SUPPORT #2

NOT TO SCALE

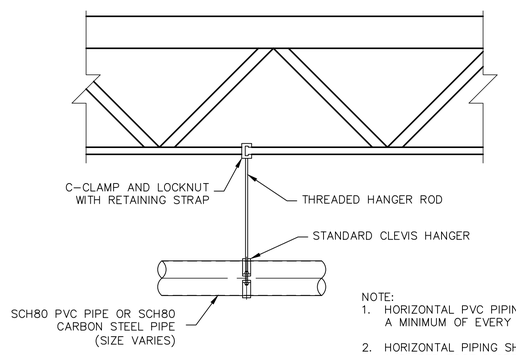

NOTE:
1. HORIZONTAL PVC PIPING SHALL BE SUPPORTED A MINIMUM OF EVERY 10 FEET.
2. HORIZONTAL PIPING SHALL BE INSTALLED WITH 1/8" PER FOOT SLOPE TOWARDS WELL.

304 M-02 PIPE SUPPORT #3

NOT TO SCALE

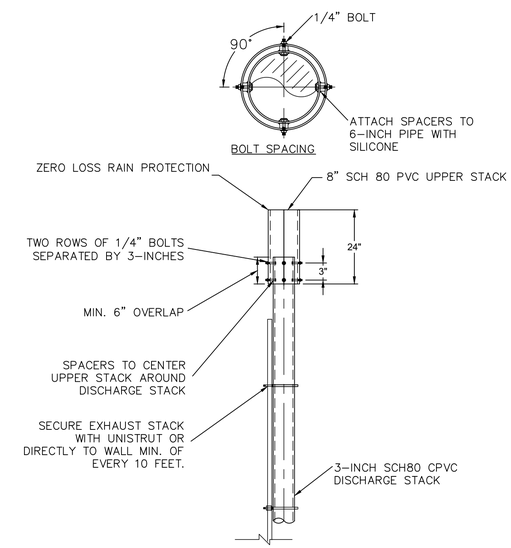

305 M-02 ZERO LOSS RAIN CAP

NOT TO SCALE

NOTES:

1. BELOW-GRADE CARBON STEEL PIPING SHALL BE WRAPPED WITH 20-MIL PROTECTIVE TAPE AND SLOPED AT 1/8" PER FOOT TOWARDS THE WELL.
2. ALL PIPING, VALVES AND FITTINGS SHALL BE RATED FOR A MINIMUM OF 100 PSI OPERATING PRESSURE AT 73 DEGREES FAHRENHEIT.

ISSUED FOR AGENCY REVIEW

IF SHEET IS LESS THAN 24"x36" IT IS A REDUCED PRINT - SCALE REDUCED ACCORDINGLY.

DISCLAIMER ON USE

THESE DESIGN DOCUMENTS, ALSO REFERRED TO AS INSTRUMENTS OF SERVICE, ARE INTENDED SOLELY FOR USE AS PRESCRIBED AT THE IDENTIFIED SITE AND SHALL NOT BE MODIFIED, REVISED, OR ALTERED, OR IMPLEMENTED IN WHOLE OR IN PART IN ANY MANNER OTHER THAN AS PRESENTED WITHOUT THE EXPRESS REVIEW AND WRITTEN AGREEMENT OF ERM CONSULTING & ENGINEERING, INC. (ERM CEI). SPECIFICALLY, ERM CEI SHALL NOT BE RESPONSIBLE FOR THE ACCURACY, COMPLETENESS OR WORKABILITY OF THE DESIGN DOCUMENTS IF THEY ARE CHANGED, REVISED OR AMENDED IN ANY MANNER BY ANY PARTY OTHER THAN ERM CEI. USE WITHOUT THE EXPRESS PERMISSION OF ERM CEI FOR OTHER SITES OR SITUATIONS IS LIKEWISE PROHIBITED.

REV	DATE	REVISION	APPR'D	REV BY
0	07/29/2020	ISSUED FOR AGENCY REVIEW	AMC	WLM

ERM

MECHANICAL DETAILS

REV 0

SCALE	DESIGNED BY	DRAWN BY	DRAWING NUMBER
NOT TO SCALE	AMC	MF	0441161-03
DATE	CHECKED	APPROVED	JOB NUMBER
6/5/2020	WLM	AMC	0441161

SHEET 4 OF 7

Former Spice Room Area
910 Mayer Avenue
Madison, WI

DISCIPLINE NO. M-03

ENVIRONMENTAL RESOURCES MANAGEMENT

HTX: Y:\ClntM-P\910 Mayer LLC\0441161\Task 2 - Former Spice Room\0441161-03_Mech.dwg, 7/29/2020

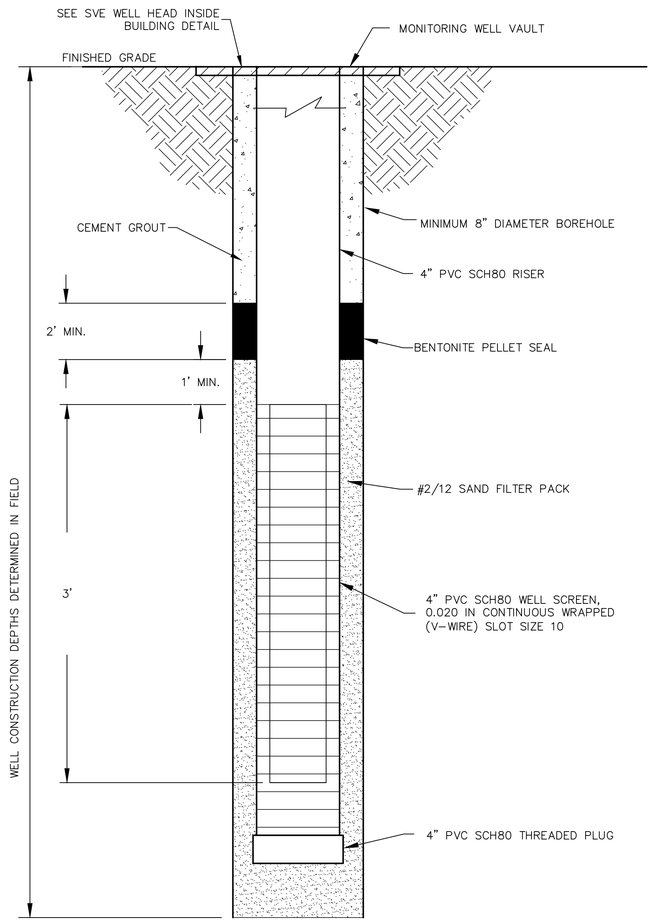

401 SVE WELL DETAIL (INSTALLED BY OTHERS)
M-01,M-02 NOT TO SCALE

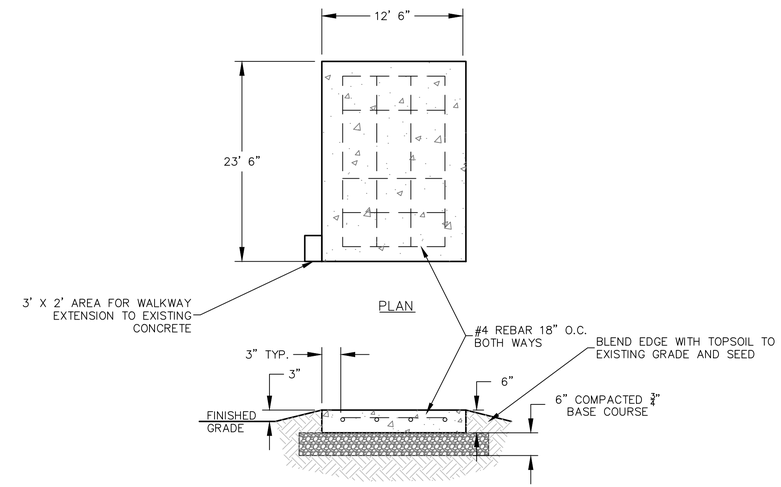

NOTES:

1. CONCRETE WORK SHALL CONFORM TO ALL REQUIREMENTS OF THE CURRENT ACI 301 "SPECIFICATIONS FOR STRUCTURAL CONCRETE FOR BUILDINGS" WITH THE FOLLOWING SUPPLEMENTAL REQUIREMENTS OR AS PROVIDED IN MANUFACTURER DRAWINGS.
   A. ALL CONCRETE SHALL BE NORMAL WEIGHT WITH AGGREGATES CONFORMING TO ASTM C33.
   B. COMPOUND AREA CONCRETE SHALL DEVELOP A MINIMUM 28-DAY COMPRESSIVE STRENGTH (F'c) OF 3,000 PSI.
   C. CHLORIDE BASED ADMIXTURES ARE PROHIBITED IN ALL REINFORCED CONCRETE OTHER ADMIXTURES SHALL CONFORM TO ASTM C494.
   D. REINFORCING STEEL SHALL BE DEFORMED AND CONFORM TO A615, A616 OR A617, GRADE 60 WITH A MINIMUM YIELD STRESS (Fy) OF 60,000 PSI. THE MINIMUM LAP FOR SPLICES SHALL BE 3'-6".
   E. CONCRETE COVER ON REINFORCING STEEL SHALL BE 3" UNLESS OTHERWISE NOTED
   F. MAXIMUM SLUMP SHALL BE 4" +/- 1" AS DETERMINED IN ACCORDANCE WITH ASTM C143.
   G. 6x6W5.5x25.5 WELDED WIRE MESH MAY BE SUBSTITUED FOR REBAR.
2. REFER TO VENDOR DRAWINGS FOR ANCHOR BOLT PATTERN, EQUIPMENT WEIGHT, AND LIFTING REQUIREMENTS.
3. TOPSOIL AND SEED TO EDGE OF CONCRETE PAD BLEND WITH EXISTING GRADE AS DIRECTED BY ENGINEER. REPLACE ANY EXISTING GRAVEL DISTURBED DURING INSTALLATION (ANTICIPATED LESS THAN 1 CY).

402 TREATMENT BUILDING PAD DETAIL
M-02 NOT TO SCALE

DISCLAIMER ON USE

THESE DESIGN DOCUMENTS, ALSO REFERRED TO AS INSTRUMENTS OF SERVICE, ARE INTENDED SOLELY FOR USE AS PRESCRIBED AT THE IDENTIFIED SITE AND SHALL NOT BE MODIFIED, REVISED, OR ALTERED, OR IMPLEMENTED IN WHOLE OR IN PART IN ANY MANNER OTHER THAN AS PRESENTED WITHOUT THE EXPRESS REVIEW AND WRITTEN AGREEMENT OF ERM CONSULTING & ENGINEERING, INC. (ERM CEI). SPECIFICALLY, ERM CEI SHALL NOT BE RESPONSIBLE FOR THE ACCURACY, COMPLETENESS OR WORKABILITY OF THE DESIGN DOCUMENTS IF THEY ARE CHANGED, REVISED OR AMENDED IN ANY MANNER BY ANY PARTY OTHER THAN ERM CEI. USE WITHOUT THE EXPRESS PERMISSION OF ERM CEI FOR OTHER SITES OR SITUATIONS IS LIKEWISE PROHIBITED.

NOTES:

1. BELOW-GRADE CARBON STEEL PIPING SHALL BE WRAPPED WITH 20-MIL PROTECTIVE TAPE AND SLOPED AT 1/8" PER FOOT TOWARDS THE WELL.
2. ALL PIPING, VALVES AND FITTINGS SHALL BE RATED FOR A MINIMUM OF 100 PSI OPERATING PRESSURE AT 73 DEGREES FAHRENHEIT.

ISSUED FOR AGENCY REVIEW

IF SHEET IS LESS THAN 24"x36" IT IS A REDUCED PRINT - SCALE REDUCED ACCORDINGLY.

REV	DATE	REVISION	APPR'D	REV BY
0	07/29/2020	ISSUED FOR AGENCY REVIEW	AMC	WLM

ERM

MECHANICAL DETAILS

SCALE	DESIGNED BY	DRAWN BY	DRAWING NUMBER
NOT TO SCALE	AMC	MF	0441161-03
DATE	CHECKED	APPROVED	JOB NUMBER
6/5/2020	WLM	AMC	0441161

REV 0

SHEET 5 OF 7

Former Spice Room Area
910 Mayer Avenue
Madison, WI

DISCIPLINE NO. M-04

ENVIRONMENTAL RESOURCES MANAGEMENT

HTX: Y:\Clnt\M-P\910 Mayer LLC\0441161\Task 2 - Former Spice Room\0441161-03_Mech.dwg, 7/29/2020

LEGEND

- MAIN PROCESS LINE
- BUILDING/AREA EXTENTS
- ELECTRIC (ELECTRONIC) SIGNAL
- FLEXIBLE HOSE
- BALL VALVE
- BUTTERFLY VALVE
- GATE VALVE
- SAMPLE/BLEED VALVE
- NEEDLE VALVE
- GLOBE VALVE
- KNIFE GATE VALVE
- SWING CHECK VALVE
- BALL CHECK VALVE
- SOLENOID OPERATED VALVE
- MOTOR OPERATED VALVE
- SAMPLE PORT
- PRESSURE REGULATING VALVE
- FLANGED CONNECTION/PIPE TRANSITION
- NON-FLANGED PIPE TRANSITION
- UNION
- REDUCER
- Y STRAINER
- PRESSURE RELIEF VALVE
- VACUUM RELIEF VALVE
- CAMLOCK
- HOSE BARB CONNECTION
- CAP
- PARTICULATE FILTER
- COALESCING FILTER
- PETES PLUS
- MOTOR
- VARIABLE FREQUENCY DRIVE
- SUBMERSIBLE WELL PUMP
- PROGRESSIVE CAVITY PUMP
- ROTARY-LOBE BLOWER
- REGENERATIVE BLOWER
- CHEMICAL METERING PUMP
- SUMP PUMP
- MAGNETIC FLOW METER
- POSITIVE DISPLACEMENT FLOW METER
- AVERAGING PILOT TUBE FLOW METER
- ROTAMETER WITH VALVE
- STATIC MIXER
- SITE GLASS
- FILTER
- FLAME ARRESTOR
- VARIABLE AREA FLOW METER

INSTRUMENT SYMBOLS

	PRIMARY CONTROL PANEL NORMALLY ACCESSIBLE TO OPERATOR	FIELD MOUNTED	AUXILIARY PANEL OR RACK NORMALLY ACCESSIBLE TO OPERATOR
DISCRETE INSTRUMENTS			
SHARED DISPLAY, SHARED CONTROL			
COMPUTER FUNCTION INCLUDING DISTRIB. CNTL. SYS.			
PROGRAMMABLE LOGIC CONTROLLER FUNCTION			

PIPELINE DESIGNATION

6"-S04P

- LINE TYPE
- MATERIAL
- SIZE

TYPE:

D = DUCT
H = HOSE
C = DOUBLE WALL CONTAINMENT PIPE
P = PIPE
T = TUBE

MATERIAL:

BRZ - BRASS/BRONZE
CIR - CAST IRON
CST - CARBON STEEL
CPR - COPPER
CVC - CHLORINATED POLYVINYL CHLORIDE
DIR - DUCTILE IRON
FRP - FIBERGLASS
GCS - GALVANIZED CARBON STEEL
HDPE - HIGH DENSITY POLYETHYLENE
LCS - LINED CARBON STEEL
PET - POLYETHYLENE
POP - POLYPROPYLENE
PVC - POLYVINYL CHLORIDE
RUB - RUBBER
S04 - 304 STAINLESS STEEL
S4L - 304L STAINLESS STEEL
S16 - 316 STAINLESS STEEL
S6L - 316L STAINLESS STEEL
TEF - TEFLON
VIT - VITON
TYG - TYGON

ALARMS:

1. AN ALARM THAT DISABLES ALL OR ANY PART OF THE SYSTEM WILL SEND A NOTIFICATION TO THE OPERATOR VIA THE SCADA SYSTEM.

INTERLOCK SCHEDULE

1	SYSTEM SHUTDOWN	3	STOP PUMP P-101
2	START PUMP P-101	4	SYSTEM NOTIFICATION

INSTRUMENT IDENTIFICATION LETTERS

FIRST LETTER		SUCCEEDING LETTERS		
MEASURE OR INITIATING VARIABLE	MODIFIER	READOUT OR PASSIVE FUNCTION	OUTPUT FUNCTION	MODIFIER
A = ANALYSIS		ALARM		
B = BURNER, COMBUSTION		USER'S CHOICE	USER'S CHOICE	USER'S CHOICE
C = USER'S CHOICE			CONTROL, CLOSED	
D = USER'S CHOICE	DIFFERENTIAL			
E = VOLTAGE, EMERGENCY		SENSOR (PRIMARY ELEMENT)	STOP	
F = FLOW RATE	RATIO (FRACTION)			
G = USER'S CHOICE		GLASS, VIEWING DEVICE		
H = HAND				HIGH
I = CURRENT (ELECTRICAL)		INDICATE		
J = POWER	SCAN			
K = TIME, TIME SCHEDULE	TIME RATE OF CHANGE		CONTROL STATION	
L = LEVEL		LIGHT		LOW
M = USER'S CHOICE	MOMENTARY			MIDDLE,INTERMEDIATE
N = USER'S CHOICE		USER'S CHOICE	USER'S CHOICE	USER'S CHOICE
O = USER'S CHOICE		ORIFICE, RESTRICTION	OPEN	
P = PRESSURE, VACUUM		POINT (TEST) CONNECTION		
Q = QUANTITY	INTEGRATE, TOTALIZE			
R = RADIATION		RECORD	RUN	
S = SPEED, FREQUENCY	SAFETY	SWITCH	STOP	
T = TEMPERATURE			TRANSMIT	
U = MULTIVARIABLE		MULTIFUNCTION	MULTIFUNCTION	MULTIFUNCTION
V = VIBRATION, MECH. ANALYSIS			VALVE, DAMPER, LOUVER	
W = WEIGHT, FORCE		WELL		
X = UNCLASSIFIED	X AXIS	UNCLASSIFIED	UNCLASSIFIED	UNCLASSIFIED
Y = EVENT, STATUS OR PRESENCE	Y AXIS		RELAY,COMPUTE,CONVERT	
Z = POSITION, DIMENSION	Z AXIS	UNCLASSIFIED	DRIVE, ACTUATOR, FINAL CONTROL ELEMENT	

ABBREVIATIONS:

AC AIR COMPRESSOR
AD AIR DRYER
AI pH INDICATOR
AIT pH INDICATOR TRANSMITTER
AR AIR RECEIVER TANK
AS ANTI-SCALANT
C CENTER LINE
CAH CONDUCTIVITY ALARM HIGH
CFM CUBIC FEET PER MINUTE
CI CONDUCTIVITY INDICATOR
CIP CLEAN IN PLACE
CIT CONDUCTIVITY INDICATOR TRANSMITTER
CO CLEAN OUT
CTE CONDUCTIVITY TEMPERATURE ELEMENT
CY CUBIC YARDS
°C DEGREES CELSIUS
DPAL DIFFERENTIAL PRESSURE ALARM LOW
DPAH DIFFERENTIAL PRESSURE ALARM HIGH
DPIT DIFFERENTIAL PRESSURE INDICATOR TRANSMITTER
DPI DIFFERENTIAL PRESSURE INDICATOR
E ELECTRIC ACTUATOR
ECIP ELECTRODE CLEAN IN PLACE
EM ENVIRONMENTAL MEDIA
ELEV ELEVATION
ESS EMEGENCY STOP SWITCH
F FILTER
FE FLOW ELEMENT
FI FLOW INDICATOR
FIT FLOW INDICATING TRANSMITTER
FMO FLOW MONITOR
FQ FLOW TOTALIZER
FT FOOT/ FEET
FT FLOW TRANSMITTER
FV FLOW VALVE
GAC GRANULATED ACTIVATED CARBON
GAL GALLONS
GPD GALLONS PER DAY
HAZ HAZARDOUS
HDPE HIGH DENSITY POLYETHYLENE
HOA HAND/ OFF/ AUTO
HR HOUR
HS HAND SWITCH
IN. INCHES
kg KILOGRAMS
KV TIMER VALVE
L LITER
LAH LEVEL ALARM HIGH
LAHH LEVEL ALARM HIGH HIGH
LAL LEVEL ALARM LOW
LE LEVEL ELEMENT
LP LIQUID PHASE
LS LEVEL SWITCH
LT LEVEL TRANSMITTER
M MOTOR
MAX MAXIMUM
uM MICROMETER
mg MILLIMETER
MIN MINIMUM
MMF MULTIMEDIA FILTER
NA NOT APPLICABLE
NC NORMALLY CLOSED
NO NORMALLY OPEN
NPT NATIONAL PIPE THREAD
% PERCENT
LB POUNDS
PAH PRESSURE ALARM HIGH
PAL PRESSURE ALARM LOW
PI PRESSURE INDICATOR
PIT PRESSURE INDICATOR TRANSMITTER
PSIG PRESSURE PER SQUARE FOOT GAUGE
PR PRESSURE RELIEF VALVE
PRV PRESSURE REGULATING VALVE
PSV PRESSURE SAFETY VALVE
PVR PRESSURE VACUUM RELIEF
QAPP QUALITY ASSURANCE PROJECTION PLAN
NaOH SODIUM HYDROXIDE
SP SAMPLE PORT
T TANK
TAH TEMPERATURE ALARM HIGH
TAHH TEMPERATURE ALARM HIGH HIGH
TI TEMPERATURE INDICATOR
TIT TEMPERATURE INDICATOR TRANSMITTER
TYP TYPICAL
TWV THREE WAY VALVE
V VALVE
VAH VACUUM ALARM HIGH
VAL VACUUM ALARM LOW
VE VACUUM ELEMENT
VIT VACUUM INDICATING TRANSMITTER
XLPE CROSS LINKED POLYETHYLENE
YI STATUS INDICATOR
ZX POSITION INDICATOR

NOTES:

1. ANY FIRST LETTER COMBINED WITH A MODIFIER REPRESENTS A NEW AND SEPARATE MEASURED VARIABLE. EXAMPLES: DP= DIFFERENTIAL PRESSURE; FQ= TOTALIZED OR INTEGRATED FLOW. EXCEPTION IS THE MODIFIER "J" FOR MULTIPOINT SCANNING.
2. FOR ANALYSIS NOT IDENTIFIED BY A SPECIFIC LETTER INTHE TABLE, USE FIRST LETTER "A" NEAR THE INSTRUMENT SYMBOL, SPECIFY THAT NATURE OF THE ANALYSIS. EXAMPLE: pH
3. MEANING OF A "USER'S CHOICE" LETTER SHALL BE CONSISTENT THROUGHOUT A PROJECT, AND SHALL BE SPECIFIED IN THE DRAWING LEGEND.

GENERAL NOTES:

1. ALL ANALOG SET POINTS SHALL BE FIELD ADJUSTED BY OPERATOR AT HMI INTERFACE.
2. ALARMS THAT SHUT DOWN TREATMENT EQUIPMENT MUST BE CLEARED BY OPERATOR BEFORE BEING RESTARTED.
3. THIS DRAWING IS PROVIDED FOR INFORMATIONAL PURPOSES ONLY.

© FLITEWAY TECHNOLOGIES, INC.

NOT FOR CONSTRUCTION

REV.	ISSUED DATE	DESCRIPTION	BY	CK'D
2	07/29/2020	ISSUED FOR CUSTOMER REVIEW_R2	PAP	MPS
1	07/07/2020	ISSUED FOR CUSTOMER REVIEW_R1	PAP	MPS
0	06/26/2020	ISSUED FOR CUSTOMER REVIEW	PAP	MPS

SEAL

Prepared for:
ERM
Environmental Resources Management (ERM)
700 West Virginia St. #601
Milwaukee, WI 53204
Tel: (414) 289-9505 Fax: (414) 289-9552
www.erm.com

Prepared by:
Fliteway Technologies, Inc.
2129 East Birchwood Ave. Cudahy, WI 53110
(414) 483-5600 • 1-800-236-3489 • FAX (414) 483-1957
Fliteway Technologies, Inc.
2129 East Birchwood Ave.
Cudahy, WI 53110
Tel: (414) 483-5600 Fax: (414) 483-1957
www.fliteway.com

SOIL VAPOR EXTRACTION
(SVE) SYSTEM
910 MAYER ST
MADISON, WI

SHEET TITLE
P&ID NOTES & LEGEND SHEET

APPROVED BY MPS	CHECKED BY MPS
DESIGNED BY JF	DRAWN BY PAP
PROJECT NUMBER Q15061	DRAWING NUMBER P-01
	SHEET 1 OF 2

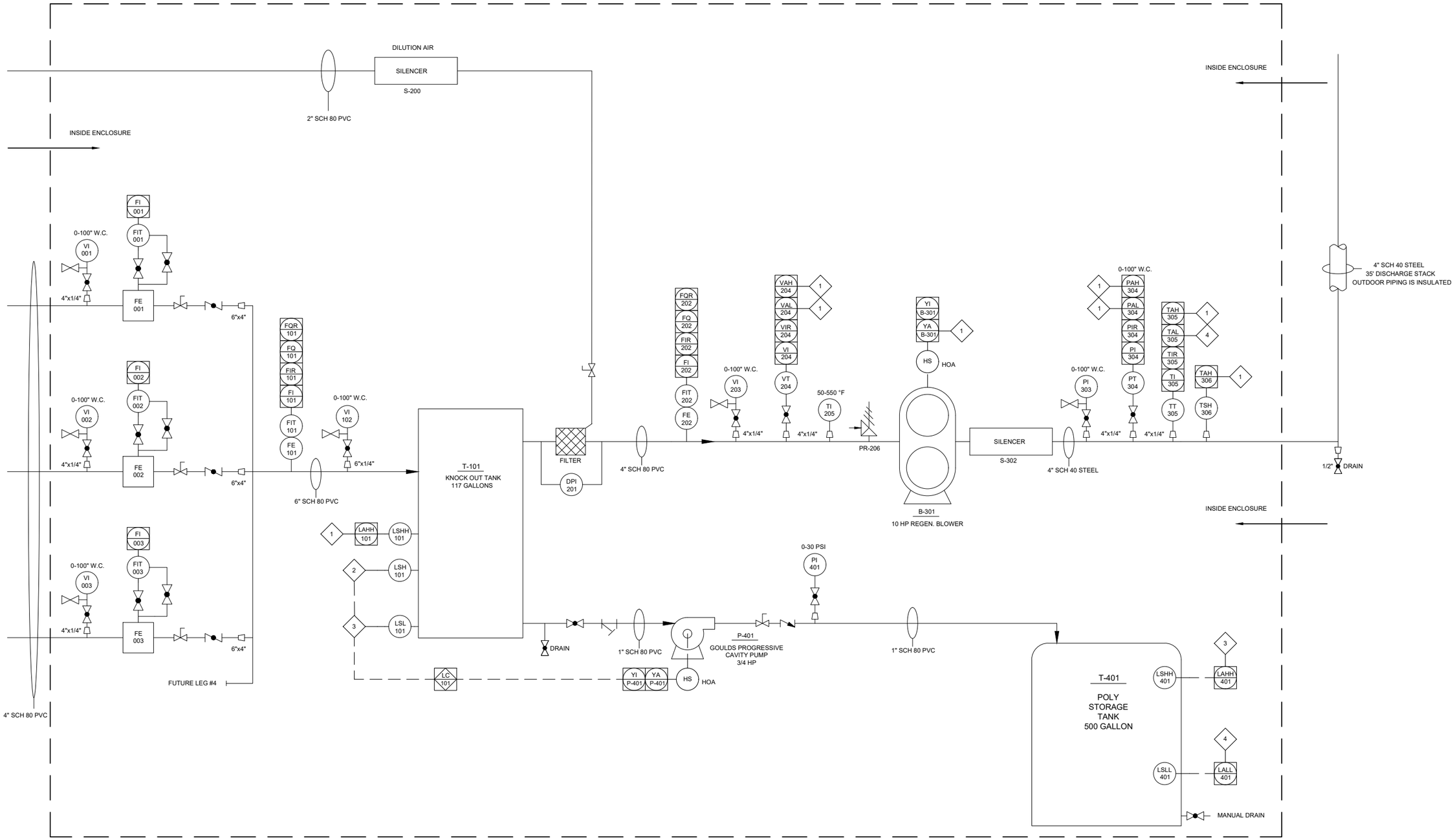

© FLITEWAY TECHNOLOGIES, INC.

NOT FOR CONSTRUCTION

REV.	ISSUED DATE	DESCRIPTION	BY	CK'D
2	07/29/2020	ISSUED FOR CUSTOMER REVIEW_R2	PAP	MPS
1	07/07/2020	ISSUED FOR CUSTOMER REVIEW_R1	PAP	MPS
0	06/26/2020	ISSUED FOR CUSTOMER REVIEW	PAP	MPS

SEAL

Prepared for:

ERM
Environmental Resources Management (ERM)
700 West Virginia St. #601
Milwaukee, WI 53204
Tel: (414) 289-9505 Fax: (414) 289-9552
www.erm.com

Prepared by:

Fliteway Technologies, Inc.
Fliteway Technologies, Inc.
2129 East Birchwood Ave.
Cudahy, WI 53110
Tel: (414) 483-5600 Fax: (414) 483-1957
www.fliteway.com

SOIL VAPOR EXTRACTION
(SVE) SYSTEM
910 MAYER ST
MADISON, WI

SHEET TITLE
SVE PIPING & INSTRUMENTATION DIAGRAM

APPROVED BY MPS	CHECKED BY MPS
DESIGNED BY JF	DRAWN BY PAP
PROJECT NUMBER Q15061	DRAWING NUMBER P-02
	SHEET 2 OF 2

Fliteway Technologies, Inc.
2129 East Birchwood Ave.• Cudahy, WI 53110
(414) 483-5600 • 1-800-236-3580 • FAX (414) 483-1957

910 MAYER
SOIL VAPOR EXTRACTION SYSTEM
ELECTRICAL DESIGN DRAWINGS

FORMER OSCAR MAYER HQ
910 MAYER AVE
MADISON, WI 53704

PREPARED BY:

MAIN OFFICE
PRESIDIO SYSTEMS, INC.
159 Wright Brothers Ave.
Livermore, CA 94551
Tel: (925) 456-8400 Fax: (925) 456-8404
www.presidiosystems.com

LOCAL OFFICE
FLITEWAY TECHNOLOGIES, INC.
2129 E. Birchwood Ave
Cudahy, WI 53110
Tel: (414) 483-5600 Fax: (414) 483-1957
www.fliteway.com

PREPARED FOR:

ENVIRONMENTAL RESOURCE MANAGEMENT (ERM)
700 West Virginia St. #601
Milwaukee, WI 53204
Tel: (414) 289-9505 Fax: (414) 289-9552
www.erm.com

TABLE OF CONTENTS

E-01: ELECTRICAL DRAWINGS TITLE SHEET
E-02: NOTES & LEGEND
E-03: ELECTRICAL SINGLE LINE

© FLITEWAY TECHNOLOGIES, INC.

ISSUED FOR AGENCY REVIEW

REV.	ISSUED DATE	DESCRIPTION	BY	CK'D
1	07/29/2020	ISSUED FOR AGENCY REVIEW	DF	AMC
0	06/01/2020	ISSUED FOR CUSTOMER REVIEW	BDC	JK

SEAL

Prepared for:
ERM
Environmental Resources Management (ERM)
700 West Virginia St. #601
Milwaukee, WI 53204
Tel: (414) 289-9505 Fax: (414) 289-9552
www.erm.com

Prepared by:
Fliteway Technologies, Inc.
2129 East Birchwood Ave.
Cudahy, WI 53110
Tel: (414) 483-5600 Fax: (414) 483-1957
www.fliteway.com

SOIL VAPOR EXTRACTION SYSTEM
910 MAYER
MADISON, WI

SHEET TITLE
ELECTRICAL TITLE SHEET

APPROVED BY JK	CHECKED BY JK
DESIGNED BY BDC	DRAWN BY BDC
PROJECT NUMBER 15061	DRAWING NUMBER E-01
	SHEET 1 OF 3

HTX: Y:\ClntM-P\910 Mayer LLC\0441161\Task 2 - Former Spice Room\0441161-05_Electrical.dwg, 7/29/2020

ABBREVIATIONS

A	AMPERE
AC	ALTERNATING CURRENT
AL	ALUMINUM
AI	ANALOG IN
AIT	CHLORINE RESIDUAL ANALYZER
AM	AMMETER
ANN	ANNUNCIATOR
AMP	AMPERES, AMPERAGE
AO	ANALOG OUT
APC	AMERICAN POWER CORP.
APPD	APPROVED
AS	AMMETER SWITCH
AT	AMPERE TRIP
ATS	AUTOMATIC TRANSFER SWITCH
AUTO	AUTOMATIC
AUX	AUXILIARY
AWG	AMERICAN WIRE GAUGE
BATT	BATTERY
BKR	BREAKER
BLDG	BUILDING
C	CONDUIT
CAB	CABINET
CB	CIRCUIT BREAKER
CKT	CIRCUIT
CL	CIRCUIT
CO	CONDUIT ONLY
COM	COMMON
COND	CONDUIT
CP	CONTROL PANEL
CPT	CONTROL POWER TRANSFORMER
CR	CONTROL RELAY
CT	CURRENT TRANSFORMER
CU	COPPER
DC	DIRECT CURRENT
DH	DATA HIGHWAY
DI	DIGITAL IN
DIO	DIGITAL IN OUTPUT
DISC	DISCONNECT
DISTR	DISTRIBUTION
DPDT	DOUBLE POLE DOUBLE THROW
DWG	DRAWING
(E)	EXISTING
EF	EXHAUST FAN
EHU	ELECTRIC HEATING UNIT
ELEV	ELEVATION
FDR	FEEDER
EMT	ELECTRICAL METALLIC TUBING
ENCL	ENCLOSURE
FUT	FUTURE
FVR	FULL VOLTAGE REVERSING
EP	EXPLOSION PROOF
ETM	ELAPSED TIME METER
EXH	EXHAUST
EXIST	EXISTING
FLEX	FLEXIBLE
FLUOR	FLUORESCENT
FVNR	FULL VOLTAGE NON-REVERSING
FWD	FORWARD
GALV	GALVANIZED
GEN	GENERATOR
GND	GROUND
H	HOT CONDUCTOR
HH	HAND HOLE
HID	HIGH INTENSITY DISCHARGE
HG	MERCURY
HMI	HUMAN MACHINE INTERFACE
HOA	HAND-OFF-AUTOMATIC
HP	HORSEPOWER
HPS	HIGH PRESSURE SODIUM
HT TR	HEAT TRACED
HTR	HEATER
HVAC	HEATING, VENTILATING, A/C
HZ	HERTZ - CYCLES PER SECOND
IMC	INTERMEDIATE METAL CONDUIT
INCAND	INCANDESCENT
IND	INDICATION, INDICATING
I/O	INPUT/OUTPUT
INSTR	INSTRUMENT
INVT	INVERT
JB	JUNCTION BOX
J BOX	JUNCTION BOX
KVA	KILO VOLT AMPERES
KW	KILOWATTS
KWH	KILOWATT HOUR
KCM	1,000 CIRCULAR MILS
L	LINE
LC	LIGHTING CONTACTOR
LCB	LOCAL CONTROL BOARD
LCP	LOCAL CONTROL PANEL
LOC	LOCAL
LS	LEVEL SWITCH
LT	LIGHT
LTG	LIGHTING
LTS	LIGHTS
M	MOTOR CONTACTOR COIL
mA	MILLIAMPS
MAN	MANUAL
MAG	MAGNETIC
MAX	MAXIMUM
MCC	MOTOR CONTROL CENTER
MCB	MAIN CONTROL BOARD
MCP	MOTOR CIRCUIT PROTECTOR
MD	MOTORIZED DAMPER
MDR	**MANUFACTURERS DESIGNATION FOR SPECIFIC POWER SUPPLY**
MH	MANHOLE
MTG	MOUNTING
MIN	MINIMUM, MINUTES
MLO	MAIN LUGS ONLY
MOV	MOTOR OPERATED VALVE
MS	MOTOR STARTER
MMS	MANUAL MOTOR STARTER
MTD	MOUNTED
MTR	MOTOR
MTS	MANUAL TRANSFER SWITCH
N	NEUTRAL
NA	NON-AUTOMATIC
NC	NORMALLY CLOSED
NO	NORMALLY OPEN
NO	NUMBER
NOS	NUMBERS
NP	NAMEPLATE
(N)	NEW OR PROPOSED
NTS	NOT TO SCALE
OC	ON CENTER
CC	CENTER TO CENTER
OL	OVERLOAD RELAY
OSC	OSCILLATION
P	POLE
PB	PUSH BUTTON
PF	POWER FACTOR
PH, Ø	PHASE
PI	PULSE IN
PL	PILOT LIGHT
PLC	PROGRAMMABLE LOGIC CONTROLLER
PNL	PANEL
PNLBD	PANELBOARD
POS	POSITION
POT	POTENTIOMETER
PRI	PRIMARY
P/S	POWER SUPPLY
PS	PRESSURE SWITCH
PT	POTENTIAL TRANSFORMER
PVC	POLYVINYL CHLORIDE
REC	RECEPTACLE
RECPTS	RECEPTACLES
REQ'D	REQUIRED
REV	REVERSE
RGS	RIGID GALVANIZED STEEL
RTU	REMOTE TERMINAL UNIT
RVNR	REDUCED VOLTAGE NON-REVERSING
RVSS	REDUCED VOLTAGE SOLID STATE
SC	SHORT CIRCUIT CURRENT
SCH	SCHEDULE
SEC	SECONDARY, SECONDS
SECT	SECTION
SS	SELECTOR SWITCH
SHLD	SHIELDED
SP	SPARE
SPDT	SINGLE POLE DOUBLE THROW
SPECS	SPECIFICATIONS
SP HTR	SPACE HEATER
SPST	SINGLE POLE SINGLE THROW
SS	SOLID STATE
ST	SHUNT TRIP
STA	STATION
STD	STANDARD
STL	STEEL
SOV	SOLENOID OPERATED VALVE
SW	SWITCH
SYS	SYSTEM
SYM	SYMMETRICAL
TB	TERMINAL BOX
TC	TIME CLOCK
TACH	TACHOMETER
TEMP	TEMPERATURE
TERM	TERMINAL
T'STAT	THERMOSTAT
TD	TIME DELAY
TS	TEMPERATURE SWITCH
TSP	TWISTED SHIELDED PAIR
TVSS	TRANSIENT VOLTAGE SURGE SUPPRESSOR
TYP	TYPICAL
UG	UNDERGROUND
UH	UNIT HEATER
UON	UNLESS OTHERWISE NOTED
UPS	UNINTERRUPTIBLE POWER SUPPLY
V	VOLTAGE, VOLTS
VFD	VARIABLE FREQUENCY DRIVE
VP	VAPOR PROOF
VS	VOLTMETER SWITCH, VARIABLE SPEED
W	WATTS, WIRE
WHD	WATTHOUR DEMAND METER
WHM	WATTHOUR METER
WP	WEATHERPROOF

DRAWING LEGEND

	EXISTING EQUIPMENT, WIRING, DEVICES
	NEW WORK
	DEMOLISH OR REMOVE
	CONDUIT TURNING UP
	CONDUIT TURNING DOWN
X	EQUIPMENT OR DEVICE TAG
X	SHEET NOTE TAG
X	HVAC/LIGHTING ITEM (SEE SCHEDULE)
	DUPLEX RECEPTACLE, 20A, 125V, NEMA 5-20R
	DOUBLE DUPLEX RECEPTACLE, 20A, 125V, NEMA 5-20R
	FLUORESCENT LIGHTING FIXTURE
J	JUNCTION BOX, SIZE PER NEC
	WALL MOUNTED LUMINAIRE
$	LIGHT SWITCH. SINGLE ACTION.
	3/4" x 10' CU CLAD GROUND ROD.
	UNDERGROUND CONDUIT OR DUCTBANK.
	INSTRUMENTATION DEVICE
T	THERMOSTAT
XP	CONDUIT SEAL OFF
	SHORT HASH MARK INDICATES HOT WIRE INDICATES GROUND CONDUCTOR LONG HASH MARK INDICATES NEUTRAL WIRE

NOTE: NO HASH MARK INDICATES 3/4"C. 2#12+1#12G

ELECTRICAL COMPONENTS

	EARTH GROUND
	CHASSIS GROUND
	GROUNDED RECEPTACLE
	FUSE
	HORN
	TRANSFORMER
	SOLENOID
	OVERLOAD RELAY
	CIRCUIT BREAKER
10	MOTOR (NO. DENOTES HORSEPOWER), SINGLE LINE
	MOTOR, ELECTRICAL LAYOUT SHEET(S)
	RELAY CONTACT, N.O.
	RELAY CONTACT, N.C.
	SHIELDED CABLE
	DIODE, SURGE SUPPRESSOR
	SURGE SUPPRESSOR
XX	TERMINAL BLOCK
	SEPARABLE CONNECTOR
	POTENTIOMETER
	CURRENT TRANSFORMER

NOTES - RACEWAYS

1. CONDUIT ROUTING SHOWN ON DRAWINGS IS DIAGRAMMATIC TO ILLUSTRATE DESIGN INTENT. CONTRACTOR SHALL FIELD DETERMINE THE MOST SUITABLE ROUTING TO FACILITATE INSTALLATION.
2. ALL CONDUIT RUNS SHALL BE INSTALLED WITH A MINIMUM NUMBER OF BENDS AND OFFSETS. GENERALLY, A RUN OF CONDUIT CONTAINING LOW VOLTAGE (600 VOLT MAXIMUM) WIRE SHALL HAVE A MAXIMUM PULLING DISTANCE OF 300 FEET AND CONTAIN NO MORE THAN THREE AND ONE-HALF QUARTER BENDS (315 DEGREES TOTAL), INCLUDING OFFSETS AND BENDS LOCATED IMMEDIATELY ADJACENT TO THE PULL LOCATION. ON RUNS OVER 300 FEET THIS SHALL BE REDUCED TO TWO QUARTER BENDS (180 DEGREES TOTAL).
3. FOR 600 VOLT CABLES, THE MINIMUM RADIUS OF CONDUIT BENDS SHALL BE SIX TIMES THE DIAMETER OF THE CONDUIT. WHERE BENDS OR OFFSETS ARE REQUIRED, THEY SHALL BE MADE WITH SUITABLE CONDUIT BENDING EQUIPMENT. A UNIFORM CIRCULAR CROSS SECTION OF THE CONDUIT SHALL BE MAINTAINED AT BENDS. NO SINGLE BEND SHALL BE GREATER THAN 90 DEGREES.
4. CONDUIT UNIONS SHALL BE INSTALLED AT REMOVABLE DEVICES SUCH THAT THE DEVICES CAN BE EASILY AND INDEPENDENTLY REMOVED.
5. NOT ALL FITTINGS REQUIRED FOR A COMPLETE CONDUIT SYSTEM ARE SHOWN ON THE DRAWINGS. IT SHALL BE THE CONTRACTOR'S RESPONSIBILITY TO INSTALL THE NUMBER AND TYPE OF FITTINGS REQUIRED FOR A COMPLETE CONDUIT SYSTEM WHICH COMPLIES WITH ALL APPLICABLE CODES AND STANDARDS. THE THREADS OF FITTINGS, INCLUDING COVER SCREWS AND BOLTS, SHALL BE COATED WITH A CONDUCTIVE THREAD LUBRICANT PRIOR TO INSTALLATION TO PROTECT AGAINST CORROSION.
6. ALL CONDUIT FITTINGS AND JUNCTION BOXES SHALL BE INSTALLED SO THAT THEIR COVERS ARE EASILY REMOVED.
7. ALL METALLIC CONDUIT SHALL BE TERMINATED WITH INSULATED BUSHINGS TO PREVENT DAMAGE TO WIRE DURING PULLING OPERATIONS, EXCEPT IN ENCLOSURES WHERE HUB DESIGN IS ADEQUATE TO PREVENT INSULATION DAMAGE. GROUNDING CONNECTIONS SHALL BE PROVIDED ON ALL INSTALLED BUSHINGS FOR GROUND CONTINUITY.
8. CONDUITS SHALL NOT BE SUPPORTED FROM EQUIPMENT OR PIPING. CONDUITS SHALL BE SUPPORTED AT INTERVAL AS REQUIRED BY NEC 344.30, "SECURING AND SUPPORTS" AND TABLE 344.30(B)(2), TO PREVENT NOTICEABLE SAG. NO NOTICEABLE SAG SHALL BE ALLOWED. THE CONTRACTOR SHALL PROVIDE ANY ADDITIONAL SUPPORT REQUIRED TO PREVENT OBJECTIONABLE SAG. IF RIGID ALUMINUM CONDUIT IS USED, THE SUPPORT SYSTEM SHALL BE OF SUITABLE MATERIAL OR CONSTRUCTION TO PREVENT GALVANIC ACTION.
9. LIQUID-TITE FLEXIBLE CONDUIT WITH PVC JACKET SHALL BE USED WHERE VIBRATION IS PRESENT, WHERE FLEXIBILITY IS REQUIRED, AND AT ALL MOTOR CONDUIT BOXES. TERMINATIONS OF FLEXIBLE METALLIC CONDUIT SHALL BE MADE USING LIQUID-TIGHT CONNECTORS WITH INTEGRAL INSULATED BUSHINGS AND POSITIVE GROUND CONNECTIONS. THE MAXIMUM LENGTH OF FLEXIBLE CONDUIT SHALL BE 24 INCHES FOR INSTRUMENTS AND EQUIPMENT, 36 INCHES FOR MOTORS, AND 48 INCHES FOR LIGHTING.
10. RUNS OF ABOVE GROUND CONDUIT FOR ANY SERVICE SHALL NOT BE DIRECTLY SUPPORTED FROM OVERHEAD PIPING.
11. ALL ABOVE GROUND, STRAIGHT CONDUIT RUNS OVER 200 FEET LONG SHALL HAVE EXPANSION FITTINGS, WITH PROVISION FOR 4 INCHES TOTAL EXPANSION. BONDING JUMPERS SHALL BE INSTALLED TO ASSURE GROUNDING CONTINUITY.
12. THREADED JOINTS FOR CONDUITS SHALL BE MADE UP WITH A METAL OXIDE PAINT SUCH AS "T&B" KOPR-SHIELD, BURNDY PENETROX E OR APPROVED EQUAL.
13. PROVIDE ABOVE GRADE CONDUIT SUPPORT AT LEAST EVERY 10 FEET. FASTEN CONDUIT WITHIN 3 FEET OF EACH OUTLET BOX OR FITTING.
14. USE CABLE PULLING LUBRICANT, SUCH AS, POLYWATER OR EQUAL FOR CABLE PULLS IN CONDUIT GREATER THAN 10-FEET.

GENERAL ELECTRICAL CONSTRUCTION NOTES

1. CONTRACTOR IS RESPONSIBLE FOR VERIFY EXISTING CONDITIONS AND ROUTE CONDUITS WITHOUT DISTURBING EXISTING UTILITIES. IN ADDITION, CONDUIT ROUTING MUST BE APPROVED BY A OWNERS REPRESENTATIVE. FEASIBILITY OF THE LOCATION OF THE EQUIPMENT SHALL BE FIELD VERIFIED. COORDINATE WITH ALL TRADES.
2. VERIFY, LOCATE AND PRESERVE ALL UNDERGROUND UTILITIES. REPAIR ALL UTILITIES DAMAGED DURING CONSTRUCTION TO OWNER'S SATISFACTION.
3. MINOR CHANGES IN WORK DUE TO EXISTING CONDITIONS SHALL BE MADE WITHOUT ADDITIONAL COST TO THE OWNER.
4. ELECTRICAL CONTRACTOR SHALL VISIT JOB SITE AND VERIFY EXISTING CONDITIONS BEFORE BIDDING AND SHALL INCLUDE IN HIS BID THE NECESSARY COSTS TO CONSTRUCT THIS PROJECT IN ACCORDANCE WITH THE INTENT OF THE ELECTRICAL DRAWINGS, SPECIFICATIONS, AND ALL APPLICABLE CODES.
5. THE ELECTRICAL INSTALLATION SHALL COMPLY WITH ALL LOCAL, STATE, AND NATIONAL CODES, LAWS, AND ORDINANCES APPLICABLE TO ELECTRICAL WORK.
6. ALL ELECTRICAL MATERIALS AND EQUIPMENT SHALL BE LISTED BY UNDERWRITERS LABORATORIES.
7. THE WORD PROVIDE AS USED ON THE DRAWINGS SHALL BE DEFINED AS CONTRACTOR FURNISHED AND INSTALLED.
8. AT LEAST TWO WORKING DAYS PRIOR TO ANY EXCAVATION WORK, THE CONTRACTOR SHALL CALL UNDERGROUND SERVICE ALERT AT 1-800-227-2600 FOR LOCATING AND MARKING UTILITIES IN THE AREAS OF THE WORK.
9. ALL UNDERGROUND CONDUITS SHALL BE PVC, SCHEDULE 40 OR BETTER UNLESS OTHERWISE NOTED.
10. ALL CONDUIT CONNECTIONS TO SHEET METAL ENCLOSURES SHALL UTILIZE MYERS-TYPE HUBS. NO "COUPLE-LOCKNUTTED" CONDUIT CONNECTIONS SHALL BE PERMITTED.

NOTES - WIRING

1. SINGLE OR MULTICONDUCTOR CABLE MAY BE USED FOR CONTROL, INSTRUMENT, COMMUNICATION AND SIGNAL CIRCUITS. SINGLE-CONDUCTOR SHALL #14 AWG MINIMUM; SINGLE PAIRED CABLES SHALL BE #18 AWG MINIMUM; AND MULTICONDUCTOR CABLE SHALL BE #20 AWG MINIMUM. CIRCUITS CLASSIFIED AS CLASS I CIRCUITS BY NEC ARTICLE 725 SHALL BE #18 AWG MINIMUM, 600 VOLT INSULATION CLASS.
2. ALL FIELD POWER, CONTROL AND LIGHTING CONDUCTORS SHALL BE COLOR CODED AS FOLLOWS UNLESS OTHERWISE SPECIFIED.
   - BLACK - ALL UNGROUNDED CONTROL CIRCUIT CONDUCTORS OPERATING AT THE SUPPLY VOLTAGE.
   - RED - UNGROUNDED AC CONTROL CIRCUITS OPERATING AT A VOLTAGE LESS THAN THE SUPPLY VOLTAGE.
   - BLUE - UNGROUNDED DC CONTROL CIRCUITS.
   - YELLOW OR ORANGE - UNGROUNDED CONTROL CIRCUITS OR OTHER WIRING.
   - WHITE - GROUNDED AC CURRENT-CARRYING CONTROL CIRCUIT CONDUCTOR REGARDLESS OF VOLTAGE.
   - GREY - GROUNDED DC CURRENT-CARRYING CONTROL CIRCUIT CONDUCTOR.

   ALL INTERIOR CONTROL PANEL WIRING SHALL BE PER UL 508A, LATEST EDITION.
3. NO MORE THAN TWO CONDUCTORS SHALL BE CONNECTED TO ANY ONE TERMINAL ON A TERMINAL STRIP. IF MORE THAN TWO CONDUCTORS MUST BE TERMINATED AT THE SAME POINT, THE TERMINATIONS SHALL BE MADE ON AS MANY TERMINALS AS NECESSARY AND THE TERMINALS INTERCONNECTED WITH JUMPERS. THE JUMPERS SHALL BE PHYSICALLY SEPARATED FROM THE CONDUCTORS.
4. FOR POWER AND LIGHTING CIRCUITS, 600 VOLTS AND BELOW, THE SMALLEST WIRE SHALL BE #12 AWG. EXCEPT THAT #14 AWG SHALL BE USED FOR CONTROLS. WIRES SHALL BE SINGLE CONDUCTOR, COPPER, STRANDED, 600 VOLT HEAT AND MOISTURE RESISTANT THERMOPLASTIC INSULATED TYPE "THHN/THWN". UNDERGROUND CONDUCTORS MUST BE RHW, UNLESS OTHERWISE NOTED.
5. #10 AWG OR LARGER SHALL BE XHHW UNLESS NOTED OTHERWISE.
6. MOTOR JUNCTION BOX CONNECTIONS SHALL BE CRIMP LUG/BOLTED CONNECTIONS WITH 3M MOTOR SPICE KIT 5300 SERIES INSULATORS.

NOTES - GROUNDING

1. ALL INSULATED GROUNDING CONDUCTORS SHALL BE MADE OF SOFT DRAWN, STRANDED COPPER WIRE, UTILIZING GREEN, FIRE RETARDANT INSULATION. ALL EXPOSED GROUNDING CONDUCTORS SHALL BE MINIMUM #6 AWG, RIGIDLY SUPPORTED, AND PROTECTED FROM MECHANICAL INJURY.
2. ALL UN-INSULATED GROUNDING CONDUCTORS (STRANDED OR SOLID) SHALL BE TINNED COPPER.
3. ALL CONNECTIONS SHALL BE COATED WITH A CONDUCTIVE, CORROSION PREVENTIVE COMPOUND BEFORE JOINING.
4. ALL COPPER BUS BARS MUST BE CLEANED PRIOR TO MAKING CONNECTIONS TO REMOVE SURFACE OXIDATION.
5. CONTRACTOR SHALL TEST GROUNDING ELECTRODE SYSTEM USING THE FALL OF POTENTIAL METHOD OR A CLAMP-ON GROUND RESISTANCE TESTER. RESULTS SHALL SHOW THE ELECTRODE HAS A RESISTANCE TO EARTH OF 25 OHMS OR LESS. SUPPLEMENTAL ELECTRODES SHALL BE REQUIRED IF RESISTANCE TO EARTH IS GREATER THAN 25 OHMS.

NOTES - LABELS

1. PROVIDE LAMINATED PLASTIC EQUIPMENT NAMEPLATE LABELS AT ALL FIELD DEVICES, DENOTING EQUIPMENT NAME, VOLTAGE AND FEEDER ORIGIN. PLASTIC NAMEPLATES SHALL BE BLACK WITH WHITE LETTERS. ALL EXISTING PANELBOARD CIRCUIT DIRECTORIES SHALL BE UPDATED DENOTING NEW EQUIPMENT LOADS.
2. ALL JUNCTION BOX COVERPLATES SHALL BE LABELED WITH CIRCUIT NUMBERS IT CONTAINS.
3. NAMEPLATES AND TAGS SHALL BE PROVIDED FOR ELECTRICAL EQUIPMENT AND DEVICES, INCLUDING ALL PUSHBUTTONS, SELECTOR SWITCHES, CIRCUIT BREAKERS AND STARTERS. WHERE EQUIPMENT ALSO CAN BE STARTED FROM ANOTHER LOCATION, OR STARTED AUTOMATICALLY, A CAUTION NAMEPLATE SHALL BE PROVIDED.
4. THE NAMEPLATE DESCRIPTION SHALL SHOW THE EQUIPMENT NUMBER AND SERVICE OF THE CONTROLLED EQUIPMENT. ALL PANELBOARDS SHALL HAVE NAMEPLATES STATING THE APPROPRIATE DESIGNATION, VOLTAGE, CONTINUOUS RATING, AND NUMBER OF PHASES. LIGHTING AND POWER PANELS SHALL BE SUPPLIED WITH COMPLETED CIRCUIT DIRECTORIES.
5. ALL WIRING SHALL BE IDENTIFIED AT EACH TERMINATION WITH PERMANENT, PRINTED, HEAT-SHRINKABLE PLASTIC SLEEVES OR WITH CLEAR, HEAT-SHRINKABLE SLEEVES THAT COVER ADHESIVE WRAP-ON MARKERS. CONTRACTOR SHALL USE A "BRADY" OR EQUAL TYPE WIRE MARKER. THE WIRE IDENTIFICATION NUMBER SHALL INCLUDE THE COMPLETE CIRCUIT OR INSTRUMENT NUMBER. THE WIRE IDENTIFICATION SHALL BE THE IDENTIFICATION SHOWN ON THE WIRING DIAGRAM. IF NONE IS SHOWN ON A WIRING DIAGRAM, THE OWNERS REPRESENTATIVE SHALL BE CONSULTED FOR PROPER IDENTIFICATION. ELECTRICAL CABLES SHALL BE LABELED WITH THE CIRCUIT NUMBER AND PHASE DESIGNATION AT EACH END OF CABLE. IF THE CABLE IS IN CONDUIT, THE CONDUIT TAG MAY SERVE AS AN INDICATION OF THE CIRCUIT NUMBER FOR POWER CIRCUITS.

© FLITEWAY TECHNOLOGIES, INC.

ISSUED FOR AGENCY REVIEW

REV.	ISSUED DATE	DESCRIPTION	BY	CK'D
1	07/29/2020	ISSUED FOR AGENCY REVIEW	DF	AMC
0	06/01/2020	ISSUED FOR CUSTOMER REVIEW	BDC	JK

SEAL

Prepared for:
ERM
Environmental Resources Management (ERM)
700 West Virginia St. #601
Milwaukee, WI 53204
Tel: (414) 289-9505 Fax: (414) 289-9552
www.erm.com

Prepared by:
Fliteway Technologies, Inc.
2129 East Birchwood Ave.
Cudahy, WI 53110
Tel: (414) 483-5600 Fax: (414) 483-1957
www.fliteway.com

SOIL VAPOR EXTRACTION SYSTEM
910 MAYER
MADISON, WI

SHEET TITLE
ELECTRICAL NOTES & LEGEND

APPROVED BY JK	CHECKED BY JK
DESIGNED BY BDC	DRAWN BY BDC
PROJECT NUMBER 15061	DRAWING NUMBER E-02
	SHEET 2 OF 3

ERM - 910 MAYER SVE TREATMENT SYSTEM - ELECTRICAL LOAD SCHEDULE								
Device	**Volts**	**Phase**	**HP/KW**	**Power Feed Source**	**Connected Load - 480V (Amps)****	**kVA**	**Duty Factor**	**Comments**
Blower B-101	480	3	10.0	MCE-1	14.0	11.64	1.00	
Transfer Pump P-101	480	3	0.75	MCE-1	1.6	1.33	1.00	
Process Room Heater	480	3	5.0	MCE-1	6.0	4.99	1.00	
Process Room Vent Fan	480	3	0.50	MCE-1	1.1	0.91	1.00	
Control Room Heater	480	3	5.0	MCE-1	6.0	4.99	1.00	
Control Room Vent Fan	480	3	0.50	MCE-1	1.1	0.91	1.00	
5kVA Step-Down Transformer***	480	1	5.00	MCE-1	6.0	2.88	1.00	
Total Power Allocation	**480**	**3**			**33.3**	**27.7**		

*Assumes correction for motor efficiency (calculated at 85%)
**Values taken from 2017 NEC
***Approximately 3 kVA is expected for misc. lighting and receptacle loads)

LOAD SCHEDULE

NOT TO SCALE

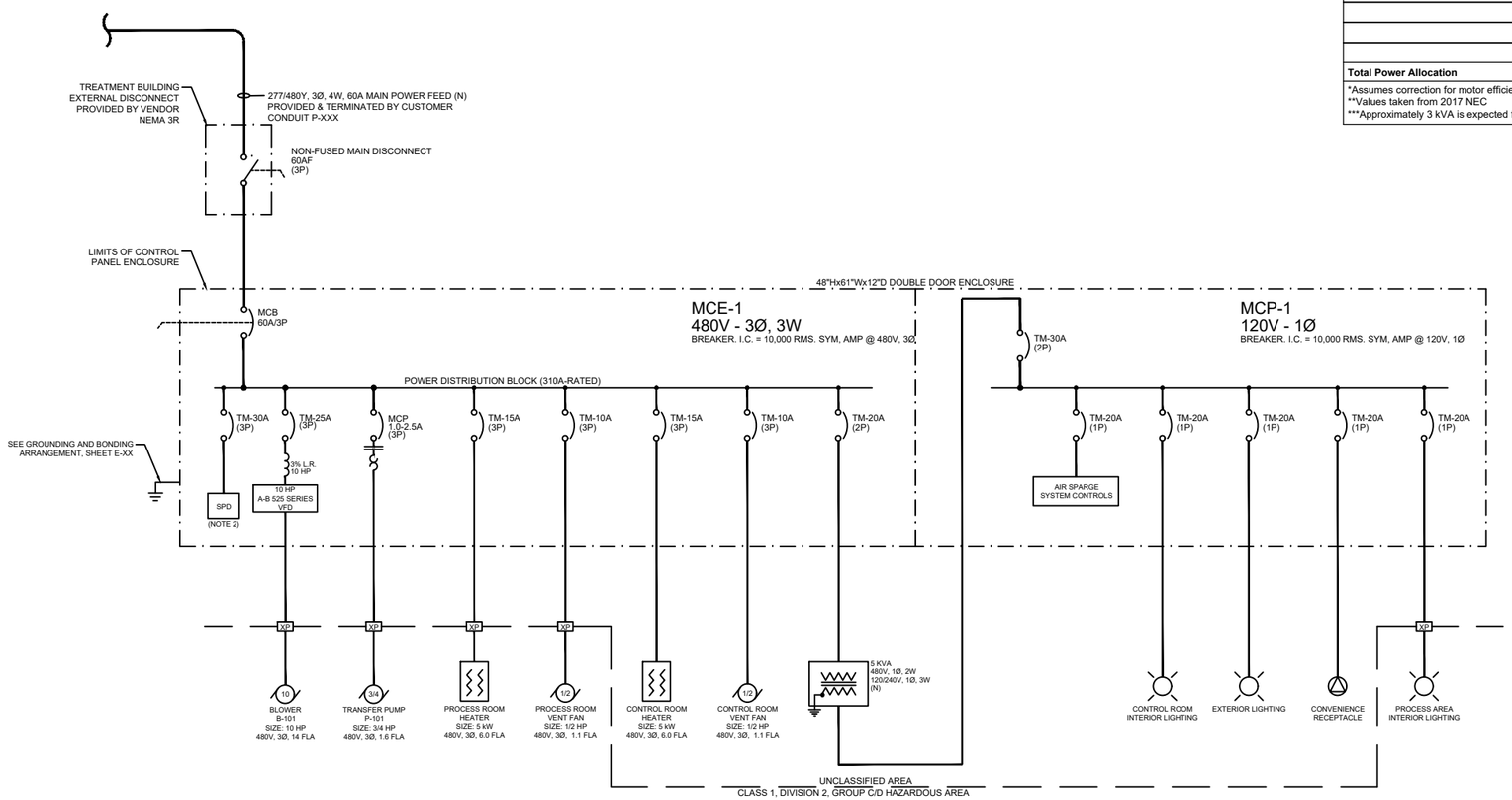

ELECTRICAL SINGLE-LINE DIAGRAM

NOT TO SCALE

DRAWING NOTES

1. SEE SHEET E-XX FOR ELECTRICAL GROUNDING LAYOUT DRAWING AND DETAILS.
2. MCE-1 SHALL BE EQUIPPED WITH A SURGE PROTECTION DEVICE (SPD) RATED AT A MINIMUM CAPACITY OF 50 KV.
3. DISCONNECT SHALL BE NEMA 3R AND BE VISIBLE-BLADE TYPE.
4. CIRCUIT BREAKER INTERRUPT CAPACITY BASED ON ESTIMATES OF EXPECTED CUSTOMER SHORT CIRCUIT CURRENT RATING COMBINED WITH LAYOUT GEOMETRY OF EQUIPMENT ON SITE.
5. EXIT LIGHTING SHALL BE INCLUDED WITH INTERIOR LIGHTING CIRCUIT & REQUIRE BATTERY BACKUP.

© FLITEWAY TECHNOLOGIES, INC.

ISSUED FOR AGENCY REVIEW

REV.	ISSUED DATE	DESCRIPTION	BY	CK'D
1	07/29/2020	ISSUED FOR AGENCY REVIEW	DF	AMC
0	06/01/2020	ISSUED FOR CUSTOMER REVIEW	BDC	JK

SEAL

Prepared for:
ERM
Environmental Resources Management (ERM)
700 West Virginia St. #601
Milwaukee, WI 53204
Tel: (414) 289-9505 Fax: (414) 289-9552
www.erm.com

Prepared by:
Fliteway Technologies, Inc.
2129 East Birchwood Ave.
Cudahy, WI 53110
Tel: (414) 483-5600 Fax: (414) 483-1957
www.fliteway.com

SOIL VAPOR EXTRACTION SYSTEM
910 MAYER
MADISON, WI

SHEET TITLE
ELECTRICAL SINGLE-LINE DIAGRAM

APPROVED BY JK	CHECKED BY JK
DESIGNED BY BDC	DRAWN BY BDC
PROJECT NUMBER 15061	DRAWING NUMBER E-03
	SHEET 3 OF 3

HTX: Y:\ClntM-P\910 Mayer LLC\0441161\Task 2 - Former Spice Room\0441161-05_Electrical.dwg, 7/29/2020

APPENDIX B DESIGN SPECIFICATIONS

910 Mayer LLC

Former Spice Room Area
910 Mayer Avenue

Madison, WI

Soil Vapor Extraction System Installation

Specifications

July 28 2020

Project No.: 0441161

The business of sustainability

ERM

Document details	The details entered below are automatically shown on the cover and the main page footer. PLEASE NOTE: This table must NOT be removed from this document.
Document title	Soil Vapor Extraction System Installation
Document subtitle	Specifications
Project No.	0441161
Date	July 28 2020
Version	1.0
Author	Andrew Corcoran
Client Name	910 Mayer LLC

CONTENTS

SOIL VAPOR EXTRACTION SYSTEM INSTALLATION SPECIFICATIONS 1

PART 1 – GENERAL 1

1.01 DEFINITIONS 1
1.02 SCOPE OF WORK 2
1.03 CONTRACT ADMINISTRATION 5
1.04 Submittals 6
1.05 SUBMITTALS 6
1.06 GENERAL REQUIREMENTS 7

PART 2 – MATERIALS AND METHODS 11

2.01 GENERAL REQUIREMENTS 11
2.02 SOIL VAPOR EXTRACTION SYSTEM 12

PART 3 – EXECUTION 21

3.01 GENERAL REQUIREMENTS 21
3.02 PAINTING 23
3.03 DISCHARGE STACK 24
3.04 TREATMENT AREA AND EQUIPMENT 24
3.05 FACILITY FLOOR CRACK SEALING 24
3.06 ELECTRICAL CONDUIT, WIRE, AND COMPONENTS 25

SOIL VAPOR EXTRACTION SYSTEM INSTALLATION SPECIFICATIONS

PART 1 – GENERAL

1.01 DEFINITIONS

A. Application for Payment. In accordance with the Subcontractor Agreement.

B. Change Order. In accordance with the Subcontractor Agreement.

C. Contract Price. The moneys payable by ERM to Subcontractor for completion of the Work in accordance with the Subcontractor Agreement.

D. Contract Times. The number of days or the dates stated in the Subcontractor Agreement to: (i) achieve Milestones, if any, (ii) achieve Substantial Completion; and (iii) complete the Work so that it is ready for final payment.

E. Subcontractor. Bidder awarded Work.

F. Drawings. That part of the Subcontractor Agreement prepared or approved by ERM that graphically shows the scope, extent, and character of the Work to be performed by Subcontractor. Subcontractor submittals are not Drawings as so defined.

G. Field Order. A written order issued by Engineer which requires minor changes in the Work but which does not involve a change in the Contract Price or Contract Times.

H. Milestone. A principal event specified in the Contract Times relating to an intermediate completion date or time prior to Substantial Completion of all the Work.

I. Owner. 910 Mayer LLC.

J. Progress Schedule. A schedule prepared and maintained by Subcontractor, describing the sequence and duration of the activities comprising the Subcontractor's plan to accomplish the Work within the Contract Times.

K. Schedule of Values. A schedule, prepared and maintained by Subcontractor, allocating portions of the Contract Price to various portions of the Work and used as the basis for reviewing Subcontractor's Application for Payment.

L. Site. Lands or areas indicated in the Drawings as being furnished by Owner upon which the Work is be performed, including rights-of-way and

easements for access thereto, and such other lands furnished by Owner which are designated for the use of Subcontractor.

M. Specifications. That part of the Subcontractor Agreement consisting of written requirements for materials, equipment, systems, standards, and workmanship as applied to the Work, and certain administrative requirements and procedural matters applicable thereto.

N. Substantial Completion. The time at which the Work (or a specified part thereof) has progressed to the point, where in the opinion of Engineer, the Work (or a specified part thereof) is sufficiently complete, in accordance with the Subcontractor Agreement, so that the Work (or a specified portion thereof) can be utilized for the purposes for which it is intended.

O. Supplier. A manufacturer, fabricator, supplier, distributor, materialman, or vendor having a direct contract with Subcontractor to furnish materials or equipment to be incorporated in the Work by Subcontractor.

P. Work. The entire construction or various separately identifiable parts thereof required to be provided under the Subcontractor Agreement. Work includes and is the result of performing or providing all labor, services, and documentation necessary to produce such construction, and furnishing, installing, and incorporating all materials and equipment into such construction, all as required by the Subcontractor Agreement.

Q. Work Change Directive. A written statement to Subcontractor issued on or after the effective date of the Subcontractor Agreement and signed by ERM ordering an addition, deletion, or revision in the Work, or responding to differing or unforeseen subsurface or physical conditions under which the Work is to be performed or to emergencies. A Work Change Directive will not change the Contract Price of the Contract Times but is evidence that the parties expect that the change ordered or documented by a Work Change Directive will be incorporated in a subsequently issued Change Order following negotiations by the parties as to its effect, if any, on the Contract Price or Contract Times.

1.02 SCOPE OF WORK

A. Work under this Subcontractor Agreement includes furnishing all labor, materials, equipment, water, light, power, transportation, supervision, telecommunications, taxes, and incidentals necessary to complete the Work identified herein. Performance of Work shall comply with applicable federal, state, and local codes, and all special instructions. This Work includes, but is not limited to, the following:

1. Prepare and implement a Site-specific health and safety plan for the Work.

2. Conduct daily health and safety tailgate briefings with all personnel prior to the initiation of Work for each day.

3. Implement Site health and safety program.

4. Obtain all applicable construction permits required to do the Work under Subcontractor Agreement.

5. Locate all public and private utilities prior to initiation of subsurface work. Daylight utilities as necessary to facilitate safe installation of system piping and well vaults.

6. Mobilize personnel, equipment and facilities required to complete the Work to the Site.

7. Coordinate Work with Engineer and Owner as necessary to avoid interference with facility operations.

8. Prepare electrical design for power service from main building to treatment building. Provide shop drawing(s) of electrical design for review and approval. This task to be performed by a subcontractor that is qualified to perform electrical design.

9. Sawcut and remove all concrete as necessary for installation of piping and well vaults. Repair concrete to match existing and in accordance with contract drawings. Dispose of concrete off-site.

10. Excavate soil as necessary for installation of piping and well vaults, including moving all soil from work area to an Owner designated staging area outside of the building. Contractor will provide plastic sheeting beneath stockpile prior to initial placement and cover stockpile. Contractor will maintain stockpile cover for duration of the work and use dust suppression techniques as directed by engineer. Profiling and disposal will be the responsibility of the Owner.

11. Install twenty (20) soil vapor extraction (SVE) well vaults and associated subgrade piping as shown on the Contract Drawings and specified herein, including procurement of all materials, pipe and associated appurtenances.

12. Install piping supports as shown on the Contract drawings and specified herein, including procurements of all materials.

13. Procure, place and compact structural backfill material into the trenches as necessary to match grade of existing subbase material. Compact subgrade in accordance with this specification package prior to placing backfill.

14. Repair concrete as shown on the Contract Drawings and specified herein, including procurement of all materials and restoration of surfaces to existing conditions.

15. Complete necessary earthwork for installation of the concrete pad, as shown on the Contract Drawings and specified herein, including but not limited to topsoil removal, grading, excavating, and compaction of subbase.

16. Install a 6-inch thick concrete pad as shown on the Contract drawings and specified herein, including but not limited to procurement of all associated equipment and materials.

17. Offload and set prefabricated treatment system building on the concrete pad in the location indicated on the Contract Drawings. The building will be classified as an explosion-proof, Class 1 Division 2 building. For purposes of this bid, assume that building can be offloaded and moved with a high capacity forklift.

18. Install piping and conduit as necessary to connect the prefabricated treatment system to the piping, electrical service, and discharge stack as shown on the Contract Drawings and specified herein, including procurement of all associated equipment and materials, mounting of equipment per manufacturers requirements, and routing of all associated piping. Exterior piping is to be insulated and heat traced (heat trace provided by others).

19. Install exhaust piping and exhaust stack as shown on the Contract Drawings and specified herein, including procurement of all associated materials, pipe hangers, pipe supports, pipe straps and no-loss cap construction. Exhaust piping is to be routed vertically to roof. Affix stack to 4’ above roof. Stack piping is to be insulated with a drain port installed at piping low point.

20. Pressure test all piping as specified herein, including providing all pumps, valves, fitting and gauges necessary to complete the testing.

21. Install electrical components as necessary to provide power to treatment system, including but not limited to procurement of all associated materials, mounting and routing of conduit as necessary, pulling, and terminating wires, testing of equipment, and adjustments as necessary to ensure proper operation.

22. Install pallet rack post protectors (bolt to floor type see Appendix B: Bill of Materials) around SVE piping risers inside the building to protect them from damage.

23. Provide start-up and testing assistance of the new system, including providing all equipment and personnel necessary.

24. Following start-up of the blower, Subcontractor shall check both existing and repaired portions of the floor and outside concrete for audible air leakage into subsurface. If leaks are detected, they shall be sealed as specified herein.

25. Clean-up of Site and final Site restoration, including disposal of all construction debris.

26. Demobilization of all personnel, equipment, and facilities from the Site.

B. The following portion of the Work are conditional add-ons. This work may be awarded to the Subcontractor's scope of work or awarded to others at ERM's discretion. Work will be contracted and coordinated directly by ERM. If installed by others, It will be the responsibility of the Subcontractor to coordinate onsite installation of required equipment, as outlined in the Subcontractor scope of work.

1. Installation of the eighteen (18) additional SVE wells.

C. The following portion of the Work will be completed by others. This work will be contracted and coordinated directly by ERM. It will be the responsibility of the Subcontractor to coordinate onsite installation of required equipment, as outlined in the Subcontractor scope of work.

1. Treatment system building, equipment, and components will be completed to a state such that the building can be placed as identified in these Specifications and the Contract Drawings.

1.03 CONTRACT ADMINISTRATION

A. Change Procedures

1. In accordance with the Subcontractor Agreement.

B. Material Measurement

1. In accordance with the Subcontractor Agreement.

C. Applications for Payment

1. In accordance with the Subcontractor Agreement.

1.04 Submittals

A. American Association of State Highway and Transportation Officials: AASHTO M252 & M278.

B. ASTM, “American Society for Testing and Materials”: ASTM A53, ASTM A120, ASTM D1784, ASTM D1785, ASTM D2466, ASTM D2855, ASTM F439, ASTM F441, ASTMF493, and ASTM F656.

C. Manufacturer’s Qualifications: Products used in the Work of this section shall be produced by manufacturers regularly engaged in the manufacture of similar items and with a history of successful production acceptable to Engineer.

D. Installer’s Qualifications: Use adequate numbers of skilled personnel who are thoroughly trained and experienced in the necessary crafts and who are completely familiar with the specified requirements and the methods needed for proper performance of the Work of this Section.

E. Basis of Acceptance: The manufacturer’s recommended installation procedures, when approved by Engineer, will become the basis for inspecting and accepting or rejecting actual installation procedures used on this Work.

1.05 SUBMITTALS

A. Submittals of all materials required to establish compliance with the specifications, shall include but not be limited to the following items:

B. Descriptive literature, bulletins, and/or catalog cut sheets of the equipment which include complete manufacturer’s specifications and materials of construction.

C. Samples: Submit samples illustrating range of paint colors available for each surface finishing scheduled for painting for approval.

D. Special handling instructions and requirements for storage and protection prior to installation.

E. Materials list: Submit a complete list of all materials and equipment proposed to be furnished and installed under this portion of the Work, giving manufacturer’s name, catalog number, and catalog cut for each item where applicable.

F. Manufacturer’s recommendations: Accompanying the materials list, submit copies of the manufacturer’s current recommended method of installation for materials provided.

G. Submit warranties, as applicable.

H. Submit Operation and Maintenance Manual(s), as applicable.

1.06 GENERAL REQUIREMENTS

A. Codes and Conditions

1. All Work performed hereunder shall conform to the building, fire, and safety codes, the ordinances, and the rules and regulations of any legal body having jurisdiction. The Subcontractor shall obtain and pay for all permits and inspections required. When the material or construction specified herein is of a better quality or a larger size than required by the governing codes, the provisions of this specification shall prevail. The Subcontractor shall provide any additional material and labor required for compliance with the codes, rules and regulations without extra cost, even though the Work is not specified herein or indicated on the Drawings.

2. Except as modified herein, the current issue of the NEC (National Electrical Code) is made a party of this specification.

3. The applicable portion, of the current issue of codes and standards referenced herein, shall be made a part of this specification.

4. Except as modified herein, the manufacturer's recommendations for installation of materials and equipment is made a part of this specification.

B. Bonding

1. Not required.

C. Safety Requirements

1. Subcontractor shall be familiar with and comply with OSHA safety requirements set forth in 29 CFR Parts 1910 and 1926, and all federal, state, and local regulations, as applicable. The Subcontractor shall bear sole responsibility for any penalties and down time charges imposed for noncompliance.

2. Subcontractor shall maintain a copy of the health and safety plan on-Site during all phases of the project, and shall ensure that all on-Site personnel have reviewed and are familiar with the plan.

3. Subcontractor shall be responsible for directing the use of personal protective clothing and equipment to minimize employee exposure in accordance with OSHA standards. The Subcontractor's site-

specific health and safety plan shall include provisions for emergency conditions and information concerning local emergency facilities.

D. Project Documentation

1. Construction record drawings and logs. Subcontractor shall:

   a. Accurately record all changes in the Work on one set of Drawings to be kept at the Site.

   b. Mark changes neatly and clearly using colored ink or pencil.

   c. Make construction record drawings and logs available to Engineer or Owner upon request.

   d. Show the following changes and any other applicable changes on the construction record drawings: Change in location or elevation of project components; change in slope of piping system or of pitched surfaces; relocation of equipment; change in materials; change in topographical contours of finished grades; additions to the project; elimination of project component; relocation of existing underground utilities; modifications to mechanical or electrical installations; or, unforeseen modifications made to existing structures made necessary by requirements of the Work.

   e. Record as-built locations of buried, embedded, or concealed piping or conduit installed during the completion of the Work.

   f. Complete a drawing control log to document the receipt and issuance of Drawings. Include drawing number and title, revision number and date, date and number of documents received or issued.

E. Meetings

1. Subcontractor shall perform daily safety meetings. The meetings shall be attended by Subcontractor and all Subcontractor's employees working at the Site and Engineer or Engineer's representative. Meeting attendance and content shall be documented by Subcontractor and a log of safety meeting information shall be maintained on-Site.

F. Use of Premises

1. Subcontractor shall not extend operations beyond assigned Work areas.

2. Subcontractor shall be responsible for repairing damages caused to private or public property at Subcontractor's expense.

3. Subcontractor shall handle and store equipment, materials, and supplies in a safe and orderly manner and shall keep the Work area and staging area clear of waste materials or rubbish.

4. Limits of Work area will be approved by Engineer or Owner prior to beginning Work.

G. Utilities

1. Care should be taken not to disturb the existing utilities. Subcontractor shall, at its own expense, repair any damage caused by Subcontractor to marked utility lines.

2. Subcontractor shall be responsible for requesting clearance of all public utilities prior to performing any Site Work.

3. Subcontractor shall be responsible for contracting with a private utility contractor to mark private subsurface utilities that may be located in subgrade work areas. Private utility locator shall use ground penetrating radar (GPR) technology for locating utilities. Other locating methods may be used in conjunction with GPR.

4. Subcontractor shall verify that all utilities have been located, marked out, isolated, disconnected, or protected as required prior to the start of Work.

5. If unmarked utilities are encountered, active or abandoned, during the Work, the Subcontractor shall immediately stop Work and notify the Engineer and Owner.

H. Demobilization

1. Subcontractor shall be responsible for restoration and cleanup of the Site to pre-construction conditions.

I. Packing, Shipment, and Risk of Loss

1. No charge for packing or cartage will be allowed for except as set forth herein. Unless otherwise specified, the price of all equipment and materials purchased hereunder shall be freight on board (FOB) to the Site. Title to and risk of loss of any equipment and materials covered hereby shall not pass to the Owner until the Work herein is

completed to the acceptance of the Engineer. Subcontractor shall be responsible for and expense of preparing and filing claims against carriers for loss or damage to equipment and materials in transit.

J. Care and Storage of Materials

1. The Subcontractor shall be responsible for proper loading and protection of equipment and material items delivered to the Site for inclusion in the Work. Subcontractor shall replace at its sole expense all Subcontractor-furnished materials damaged during transportation to the Site.

K. Materials

1. All other materials, not specifically described but required for completion of Work shall be new, first quality of their respective kind, and subject to the approval of Engineer.

2. Material Furnished by the Owner. Any equipment and material furnished by the Owner will be available to the Subcontractor after the Owner's receipt of material and equipment. The Subcontractor shall be responsible for loss or damage to owner furnished items that Subcontractor has accepted from the Owner until acceptance of the completed Work by Owner.

3. Equipment Accessibility. Subcontractor shall install all equipment and material such as valves, junction boxes, pull boxes, raceways, panel boards, switches, circuit breakers, etc. in readily accessible locations which do not interfere with the operation and maintenance of said equipment, or other nearby equipment, nor shall they obstruct walkways, passageways, ladders, and stairs. When such cases of interference arise and the location of the equipment is definitely indicated on the Drawings, Subcontractor shall promptly notify Engineer before Work progresses to the extent that changes are necessary.

PART 2 – MATERIALS AND METHODS

2.01 GENERAL REQUIREMENTS

A. Products

1. Information regarding the specified materials of construction including, but not limited to, placement, capacity, size, accessories, materials of construction, and mechanical identification can be found in the Drawings and Appendix B – Bill of Materials.

2. Proprietary products: Whenever materials or equipment are described using a certain brand, make, supplier, manufacturer or by specification, such naming shall be regarded as a standard and be intended to convey function, design features, general style, type, materials of construction, character and quality of material or equipment, serviceability and other described essential characteristics. Any deviations or substitutions require prior approval by Engineer.

B. Execution

1. Existing Conditions

   a. Inspection

      i. Prior to all Work, carefully inspect the installed Work of all other trades and verify that all such Work is complete to the point where the installation of current Work may properly commence.

      ii. Verify that the Work may be installed in accordance with all pertinent codes and regulations, the original design, and the referenced standards.

      iii. Where applicable, verify that electric power is available and of the correct characteristics.

2. Discrepancies

   a. In the event of discrepancy, immediately notify Engineer.

      i. Do not proceed with installation in areas of discrepancy until all such discrepancies have been fully resolved.

C. Installation

1. Install the Work in strict accordance with the manufacturer's recommendations.

D. Cleaning

1. Clean all grease, dirt, and other foreign materials from exposed equipment surfaces prior to installation.

2. Touch up all marred or abraded surfaces.

E. Testing

1. Upon completion of this portion of the Work, and prior to its acceptance by Engineer, make all required tests and adjustments for free and smooth operation of mechanical systems.

2.02 SOIL VAPOR EXTRACTION SYSTEM

A. System Description

1. The system consists of the following components: SVE wells and associated vaults, subgrade and above-grade piping, treatment system and building, conduit, and vapor discharge stack.

B. Structural Backfill: The structural backfill material shall meet the following requirements.

1. The backfill material shall be of acceptable quality, free from large or frozen lumps, wood, or other extraneous matter.

2. Structural backfill material shall be WisDOT 210 gravel or Engineer approved equal.

C. PVC and CPVC Pipe: The PVC/CPVC pipe and fitting shall meet the following requirements.

1. PVC

a. PVC Pipe: PVC pipe (Schedule 40 and 80) conforming to ASTM D1784 and D1785;

b. PVC Pipe Fitting: PVC pipe fittings (Schedule 40 and 80) conforming to ASTM D2466;

c. PVC Cement: PVC cement conforming to ASTM D2855.

2. Carbon Steel

   a. Carbon Steel Pipe: Carbon steel pipe (Schedule 40) conforming to ASTM A53.

D. Pipe/Conduit Supports

1. Aboveground piping and instrumentation shall be supported according to manufacturer's recommendations to prevent sagging and vibration during operation.

2. Hanging Pipe Supports Clamps: Provide McMaster-Carr Model 29615T1, 29615T2 or 29615T3 stainless steel finish, or Engineer approved equal.

3. Hanging Pipe Support Clevis: Provide McMaster-Carr Model 3309T522, 3309T562, 3309T582 or 3309T632 stainless steel finish, or Engineer approved equal.

4. Hanging Rod: Provide hanger rod in appropriate sizes and lengths as necessary. Provide rod nuts as necessary.

5. Wall Pipe Support: Provide pipe support hangers or fasteners for piping and conduit to be attached to adjacent walls (interior and exterior).

6. Pipe shall be supported on existing pipe racks where possible.

E. Painting: Painting includes all surface preparation, priming, and field painting of exposed interior and exterior items as indicated in the drawings and specifications.

1. Painting shall be completed at the direction of the Engineer.

2. Where an item or surface is not specifically mentioned, paint the same as similar adjacent materials or surfaces. If color or finish is not designated, Engineer will select from standard colors or finishes available.

3. Painting includes all accessory materials including but not limited to: brushes, rollers, drop cloths, tape, linseed oil, turpentine, paint thinners, and other materials not specifically indicated but required to achieve finishes specified for commercial quality.

4. Primer, Intermediate, and Finish coats shall all be from the same coatings manufacturer. Paint materials and products shall be compatible with and appropriate for use on surface to be coated.

F. Crack Sealing: Seal cracks and expansion joints in flooring as necessary to stop audible leakage of air into the subsurface.

1. For cracks less than ½" in width use the following sealant:

   a. Sikaflex-1A, low-VOC polyurethane elastomeric sealant.

2. For cracks greater than ½" in width use the following sealant:

   a. Sikaflex-2C SL, two component, self-leveling, polyurethane, elastomeric sealant.

G. Concrete Paving

1. Concrete work shall conform to all requirements of the current American Concrete Institute (ACI) 301 "Specifications for structural concrete for buildings" with supplemental requirements as provided in the Specifications and Drawings. Deviations must be approved by Engineer.

2. The following specified products shall be used in completion of this portion of Work.

   a. Cement: ASTM C150 Type I – Normal.

   b. Fine and Coarse Aggregates: ASTM C33.

   c. Water: Clean and not detrimental to concrete.

   d. Admixtures: ASTM C494. Chloride based admixtures are prohibited in all reinforced concrete.

   e. Reinforcing Steel: ASTM A615, A616, or A617, Grade 60,000 psi (60 ksi) yield strength.

   f. Welded Wire Fabric: ASTM A185; 6x6-W5.5 x W5.5.

   g. Tie Wire: Minimum 16-gauge annealed type.

   h. Chairs, Bolsters, Bar Supports, Spacers will be sized and shaped for strength and support of reinforcement during concrete placement conditions.

   i. Concrete Forms: Wood, profiled to suit conditions.

   j. Form Release Agent: Colorless mineral oil that will not stain concrete, or absorb moisture. Motor oil or fuel shall not be used for this purpose.

k. Corners: Fillet, wood strip type; 0.25 x 0.25-in size; maximum possible lengths.

l. Nails, Spikes, Lag Bolts, Through Bolts, and Anchorages: Sized as required.

3. Notify Engineer a minimum of 24 hours prior to placement of concrete.

4. Prepare earth subgrade by excavating and filling material to create a smooth and level base. Compact subgrade to 95% of the Modified Proctor prior to placing subbase.

5. Place and compact ¾-inch aggregate subbase on top of prepared subgrade as indicated in the Drawings until there is no appreciable displacement under compaction equipment. Backfill material shall be compacted with a minimum of 4 passes of a vibratory plate compactor.

6. Ensure reinforcement, electrical conduits, PVC pipes, and other items to be cast into concrete are not disturbed during concrete placement.

7. Place #3 x 1-ft dowel 12 inches on center, on each side, to ensure concrete integrity.

8. Concrete shall be ready-mixed type conforming to ASTM C94 with twenty eight day compressive strength of 4,000 psi. The slump shall be 4 inches (plus or minus 1 inch) in accordance with ASTM C143.

9. Concrete shall be placed in a monolith.

10. Interior slabs shall have steel trowel finish. Exterior slabs shall have light broom finish.

11. Provide expansion joints and saw-cut joints as required.

12. Defective concrete is concrete not conforming to the required lines, details, dimensions, tolerances, or specified requirements. Repair or replacement of defective concrete will be determined by the Engineer. Replacement of imperfect concrete shall be the sole responsibility of the Subcontractor, and at the Subcontractor's expense.

H. Electrical Components and Wiring

1. Pull and Junction Boxes (approved manufacturers listed in no particular order):

    a. Cooper Industries (Crouse-Hinds Division).

    b. Killark, Inc.

    c. Appleton Electrical Products, Inc.

2. Wire and Cable (approved manufacturers listed in no particular order):

    a. American Insulated Wire Corp.

    b. Carol Cable Co. Inc.

    c. Senator Wire and Cable Co.

    d. Southwire Company.

    e. Beldon, Inc.

3. Connectors for Wires and Cable Conductors (approved manufacturers listed in no particular order):

    a. AMP.

    b. 3M Company.

    c. O-Z/ Gedney Co.

    d. Square D Company.

4. Rigid Galvanized Steel Conduit

    a. Conduit shall be steel, rigid, heavy wall, supplied in standard lengths, threaded on both ends, and zinc coated inside and outside, including the threads. The zinc coating shall be applied by the hot dipped galvanized process on both the outside and the inside surfaces with the outside maintaining a minimum coating weight of 1.25 ounces of zinc per square foot. The coating shall not peel, flake or scale and the conduit ends shall be free of burs. The zinc coating on the threads may be applied by a process other than the hot dipped method. The threads shall be protected from damage with a zinc-coated coupling on one end and a thread protector on the other end.

b. Unless otherwise specified, the conduit shall conform to the latest editions of the American Standard Specification of Rigid Steel Conduit Zinc Coated and Standard of Underwriters Laboratories UL6- Rigid Metallic Conduit.

c. Rigid Galvanized Steel Conduit approved manufacturers (listed in no particular order):

i. Allied Tube and conduit.

ii. Republic Conduit.

iii. Or Engineer approved equal.

5. Flexible Conduit

a. Flexible conduit shall consist of an outer jacket and a core. The outer jacket shall be moisture resistant, oil resistant, liquid tight, and plastic sheathed. The core shall be either flexible metallic tubing, or flexible reinforced nonmetallic tubing.

6. Circuit and Motor Disconnects

a. Electrical Component Standards: Provide components complying with NFPA 70 "National Electrical Code" and which are listed and labeled by UL. Comply with UL Standard 98 and NEMA Standard KS 1.

b. Provide circuit and motor disconnect switches in types, sizes, duties, features ratings, and enclosures as indicated. Provide NEMA 12 enclosure for indoor switches, and other indicated locations provide NEMA 4/4X enclosures with raintight hubs and “O-ring” gasket seal. For motor and motor starter disconnects, provide units with horsepower ratings suitable to the loads.

c. Safety Disconnects:

i. The switch enclosure shall include safety door interlocks which prevent the switch door from being opened with the switch in the “ON” position, except by authorized personnel using a screw driver defeat mechanism.

ii. Facilities shall be provided for safety padlocking the operating handle in the “OFF” position with as many as three padlocks. The padlock(s) shall directly

interfere with the operating handle and shall be fully visible.

iii. Line side terminations shall be fully barriered to prevent inadvertent contact by hands or fish tape.

iv. Switch blades shall be fully visible when the door is open.

d. Circuit and motor disconnects approved manufacturers (listed in no particular order):

i. Appleton Electric Co.

ii. Cutler-Hammer Inc.

iii. General Electric Co.

iv. Square D Company.

v. Allen-Bradley.

7. Wires and Cables

a. NFPA 70 "National Electrical Code”

i. Conform to applicable codes and regulations regarding toxicity of combustion products of insulating materials.

b. UL Compliance - provide components which are listed and labeled by UL under the following standards:

i. UL Std. 83 “Thermoplastic-Insulated Wires and Cables.”

ii. UL Std. 486A “Wire Connectors and Soldering Lugs for Use with Copper Conductors.”

iii. UL Std. 854 “Service Entrance Cable.”

c. NEMA/ICEA Compliance - Provide components which comply with the following standards:

i. WC-5 “Thermoplastic-Insulated Wire and Cable for the Transmission and Distribution of Electrical Energy.”

ii. WC-7 “Cross Linked Thermosetting Polyethylene-Insulated Wire and Cable for the Transmission and Distribution of Electrical Energy.”

d. Sizing of Conductors:

i. Unless otherwise required or directed by the Engineer, conductors shall be furnished in the sizes and types specified on the Drawings. No wire for lighting, power, or motor control circuits shall be smaller than No. 12 AWG.

ii. Where the size of the wiring is not given on the Drawings, it shall be of such size that the voltage drop on the branch circuit is not more than 2 percent. The voltage drop in motor feeder shall not be more than 3 percent at full load from the motor control center (MCC) to the motor terminal(s).

e. Wires and Cables, General Requirements:

i. Provide wire and cable suitable for the temperature, conditions, and location where installed.

ii. Provide solid conductors for power and lighting circuits no. 10 AWG and smaller.

iii. Conductor material shall be copper for all wires and cables.

iv. Provide THHN/THWN insulation for all conductors for branch circuit power, lighting, control, signal, and alarm wiring, 120 to 480 volts. Where cable is for signal wiring below 120 volts cable shall be #18 twisted pair similar to above with aluminum/polyester shield and PVC jacket. All wire shall have insulation rating of not less than 600 Volts.

v. Color Coding for phase identification in accordance with the following table:

240/120 Volts	Phase	480/277 Volts
Black	A	Yellow
Red	B	Brown
Blue	C	Orange
White	Neutral	White

Green	Ground	Green

PART 3 – EXECUTION

3.01 GENERAL REQUIREMENTS

A. Backfill and Compaction

1. The excavation shall be backfilled using suitable clean fill material in a manner consistent with current engineering standards. Material used for backfill will be inert, non-expansive, free of organic matter, debris, rubble, frozen material, rocks greater than 3-inches in diameter, and other deleterious substances, and of such quality that it will compact thoroughly without excessive voids when watered and rolled. Imported fill material must be approved by Engineer prior to use.

2. Backfilling shall not begin before Engineer has inspected the grade and alignment of the pipe, the bedding of the pipe, the joints between the pipe, and pressure testing the pipes. If backfill material is placed over the pipe before inspections are made, the Subcontractor shall reopen the trench in order for an inspection to be made at the expense of the Subcontractor.

3. Pipe bedding shall consist of coarse grained soil, such as gravel or sand, or a coarse grained soil containing fines, such as a silty sand or clayey sand. The particle size shall not exceed one-half inch. Imported fill material must be approved by Engineer prior to use.

4. Backfill material shall be placed in maximum 9-inch loose lifts.

5. Backfill material shall be compacted with a minimum of 4 passes of a vibratory plate compactor.

6. Return excavation to existing grade and match surface completion to surrounding areas.

B. Piping Installation

1. Piping shall be installed plumb and perpendicular or sloped where required on Contract Drawings.

2. Painting: Marred or abraded surfaces shall be cleaned and refinished in accordance with the manufacturer's recommendations.

3. Route piping generally as shown on the Construction Drawings. Final routing of piping to be determined in field and approved by Owner and Engineer.

4. Cut pipe to exact measurement and install without forcing or springing.

5. Install piping to allow for expansion and contraction at each inlet and outlet to equipment without stressing pipe, joints or connected equipment.

6. Route piping in an orderly manner maintaining the required elevations.

7. Install piping to conserve space and not interfere with use of space.

8. Pressure Testing

    a. Provide a pressure test of the piping systems. Testing plan must be approved by Engineer prior to testing. If conducting pneumatic test, pressure shall not exceed 10 pounds per square inch (psi).

    b. Isolate any equipment (e.g. blowers, etc.) that may be damaged by the test.

    c. The piping system may be tested in sections with approval from Engineer.

    d. Pressure testing will last for a minimum of 0.5 hour after stabilization of pressure, with no loss in pressure.

9. Underground Piping Installation

    a. Pipe shall be installed in accordance with the manufacturer's recommendations and as indicated on the Contract Drawings and Specifications herein.

    b. Pipe shall be carefully placed into the trench without dropping and avoiding striking rocks or hard objects by either manual or mechanical methods. Lift or roll pipe when moving, do not drag over gravel or rock.

    c. Precautions shall be taken to prevent foreign material from entering the pipe before or while it is being placed. Seal open ends of pipe when pipe laying is not in progress.

C. Pipe Hangers and Supports

1. Rigidly anchor pipe to stable structures where necessary. Provide pipe guides so that movement takes place along the axis of pipe only.

2. Install concrete sleeve anchors in manufacturer's approved fashion where necessary for attaching supports to concrete and masonry block.

3. Support pipe within two feet of end of all pipe runs.

4. Support exhaust stack riser piping independently of connected horizontal piping.

5. Provide additional supports for concentrated loads such as valves, or specialties, and at changes in direction.

6. Support all valves, fittings, and tubing such that all swing joints make and break freely and such that undue stress is not placed on tubing by valves or other in-line components.

D. Valve Installation

1. Upon completion of this portion of the Work, and prior to its acceptance by Engineer, make all required tests and adjustments for free and smooth operation of all valves.

2. Repair to original condition or replace any items damaged prior to, or during installation.

E. Mechanical Systems

1. Upon completion of this portion of the Work, and prior to its acceptance by Engineer, make all required tests and adjustments for free and smooth operation of mechanical system.

3.02 PAINTING

A. Comply with manufacturer's instructions.

B. Do not apply paint materials when the surface and ambient temperatures are outside the temperature ranges required by the paint product manufacturer.

C. Clean all materials prior to start. Remove surface contamination, dirt, oil, grease and prep per manufacturer's instructions; including solvent-wipe, sanding, and tack cloth as directed.

D. Remove or mask gauges, electrical plates, name plates, descriptive data on equipment to be painted.

E. Remove unfinished louvers, grilles, covers, and access panels on mechanical and electrical components and paint separately.

F. Prime and paint insulated and exposed pipes, conduit, boxes, ducts, hangers, brackets, fasteners, collars, and supports, except where items are prefinished.

G. Apply each coat to a uniform smooth finish, allowing adequate drying time between coats.

3.03 DISCHARGE STACK

A. The discharge stack pipe shall terminate a minimum of 5 feet above the roof, in a location that is a minimum of 25 feet away from any window, air intake or other opening into the occupied spaces of the building.

B. The discharge stack shall terminate with a no loss cap.

3.04 TREATMENT AREA AND EQUIPMENT

A. Subcontractor shall provide all necessary personnel, equipment, and materials to complete the assembly of the treatment system per the manufacturer's recommendations.

B. Make pipe and conduit connections to Treatment System Building and install air discharge stack per manufacturer's recommendations.

C. Secure equipment per the manufacturer's recommendations. Provide additional support using Unistrut.

D. The Subcontractor shall be responsible for repairing damages caused to private or public property at their expense.

E. The Subcontractor shall handle and store equipment, materials, and supplies in a safe and orderly manner and shall keep the Work area and staging area clear of waste materials or rubbish.

F. If Work around either public or private utilities is necessary, care should be taken not to disturb the existing utilities. The Subcontractor shall, at its own expense, be responsible for repairing any damage caused by the Subcontractor to marked utility lines.

3.05 FACILITY FLOOR CRACK SEALING

A. Sealing Floor Joints and Cracks

1. Prior to beginning sealing of a joint or crack, prepare and clean the joint or crack. Joint surfaces must be sound, clean, dry, and free of all dirt, oil, and grease. Curing compound residues and any other foreign material must be thoroughly removed. At a minimum, clean using a wire brush and a wet/dry vacuum (or alternate method

approved by Engineer) to clean all joint and crack surfaces. Engineer will inspect the cleanliness of the joints prior to allowing joint sealing. Subcontractor will be responsible for moving any materials stored in the way of joint sealing as directed by the Engineer.

2. Subcontractor is responsible for any dust suppression and disposal of dust and/or water that may be used in the cleaning process.

3. Any cracks, floor imperfections, and other non-floor joints to be sealed must be determined and approved by Engineer prior to filling.

4. Sealant is to be installed in strict conformance with manufacturer's requirements.

5. Sealant shall be smoothed to at or slightly below floor grade to create a complete seal to each edge of the joint and allow for future floor carpeting/tile.

6. Do not expose sealant to detergent or soaps, alcohol and solvent cleaners, oil and rubber based paints, or other silicone sealants.

7. Keep sealed joints free of dirt, debris, and traffic until caulk cures.

8. Maintain adequate ventilation during and after working times.

9. Subcontractor to provide all necessary safety equipment, including but not limited to: safety glasses, respirators, chemical resistant gloves, and ventilation fans.

3.06 ELECTRICAL CONDUIT, WIRE, AND COMPONENTS

A. Electrical work and materials shall follow the specifications, layout, and directions provided within this document. Any deviations require prior Engineer approval.

B. Provide all necessary external thermostats, appurtenances, junction boxes, wiring and miscellaneous materials for complete connection of electrical components. The Subcontractor shall be responsible for completing the systems in accordance with the intent of the Drawings. Subcontractor shall be responsible for furnishing and installing all incidental items not actually shown or specified, but which are required by good trade practice to provide complete, functioning systems.

C. Provide all wiring and connections to all equipment requiring electrical power. This responsibility applies to all equipment supplied by the

Subcontractor, as well as all equipment supplied under this and other sections of these specifications, and/or by Engineer.

D. All materials and equipment, for which an Underwriters Laboratory (UL), American National Standards Institute (ANSI), or a National Electrical Manufacturers Association (NEMA) Standard is established, shall be so approved, and will be labeled or stamped as such.

E. Adhesives are not an acceptable technique for mounting, supporting or assembling any electrical components or assemblies, unless noted otherwise herein.

F. Coordinate electrical systems, equipment, and materials installation with other system components.

1. Verify all dimensions by field measurements.

2. Install systems, materials, and equipment level and plumb, parallel and perpendicular to other treatment systems and components.

3. Install electrical equipment to facilitate servicing, maintenance, and repair or replacement of equipment components. As much as practical, connect equipment for ease of disconnecting, with minimum of interference with other installations.

4. Install systems, materials, and equipment giving right-of-way priority to systems required to be installed at a specified slope.

G. Equipment Operation: Subcontractor shall be responsible for: (1) proper motor rotation, (2) observing that lubrication has been properly performed, (3) that motors operate within nameplate limits, and (4) adjustment of circuit breaker and motor controller trip settings.

1. Electrical Testing and Startup

a. All failures under tests due to defective material or poor workmanship shall be corrected by the Subcontractor, at no expense to Engineer.

b. The Subcontractor shall not, under any circumstances, energize any electrical equipment covered by these Specifications, without first obtaining the permission of Engineer.

c. All power and replacement fuses, bulbs, and spare parts necessary for testing shall be furnished and paid for under this item. All spare parts and fuses shall be obtained prior to startup.

H. Conduit

1. Conduit shall be installed as a complete continuous system, and shall be mechanically and electrically connected to all boxes and fittings. The boxes and fittings shall be connected so that adequate electrical continuity is maintained from one conduit to another.

2. A conduit fitting shall be an accessory such as a locknut, bushing, watertight conduit hub, or other part of the conduit system which is intended primarily to perform mechanical rather than an electrical function.

3. All manufactured elbows shall be of a standard radius.

4. General Installation

   a. Damaged or Malformed Conduit- Damaged or malformed conduit shall not be used.

   b. Exposed conduit shall be installed parallel with or at right angles to the Facility or structure walls.

   c. The entire conduit system shall be securely fastened in place. Conduit shall be firmly fastened within three feet of each outlet box, junction box, cabinet, or fitting.

   d. Application for Flexible Conduit:

      i. Where movement or other extenuating circumstances require a length greater than 12 inches, such length shall be specified on the drawings. Flexible metallic conduit shall be maximum length of 24 inches.

      ii. Flexible conduit shall not support the weight of the attached device, shall be installed so that liquids will tend to run off the surface instead of draining toward the fittings, and shall be spaced at least one (1) inch from any moving parts under all conditions of operation.

I. Grounding: Electrically ground metallic cabinets, boxes, and enclosures. All wiring shall include a grounding conductor. Provide a grounding terminal in the interior of each cabinet, box, or enclosure.

J. Test Period: Each piece of equipment procured and installed by the Subcontractor shall continue to meet performance specifications throughout the first year of actual operation (or longer if warranty offered by manufacturer exceeds one year), beginning with the date of

acceptance of completed Work. The Subcontractor shall replace or repair any defect due to faulty workmanship or material which shall develop within 1 calendar year from date of acceptance. This warrantee shall cover both material and workmanship.

END OF SECTION

ERM has over 160 offices across the following countries and territories worldwide

Argentina
Australia
Belgium
Brazil
Canada
Chile
China
Colombia
France
Germany
Hong Kong
India
Indonesia
Ireland
Italy
Japan
Kazakhstan
Kenya
Malaysia
Mexico
Mozambique
Myanmar
The Netherlands
New Zealand
Norway
Panama
Peru
Poland
Portugal
Puerto Rico
Romania
Russia
Singapore
South Africa
South Korea
Spain
Sweden
Switzerland
Taiwan
Thailand
UAE
UK
US
Vietnam

ERM's Milwaukee Office
700 W. Virginia, Ste. 601
Milwaukee, WI 53204

T: 1..414.289.9505
F: 1.414.289.9552

www.erm.com

The business of sustainability

ERM