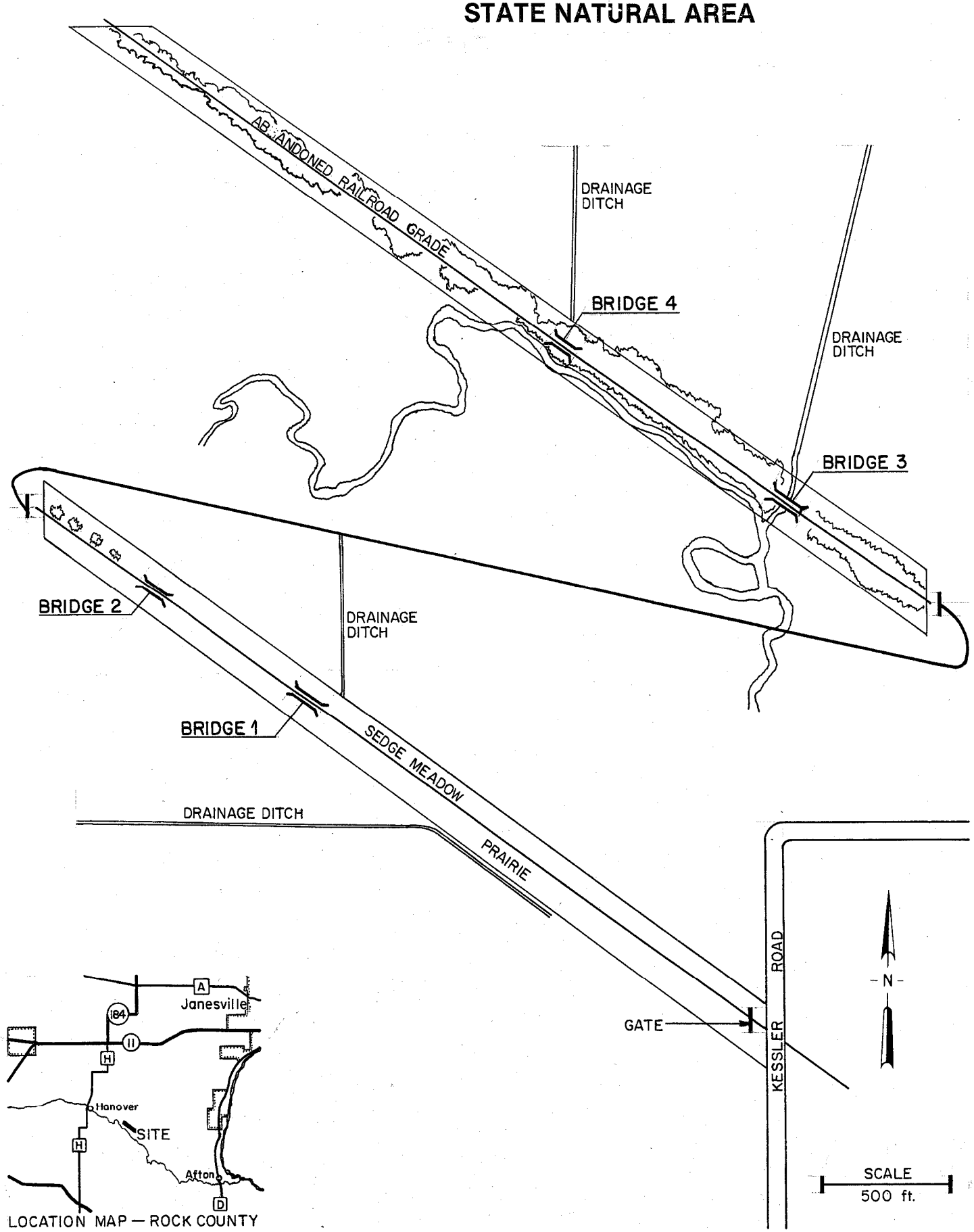KESSLER RAILROAD PRAIRIE
STATE NATURAL AREA