RESOURCE ENGINEERING ASSOCIATES, INC.
3510 Parmenter Street
Suite 100
Middleton, WI 53562
Phone: 608-831-5522
Fax: 608-831-6564
Web: www.reaeng.com

March 14, 2014

Gretchen Wheat
Wisconsin Dept. of Natural Resources
PO Box 7921
Madison, WI 53707-7921

RE: Golden Sands Dairy
Revised CAFO Plans and Specifications
DNR File Reference: R-2012-0081

Dear Ms. Wheat,

In response to DNR's letter dated October 18, 2012 Golden Sands Dairy has revised the plans, specifications, and design report for Golden Sands Dairy for your review. The plans, specifications, and design report were revised based on your review comments, collection of additional information, and to comply with updates that occurred in September 2013 and before, to the Natural Resource Conservations Service (NRCS) Conservation Practice Standards.

We have summarized DNR's comments, with our responses *in italics* below each bulleted item. Revised copies of the plans, design report and CAFO checklist are enclosed.

Separation to Saturation

- Provide a revised site assessment discussion of the saturation level, including explanation of how all the groundwater data was used.

  The site assessment section, section 5, of the design report was expanded to include further explanation of data used and how the data correlates to the soil boring saturation data.

- Logs of nearby wells and well logs were submitted however we can't determine whether it was part of the analysis.

  The site assessment includes explanation of how well logs correlate to the soil boring saturation data. Also a Well Log Map (location of WGNHS, well construction reports) is included in Appendix B with the WGNHS driller well construction reports to summarize the information.

- Consideration of groundwater level monitoring from USGS Site 441829090075301

  This site appears to be in similar hydrology, but is located approximately 15 miles west of the proposed site and across the Wisconsin River so inferring information from a site that is across a groundwater discharge point and different watershed is believed to be of limited value for use at

the dairy site. However, reviewing the water fluctuation in the USGS data, May 2012 and May 2013, the water levels would appear to be average, with high periods being about 1 to 1.5 feet higher which would be within ground water separation requirements for the site.

- Consideration of groundwater level monitoring from Agri Alliance spill site located near Central Sands Dairy.

  This site again appears to be in similar hydrology, but is located approximately 8 miles west of the proposed site and across the Wisconsin River. Inferring information from a site that is across a groundwater discharge point and in a different watershed is believed to be of limited value for use at the dairy site.

- Consideration of groundwater level monitoring from Agri Alliance spill site located near Central Sands Dairy.

  This data is believed to be of limited value for use at the Dairy site as discussed above.

  The groundwater study by S.S. Papadopolus & Associates, Inc. was considered and explanation of data used and how the data correlates to the soil boring saturation data is explained in the site assessment. The modeled Base Conditions map is included in Appendix B. We believe the data is consistent with the data previously submitted and represents the most comprehensive investigation.

- DNR considers a reasonable high saturation elevation may be approximately 985.

  Based on the soil borings, the well logs, the Water Table Elevation map and the site area groundwater study by S.S. Papadopolus & Associates, Inc., we believe the watertable elevations in the soil borings are representative of site groundwater elevations. However, as a very conservative high watertable estimate, we have used elevation 985.0 for design.

- The submittal did not include how long the borings were left open to allow the groundwater to stabilize.

  The borings were left open a short period of time before groundwater measurements were taken. Since the borings were terminated in sandy soils without confining layers, the soil boring would be expected to respond immediately to saturated water levels.

- The submittal did not include how groundwater level information was used, along with observed saturation levels, to identify the high saturation elevation for the site, considering year to year fluctuations.

  The site assessment section of the design report was expanded to include additional explanation of data used and how the data correlates to the soil boring saturation data.

- The submittal did not include high saturation elevations for the site.

  The high saturation elevation was determined by utilizing the boring data pertinent to the structures. A soil boring and structure summary is included in Appendix B for the Waste Storages, which summarizes the soil boring data and saturation separation provided for the waste storage facilities. The site is large and groundwater elevations vary. Two feet of extra groundwater clearance was included in the earlier groundwater separation for design of the structures, and the water levels were planned to be confirmed when construction excavation was performed. Use of elevation 985.0 as the water table is believed to be a conservative estimate.

Waste Storage Impoundment Design

- Floor elevations must be expected to achieve separation from saturation over time.

  The waste storage floor elevation was raised to 989.0, based on DNR's estimate of high saturation. We believe this is a very conservatively high groundwater level for design use.

- Liner design that provides greater groundwater protection is required.

  The waste storage liner was revised to a 6 inch concrete liner with waterstop with a secondary 8 inch clay liner (P200≥50% and PI≥12). Laboratory data for a potential clay soil liner material is presented in Appendix B.

  The department's letter asserts that "If a soil liner component is added to the proposed watertight concrete design, the NRCS 313 (12/2005) minimum specified separation from saturation increases to 3 or 4 feet (depending on the soil liner quality and thickness selected)." As WDNR indicated would be acceptable, GSD has redesigned the waste storage facilities to comply with NRCS 313 (6/2013). In accordance with NRCS 313 Table 5 (6/2013), a water-tight concrete liner requires only a 2 foot separation distance to groundwater. By contrast, a non-water-tight concrete and soil composite liner may require a 3 to 4 foot separation distance, depending on the soil quality and thickness selected. The addition of a soil liner beneath a water-tight concrete liner does not render the liner *more susceptible* to leakage, rather as noted in the department's letter, the addition of a soil liner to the water-tight concrete makes the liner *more protective of groundwater*. The applicable separation distance in NRCS 313 is the one required for water-tight concrete – 2 feet. The incorporation into the facility design of an additional soil liner requested by the department does not render the concrete non-water-tight, rather it is additive to the water-tight design and therefore subject to the 2 foot separation distance.

  As a further protective measure, the waste storage liner is designed with a 4- foot separation distance from the overly-conservative high water table estimate of 985.0 ft.

- Redundant waste storages are required, meaning at least two waste storage facilities of significant volume as compared to the estimated waste generation rates.

The plans were revised to include three waste storage facilities; two 6.6 million gallon storages and one 26.9 million gallon storage.

Liquid Tight Concrete Joint Details

- A joint plan that clearly shows the location of all joints, and labeling to indicate all joints will have embedded waterstop. Use of embedded waterstop consistent with Wisconsin Construction Specification 4-Concrete.

  Structural drawings were revised to include joint locations and details. The Construction Quality Assurance Plan was revised and is now a separate document. The document includes Wisconsin Construction Specification 4-Concrete (5/13).

- Specify waterstop for all corners, intersections and transitions will be fabricated by the manufacturer, or a manufacturer-certified contractor in a controlled environment and with proper manufacturer's equipment. Only straight butt joints spliced waterstop may be field fabricated. This is consistent with Wisconsin Construction Specification 4-Concrete *(5/13).*

  The Construction Quality Assurance Plan was revised and is now a separate document. The document includes Wisconsin Construction Specification 4-Concrete (5/13) which specifies the requested waterstop requirements.

- A revised cross-section detail drawing of embedded waterstop joints showing a maximum of 1:10 slope (vertical to horizontal) in the change of concrete thickness. The use of a maximum of 1:10 slope in concrete thickness is consistent with NRCS 313 (9/2012).

  Structural details were revised to show a maximum of 1:10 slope in the change of concrete thickness as specified in the NRCS 313 (9/12) Conservation.

- Revised reinforcing steel specifications for improved temperature and shrinkage control. Revision to be consistent with Table A of NRCS 313 (9/2012).

  Structural details were revised to meet Table A of NRCS 313 (9/12).

Feed Leachate and Runoff Control System

- Identify the size of each pump and pump control method and on/off settings

  Pump details were revised and added to included pump size and settings. Additional pumps details were added to drawings for pumps at other locations.

- Provide calculations to demonstrate pump size and control settings are appropriate to ensure leachate and first flush runoff amount will be collected.

HydroCAD model included in Appendix D demonstrates leachate and runoff can be collected in the feed storage runoff basin and pumped to storage.

Catastrophic Mortality Disposal

- On-site Catastrophic Mortality Disposal reconsideration.

  Revised Environmental Incidence Response Plan to contact State Veterinarian and DNR to discuss proper catastrophic mortality procedures if such an event were to occur.

Other

The following additional environmentally protective plan revisions were included in the redesign to meet or exceed the NRCS 313 design requirements.

- *Feed leachate and runoff collection system was redesigned to collect leachate and 100% of runoff up to a 100yr24hr storm.*
- *The storage facilities were designed to increase the days of storage to approximately 270 days. This design provides additional flexibility and redundancy of manure storage.*
- *Plans and details for manure treatment building tanks are included.*
- *A separate O&M Plan is included aside from the Design Report.*
- *Additional soil borings were conducted to accommodate the additional waste storages to respond to DNR's comment on redundant storage.*

If you need other clarifications, please contact me at 608-831-5522 x13.

Sincerely,

Robert Pofahl, P.E.
President

Enc.

Cc James E. Wysocki, Golden Sands Dairy, LLC
Anna J. Wildeman, Michael Best & Friedrich
Shane Wucherpfennig, Wood County LCD

Golden Sands Dairy, LLC

ENVIRONMENTAL INCIDENT RESPONSE PLAN

TABLE OF CONTENTS

			Page
EMERGENCY ACTION PLAN SUMMARY			2
1.0	PERSONAL INJURY / FIRE EMERGENCY		3
	A.	CONTACT PHONE INFORMATION	3
	B.	DIRECTIONS TO FARM FROM NEAREST EMERGENCY SERVICES PROVIDER	3
	C.	EMERGENCY INFORMATION	3
	D.	EMERGENCY ACTIONS	3
2.0	MANURE STORAGE OVERFLOW		4
	A.	CONTACT PHONE INFORMATION	4
	B.	EMERGENCY INFORMATION	4
	C.	EMERGENCY ACTION	4
3.0	ACCIDENTAL ENTRY TO MANURE STORAGE AND TRANSFER FACILITIES		5
	A.	CONTACT PHONE INFORMATION	5
	B.	EMERGENCY INFORMATION	5
	C.	EMERGENCY ACTIONS	5
4.0	MANURE STORAGE FAILURE		6
	A.	CONTACT PHONE INFORMATION	6
	B.	EMERGENCY INFORMATION	6
	C.	EMERGENCY ACTIONS	6
5.0	MANURE SPILL DURING TRANSPORT OR LAND APPLICATION		7
	A.	CONTACT PHONE INFORMATION	7
	B.	EMERGENCY INFORMATION	7
	C.	MANURE SPILL ACTIONS	7
	D.	TRANSPORT ACTIONS	7
	E.	MANURE SPILL DURING FIELD APPLICATION WITH A MANURE TANKER ACTIONS	8
	F.	MANURE SPILL DURING APPLICATION WITH A DRAG HOSE ACTIONS	8
	G.	MANURE MOVEMENT OFF SITE DURING OR AFTER APPLICATION	8
6.0	HAZARDOUS MATERIAL SPILL		9
	A.	CONTACT PHONE INFORMATION	9
	B.	SPILL INFORMATION	9
	C.	EMERGENCY ACTIONS	9
7.0	CATASTROPHIC MORTALITY DISPOSAL		10
	A.	CONTACT PHONE INFORMATION	10
	B.	EMERGENCY INFORMATION	10
	C.	MORTALITY DISPOSAL ACTIONS	10
	EMERGENCY ACCIDENT PLAN INCIDENT WORKSHEET		11

EMERGENCY ACTION PLAN SUMMARY

Farm Name:	Golden Sands Dairy, LLC
Owner/Operators:	James E. Wysocki
Farm Address:	Hwy 13, Wisconsin Rapids, WI
Legal Description:	Town of Saratoga, T21NR6E, SW ¼ of SE ¼ SEC 20
Directions to Farm from Nearest Emergency Services provider: (Nekoosa Fire Department)	Start going EAST on Hwy 73 turn SOUTH on HWY 13 to Tower Ave, turn right onto driveway.
Wisconsin Rapids Fire Department	Start going SOUTH on HWY 13 to Tower road, turn right onto driveway

Primary Farm Contacts and Telephone Numbers:

Farm Emergency Coordinator	James Wysocki	Telephone:	(715) 498-5881
	Jeff Sommers	Telephone:	(715) 498-1063

CNMP Emergency Responder	***Name***	***Telephone***
Fire/Rescue	Wisconsin Rapids Fire Department	911 (715) 421-6292, non-emergency
County Sheriff	Wood County Sheriff's Department	911 (715) 421-8700, non-emergency
(Police Department)	Wisconsin Rapids Police Department	911 (715) 423-4444, non-emergency
Veterinarian		
Manure Hauler (Alternate Manure Hauler)	Wysocki Produce Farm, Inc	(715) 366-7175
On-Farm Equipment Operator (skid loader, manure pump)	Ken Kranig	(715) 340-4232
Excavation Contractor	Earth	(715) 652-2522
DNR Hazardous Spill Line		(800) 943-0003
Wood County Emergency Management		(608) 847-9393
Mortality Disposal Contractor	Antigo Rendering	(715) 623-5205

1.0 PERSONAL INJURY/FIRE EMERGENCY

A. CONTACT PHONE INFORMATION

Emergency Fire/ Rescue:	911
Farm Emergency Coordinator:	Jeff Sommers Phone: (715) 498-1663
Farm address / 911 coordinates:	Hwy 13, Wisconsin Rapids
Location of nearest emergency services provider:	Wisconsin Rapids Fire Department Phone: 911

B. DIRECTIONS TO FARM FROM NEAREST EMERGENCY SERVICES PROVIDER

Start going SOUTH on Hwy 13 to Tower Road. Turn RIGHT onto driveway.

C. EMERGENCY INFORMATION

Location of first aid equipment:	Office / Milk parlor
Location of fire suppression equipment:	Office / Trucks
Location of hazardous / flammable materials on farm: (fuels, lubricants, bulk cleaning agents, etc.)	AST fuel tank storage

D. EMERGENCY ACTIONS

1. Determine nature of emergency and type of assistance required.
2. Call 911.
3. Attempt to stabilize injured person without moving unless necessary and safe to do so.
4. Implement CPR, if required.
5. Implement evacuation of people and livestock if appropriate.
6. Identify potential locations of hazardous or flammable materials and notify emergency personnel when they arrive.

2.0 MANURE STORAGE OVERFLOW

A. CONTACT PHONE INFORMATION

Farm Emergency Coordinator	Jeff Sommers	Phone:	(715) 498-1063
Custom manure hauler:	Wysocki Produce Farms	Phone	(715) 366-7175
Custom manure hauler equipment needed:	Pumps, tankers, loaders.		
On-Farm front-end loader operator:	Ken Kranig	Phone	(715) 498-1063
Excavation contractor:	Earth	Phone	(715) 652-2522
Alternate excavation contractor:	Fahrner	Phone	(715) 341-8902
Excavation equipment needed:	Backhoe, front-end loader, pump		
DNR spill hotline: Spill reporting is mandatory by state law.		Phone	1-800-943-0003.

B. EMERGENCY INFORMATION

Location of emergency fill source on farm:	Nearest soil source
Planned location of temporary manure containment dikes:	As required to contain manure

C. EMERGENCY ACTIONS

1. Call farm Emergency Coordinator.
2. Stop the flow.
3. Assess the situation and make appropriate calls.
4. Notify DNR spill hotline: 1-800-943-0003.
5. Begin clean up.
6. If required, call custom manure hauler to bring agitation pump and tanker.
7. Call front-end loader operator and backhoe, if required.
8. Construct a temporary dike below the manure storage from earth fill, corn silage or other available materials if manure is flowing toward a defined waterway or drainage outlet.
9. Use dirt fill or corn silage to add temporary fill to the top of the manure storage berm to stop the manure overflow if the overflow is occurring from a defined location.
10. Place agitation pump in pit at designated pumping location and begin loading tankers.
11. Land apply manure on fields approved for manure application in the nutrient management plan at rates established by the nutrient management plan.
12. Collect manure and contaminated soil from overflow area and from behind temporary dike. Land apply materials on fields approved for manure application at rates established in the nutrient management plan. Remove temporary dike in the field and temporary fill from the top of the manure storage berm.
13. Notify DNR permit contact of manure storage overflow.
14. Document actions taken.

3.0 ACCIDENTAL ENTRY TO MANURE STORAGE AND TRANSFER FACILITIES

A. CONTACT PHONE INFORMATION

Fire / Rescue:	911
Farm Emergency Coordinator:	Jeff Sommers Phone: (715) 498-1063

B. EMERGENCY INFORMATION

Type and location of Rescue Equipment: (pole, ladder, flotation device, rope)	Office
Location of first aid equipment:	Office

C. EMERGENCY ACTIONS

1. Call for help.
2. Shut off manure transfer pump and agitator.
3. Locate emergency rescue equipment (grab pole, ladder, and flotation device) and attempt to reach victim. Do not enter a confined area where manure gases could accumulate without an appropriate respirator.
4. Attempt to reach victim with emergency rescue equipment (ladder, rope).
5. Initiate CPR, if necessary.
6. Call 911.

4.0 MANURE STORAGE FAILURE

A. CONTACT PHONE INFORMATION

Farm Emergency Coordinator:	Jeff Sommers	Phone: (715) 498-1063
Excavation equipment needed:	Backhoe, front-end loader, pump	
Custom manure hauler:	Wysocki Produce Farms	Phone: (715) 366-7175
Custom manure hauler equipment needed:	Pumps, tankers, loaders.	
DNR spill hotline: Spill reporting is mandatory by state law		Phone 1-800-943-0003.

B. EMERGENCY INFORMATION

Front end loader location on the farm: Bunker silos

Location of emergency fill source on the farm: Nearest soil source needed

Planned location of temporary manure containment dikes: As required to contain manure

C. EMERGENCY ACTIONS

1. Call farm Emergency Coordinator.
2. Stop the flow.
3. Assess the situation and make appropriate phone calls.
4. Notify DNR spill hotline: 1-800-943-0003
5. Begin cleanup.
6. Call front end loader and operator and excavator if needed.
7. Construct temporary dike of fill, corn silage or other available materials below manure storage to prevent manure from reaching any defined waterway or drainage outlet.
8. Attempt to place temporary fill in the area of dike failure.
9. Place agitation pump in the pit at designated pumping site as soon as possible and begin loading tankers.
10. Land apply manure on fields approved for manure application in the nutrient management plan at rates established by the nutrient management plan.
11. Collect manure and contaminated soil from the overflow area behind the temporary dike. Land apply these materials to field approved for manure application in the nutrient management plan at rates established in the nutrient management plan. Remove temporary dike and temporary fill from the manure storage berm.
12. Conduct engineering analysis of the manure storage failure and develop repair plan.
13. Obtain necessary approvals for manure storage repair plan.
14. Repair manure storage.
15. Document your actions.

5.0 MANURE SPILL DURING TRANSPORT OR LAND APPLICATION

A. CONTACT PHONE INFORMATION

Farm Emergency Coordinator:	Jeff Sommers	Phone: (715) 498-1063
Custom manure hauler:	N/A	
DNR spill hotline: Spill reporting is mandatory by state law		Phone: 1-800-943-0003
Front end loader operator:	N/A	
Sheriff's department, non-emergency:	Wood County Sheriff	Phone: (715) 421-8700
Fire department, non-emergency:	WI Rapids Fire Department	Phone: (715) 421-6278

B. EMERGENCY INFORMATION

Identify location of spill:	_____
Clean up equipment needed:	Skid loader/front end loader, corn silage/bedding or water tanker, manure spreader.

C. MANURE SPILL ACTIONS

1. Turn off all pumps.
2. Stop the flow.
3. Assess situation – Make appropriate calls.
4. Notify DNR spill hotline: 1-800-943-0003
5. Begin cleanup
6. Document your actions.

D. TRANSPORT ACTIONS

1. Park tanker out of traffic if possible, and move away from ditches and surface waters.
2. Assess needs and call for help including sheriff's department if traffic control is needed.
3. Attempt to stop leak if possible.
4. Construct temporary berm to prevent manure from leaving the spill site if necessary.
5. Transfer manure remaining in tanker to another tanker.
6. Clean up spilled manure and contaminated soil. Land apply manure and contaminated soil to fields approved for manure application at rates established in the nutrient management plan.
7. Contact fire department to wash remaining manure off of road surface if a safety hazard remains. Make sure runoff will not discharge directly to surface water. If washing manure off road is not feasible, use corn stalks / silage to absorb remaining manure, collect with loader / skid steer and land apply.
8. Notify DNR permit contact of manure spill during transport.

E. MANURE SPILL DURING FIELD APPLICATION WITH A MANURE TANKER ACTIONS

1. Shut off application pump and stop equipment. Move equipment away from ditches or surface waters.

2. Assess needs and call for help.

3. Attempt to stop leak.

4. Construct a temporary berm with fill to contain spilled manure if necessary.

5. Transfer remaining manure to another tanker.

6. Clean up spilled manure and contaminated soil. Land apply on fields approved for manure application at rates established in the nutrient management plan.

F. MANURE SPILL DURING APPLICATION WITH A DRAG HOSE ACTIONS

1. Clamp hose or park tractor tire on the hose and turn off all valves.

2. Assess needs and call for help.

3. Attempt to stop leak.

4. Construct a temporary berm to prevent runoff of manure if necessary.

5. Clean up manure and contaminated soil. Land apply to fields approved for manure application at rates established in the nutrient management plan.

G. MANURE MOVEMENT OFF SITE DURING OR AFTER APPLICATION

1. Stop land applying manure.

2. If possible, incorporate manure with tillage or till ground down slope of applied manure to reduce runoff.

3. Construct a temporary berm to prevent runoff of manure if necessary.

4. Assess needs and call for help.

6.0 HAZARDOUS MATERIAL SPILL

A. CONTACT PHONE INFORMATION

Fire / rescue / hazardous material response:	911	
Farm Emergency Coordinator:	Jeff Sommers	Phone: (715) 498-1063
DNR spill hotline: Spill reporting is mandatory by state law.		Phone: 1-800-943-0003

B. SPILL INFORMATION

Location of farm first aid equipment:	Office
Location of fire suppression equipment:	Office/ Trucks
Location of personal protection equipment:	Shop
Location of hazardous / flammable materials:	AST's
Location of spill containment materials:	Shop
Location of power shut off switches near stored hazardous materials:	N/A

C. EMERGENCY ACTIONS

1. Identify hazardous material that has been spilled.
2. Turn off all pumps.
3. Stop the flow.
4. Assess the situation and make appropriate calls.
5. Notify the DNR by calling the spills hotline: 1-800-943-0003
6. Flammable materials: Shut off power to area from a remote location and eliminate sources of ignition such as open flame without entering area where flammable materials have concentrated.
7. Evacuate people and livestock from area as appropriate.
8. Begin cleanup.
9. Prevent hazardous material from leaving spill site by constructing temporary dikes if necessary.
10. Once the situation has been stabilized collect hazardous material using approved methods and dispose of contaminated soil according to regulations.
11. Document your actions.

7.0 CATASTROPHIC MORTALITY DISPOSAL

A. CONTACT PHONE INFORMATION

Farm Emergency Coordinator:	Jeff Sommers Phone: (715) 498-1063
Mortality Disposal Contractor:	Granite Stock Removal, W4391 Cumberland Rd, Redgranite, WI, 54970 (phone 920-566-2563) O.J. Krull & Sons, W5188 Rock Road, Black Creek, WI 54106 (phone 800-637-6310)
Veterinarian:	Phone: Will be provided when a veterinarian is selected for the GSD herd.
Excavation Contractor:	Earth Phone: (715) 652-2522
Excavation equipment needed:	Bulldozer, highhoe, and dump truck

B. EMERGENCY INFORMATION

Location of mortality storage area:	on site
Location of catastrophic mortality burial area:	off site location, to be determined with WDNR and State Veterinarian

C. MORTALITY DISPOSAL ACTIONS

1. Contact veterinarian if death is suspicious or animal displayed unusual symptoms.

2. Remove mortality from the livestock production area and place in area designated for mortality storage.

3. Contact mortality disposal contractor to arrange pick up within 24 hours in the summer and 48 hours in the winter.

4. If disease outbreak requires it, implement procedures as directed by State Veterinarian. This may include killing exposed animals, burning their carcasses, and burial of their ashes in the catastrophic mortality burial area.

EMERGENCY ACCIDENT PLAN INCIDENT WORKSHEET

Incident Date/Time:

Location:

People/ Agencies Involved:

Type of Incident:

Outcome:

Worksheet Completed By: _____ _____

Name (Print) Signature

Date Completed: _____

CONSTRUCTION QUAILITY ASSURANCE PLAN

GOLDEN SANDS DAIRY
FACILITY DEVELOPMENT PLAN

January 2014

PREPARED FOR:

Jim Wysocki
P.O. Box 330
Bancroft, WI 54921

PREPARED BY:

Resource Engineering Associates, Inc.
3510 Parmenter St., Suite 100
Middleton, Wisconsin, 53562

Table of Contents

1. Project Contacts 3
2. Purpose 4
3. Responsibilities of Parties 4
4. Qualifications for Construction Observer 5
5. Documentation 5
6. Pre-Construction Meeting 6
7. Observation & Construction Verification 7
8. NRCS Wisconsin Construction Specifications 10

Appendix A - Forms
Appendix B - NRCS Wisconsin Construction Specifications

1. Project Contacts

Owner Contact

Jim Wysocki - Operator
P.O. Box 330
Bancroft, WI 54921
Phone: (715) 335-8060
Fax: (715) 335-8061
Email: jim.wysocki@rpespud.com

DNR Regional Contact

Robert Rohland
910 Highway 54 E
Black River Falls WI, 54615
Phone: (715) 284-1429
robert.rohland@wisconsin.gov

DNR CAFO Permit #:

County Animal Waste Contact

Shane Wucherpfennig
Engineering Technician– Wood County LCD
400 Market St
Wisconsin Rapids, WI 54495
Phone: (715) 421-8475

Resource Engineering Associates, Inc. Contacts

Robert Pofahl, PE
3510 Parmenter Street, Suite 100
Middleton, WI 53562
Phone: 608-831-5522 x13
Fax: 608-831-6564
Email: bob@reaeng.com

Site Location

Wood County, Wisconsin
Town of Saratoga (T 21N, R 6E)
SW1/4 of SE1/4, SE1/4 of SW1/4, and eastern half of SW1/4 of SW1/4 of Section 20

2. Purpose

The purpose of providing this report is to identify specific construction features which should be documented to support conformance to the plans and specifications.

The Contractor is responsible for means and methods to accomplish construction in accordance with the plans and specifications. Construction observation by the engineer is not intended to be an exhaustive check or a detail inspection of the Contractor's work but rather to allow the engineer to become generally familiar with the work in progress and to determine, in general, if the work is proceeding in accordance with the engineering plans.

Once construction is complete, record drawings will be submitted, by a Professional Engineer, to document installation in accordance with the plans and applicable standards.

3. Responsibilities of Parties

The purpose of this section is to identify key parties, their responsibilities and authorities for the project.

Owner

The Owner is responsible for selecting and authorizing the Contractor of choice to install the structures of the proposed plan. The owner is responsible for awarding the project, coordinating project communication, scheduling and work for the project. Resolution of construction quality assurance issues will be brought to the attention of the Owner. The Owner will be responsible for requiring the Contractor to install the structures in accordance with the approved plans and specifications or provide on alternative plan for regulatory approval. Contractors are responsible to the Owner.

Construction Contractor

The Contractor(s) are to install structures as per the approved plans and specifications. A Contractor may hire a sub contractor to complete the work with Owner's permission, but is responsible for their workmanship and compliance with the approved plans and specifications. No changes to the plans and specifications will be made or accepted unless submitted in writing and approved by the Engineer.

Engineer

The Engineer is responsible for the project design and specifications. If modifications to the project are needed the Engineer will discuss with the Owner to determine a resolution. If the project is not constructed in accordance with the approved plans and specifications, regulatory approval for changes shall be obtained by the Owner or Contractor.

Construction Observation Personnel

Construction observation will be performed by REA personnel under the direction of the project's Engineer and direction from the Owner. Construction Observation Personnel are responsible to document generally how construction is proceeding in comparison to the approved plans and specifications. Items proposed to be observed are detailed in the Observation and Verification section.

Observation Personnel will notify the Owner of deficiencies that are observed. The Contractor must correct these deficiencies to the satisfaction of the Observation Personnel, Engineer, and Owner for the construction to be certified by the Engineer upon project completion.

Testing Firm

The Testing Firm is responsible for providing soil, concrete, and liner material testing as required by the plans and specifications. The Testing Firm will be retained by the Owner or Construction Contractor based on the awarding of the project. The Testing Firm will be an independent entity not associated with the Owner, Engineer, or Construction Contractor. Test results will be supplied to the Owner and Engineer for review. Deficiencies shall be discussed between the Engineer and Owner and a resolution brought to the Contractor.

4. Qualifications for Construction Observer

Construction Observation Personnel are planned to be under the supervision of Robert Pofahl, PE.

Construction Observation Personnel should obtain readily available construction material manufacturers tags, take photographs of materials listed, and collect data from contractors.

The purpose of providing documentation of these materials is to show if the facility was installed according to the approved plan design and specifications.

REA staff expected to be assigned for construction documentation activities at project are:

- Robert Pofahl, P.E.
- Lee Elver
- Darrin Sherstad, P.E.
- Dan Wierzba

5. Documentation

Construction Observation Personnel should obtain readily available construction material manufacturers tags, take photographs of materials listed, and collect data from Contractors or Testing Firms.

The purpose of providing documentation of these materials is to show the project was installed according to the approved plan and specifications.

The Construction Observation Personnel will prepare a Field Report summarizing observations made during each site visit. The Field Report should contain the following information:

- Project name, date, weather conditions, and time on site.
- Work trades on site and work being completed.
- Items observed and apparent deficiencies.
- Summary of communications with Owner, Contractor or Testing Firm.

A Field Report form is presented in Appendix A.

Once construction is complete and construction is believed to be substantially in compliance with the plans and specifications, a record documentation report and drawings will be submitted, by a Professional Engineer.

6. Pre-Construction Meeting

A meeting shall be scheduled before construction to discuss construction schedules, plan details, construction specifications, and known site limitations. The meeting should include the following:

	Invited	Attended	Not Attended
Owner_____	_____	_____	_____
DNR_____	_____	_____	_____
County LCD_____	_____	_____	_____
Engineer_____	_____	_____	_____
Excavator_____	_____	_____	_____
Concrete Contractor_____	_____	_____	_____
Testing Firm_____	_____	_____	_____
Building Contractor_____	_____	_____	_____
Other_____	_____	_____	_____
Other_____	_____	_____	_____

Items of discussion should include:

- ☐ Roles and responsibilities of parties
- ☐ Construction observation requirements and notification
- ☐ Testing requirements
- ☐ Modifications and alternatives procedures
- ☐ Review plans & specifications
- ☐ Locate and observe benchmark
- ☐ Determine who and how construction staking will take place
- ☐ Project Schedule
- ☐ Coordination of Work
- ☐ Procedure for certification of construction

Other items discussed:

7. Observation & Construction Verification

Items to be observed and documented include the following: (Initial and date individual items as performed).

Grading/Drainage

- ☐ Document post construction surface drainage for conformance to the plan.
- ☐ Document stormwater pipe sizes, dimensions, and elevations for conformance to the plans.

Concrete Waste Storage Facilities

Secondary Liner

- ☐ Document secondary liner material and thickness (P200 and PI) for conformance to the plans.
- ☐ Document testing results for conformance with plans and specifications.

Concrete

- ☐ Document concrete mix meets specifications (contractor to supply at least seven days prior to concrete being placed).
- ☐ Concrete contractor is to provide at least two day notice prior to concrete being place.
- ☐ Concrete to be tested for slump, air, temperature and strength as required by specifications and drawings by Contractor.
- ☐ Batch tickets will be provided for concrete delivered to the site and provide information as required by specifications.
- ☐ Document control joint location and dimensions for conformance with the plans.
- ☐ Document select concrete dimensions of slabs, footings, walls, etc for conformance with the plans.
- ☐ Document concrete placement in accordance with specifications.
- ☐ Document the Contractor is aware of concrete curing in accordance with specifications. Obtain available information from the contractor.
- ☐ Document form removal and backfilling in accordance with plans and specifications.

Reinforcing Steel

- ☐ Document reinforcing steel size, grade, and that reinforcement is free of loose rust, oil, or other debris.
- ☐ Document reinforcing steel placement, spacing, splice lengths and clearances.

Waterstop

- ☐ Document waterstop size, material type, and factory joints.
- ☐ Document waterstop placement, splices and clearances.
- ☐ Document waterstop is secured per manufacturer recommendations (No cold sticking is allowed).
- ☐ Document waterstop is free of concrete, dirt, mud or other debris prior to concrete pouring.
- ☐ Document concrete around waterstop is vibrated.

Fence and Markers

- ☐ Document when fencing is installed.
- ☐ Document when MOL marker is installed.

Waste Transfer

Piping

- ☐ Document on-site manure transfer piping materials, select dimensions, and elevations for conformance to the plans and specifications.
- ☐ Document how the Contractor is preparing, placing, joining or sealing the manure transfer pipe joints and compare the procedure to the specifications.

- ☐ Document how the Contractor is preparing, placing, joining or sealing the manure transfer pipe connection to structures and compare the procedure to the specifications.
- ☐ Document typical pipe bedding, thrust control, cover and insulation if applicable is in accordance with plans and specifications.

Pumps

- ☐ Document pumps are in conformance with the plans or are approved equal by the supplier and design engineer.

Concrete Feed Storage Pad and Separated Solids Pad

Concrete

- ☐ Compare concrete mix with specifications (Contractor to supply at least seven days prior to concrete being placed).
- ☐ Concrete Contractor is to provide at least two day notice prior to concrete being place.
- ☐ Concrete to be tested for slump, air, temperature and strength as required by specifications and drawings by Contractor.
- ☐ Batch tickets to be provided for concrete delivered to the site and provide information as required by specifications.
- ☐ Document control joint location and dimensions for conformance with the plans.
- ☐ Document concrete dimensions of slabs, footings, walls, etc for conformance with the plans.
- ☐ Document concrete placement as compared to the specifications.
- ☐ Document concrete curing as compared to the specifications.
- ☐ Document form removal and backfilling as compared with plans and specifications.

Reinforcing Steel

- ☐ Document reinforcing steel size, grade, and that reinforcement is free of loose rust, oil, or other debris.
- ☐ Document select reinforcing steel placement, spacing, splice lengths and clearances.

Waterstop

- ☐ Document waterstop size, material type, and factory joints.
- ☐ Document waterstop placement, splices and clearances.
- ☐ Document waterstop is secured per manufacturer recommendations (No cold sticking is allowed).
- ☐ Document waterstop is free of concrete, dirt, mud or other debris prior to concrete pouring.
- ☐ Document concrete around waterstop is vibrated.

Concrete Feed Storage Pad Collection Basin

Concrete

- ☐ Document concrete mix meets specifications (contractor to supply at least seven days prior to concrete being placed).
- ☐ Concrete Contractor is to provide at least two days notice prior to concrete being place.
- ☐ Concrete to be tested for slump, air, temperature and strength as required by specifications and drawings by Contractor.
- ☐ Batch tickets to be provided for concrete delivered to the site and provide information as required by specifications.
- ☐ Document control joint location and dimensions for conformance with the plans.
- ☐ Document concrete dimensions of slabs, footings, walls, etc for conformance with the plans.
- ☐ Document concrete placement as compared to the specifications.
- ☐ Document concrete curing as compared to the specifications.
- ☐ Document form removal and backfilling as compared with plans and specifications.

Reinforcing Steel

- ☐ Document reinforcing steel size, grade, and that reinforcement is free of loose rust, oil, or other debris.
- ☐ Document select reinforcing steel placement, spacing, splice lengths and clearances.

Waterstop

- ☐ Document waterstop size, material type, and factory joints.
- ☐ Document waterstop placement, splices and clearances.
- ☐ Document waterstop is secured per manufacturer recommendations (No cold sticking is allowed).
- ☐ Document waterstop is free of concrete, dirt, mud or other debris prior to concrete pouring.
- ☐ Document concrete around waterstop is vibrated.

8. NRCS Wisconsin Construction Specifications

Applicable NRCS Wisconsin Construction Specifications include:

1	Clearing	5/12
2	Excavation	5/12
3	Earthfill	5/12
4	Concrete	5/13
5	Construction Site Pollution Control	5/12
7	Mobilization and Demobilization	5/12
9	Rock Riprap	11/11
10	Fences	11/09
13	Geotextiles	5/10
15	Plastic Pipe Conduits	4/09
24	Construction Surveys	5/12
26	Topsoiling	5/12
204	Earthfill for Waste Storage Facilities	10/12
300	Clay Liner	11/12
634	Waste Transfer Pipes	9/12

Appendix A – Forms

Engineer's Field Report			
Project Name:		**Date:**	
Project #:		**Arrival/Departure:**	
Owner/Client:		**Weather:**	
Present on Site:			

The Following Was Noted:

Items To Be Addressed with Owner or Contractor:

RESOURCE ENGINEERING ASSOCIATES, INC.

Observer Signature:

Distribution: **Date:** **Sheet:** **of:**

Appendix B – NRCS Wisconsin Construction Specifications

WISCONSIN CONSTRUCTION SPECIFICATION

1. Clearing

1. SCOPE

The work shall consist of the clearing and disposal of trees, snags, logs, brush, shrubs, stumps, and rubbish from the designated areas.

2. MARKING

The limits of the areas to be cleared will be marked by means of stakes, flags, tree markings, or other suitable methods. Trees to be left standing and uninjured will be designated by special markings placed on the trunks at a height of about 6 feet above the ground surface.

3. PROTECTION OF EXISTING VEGETATION

Trees and other woody vegetation designated to remain undisturbed shall be protected from damage throughout the entire construction period. Any damage resulting from the Contractor's operations or neglect shall be repaired by the Contractor.

Earthfill, stockpiling of materials, vehicular parking, and excessive foot or vehicular traffic shall not be allowed within the dripline of vegetation designated to remain in place. Vegetation damaged by any of these or similar actions shall be replaced with viable vegetation of the same species.

Any cuts, skins, scrapes, or bruises to the bark of the vegetation shall be carefully trimmed and local nursery accepted procedures used to seal damaged bark.

Any limbs or branches 0.5-inch or larger in diameter that are broken, severed, or otherwise seriously damaged during construction shall be cut off at the base of the damaged limb or branch flush with the adjacent limb or tree trunk.

All roots 1 inch or larger in diameter that are cut, broken, or otherwise severed during construction operations shall have the end smoothly cut perpendicular to the root. Roots exposed during excavation or other operations shall be covered with moist earth and/or backfilled as soon as possible to prevent them from drying.

4. CLEARING

Trees, brush, shrubs, stumps, and other woody growth shall be cleared to a height not exceeding 12 inches above the ground surface. Such growth may be cleared by cutting, pulling, grubbing, or other approved methods.

Trees shall be felled in such a manner as to avoid damage to trees that are to be left standing, existing structures, utilities, and with regard for the safety of persons.

When the designated areas to be cleared include borrow areas and/or areas upon which improvements are to be constructed, the required grubbing of stumps, roots, and other objectionable material in these areas shall be a part of this specification. The grubbing shall consist of the removal of all stumps,

roots of 1 inch in diameter or larger, buried logs, and other objectionable material to a minimum depth of 2 feet below a structure subgrade and 1 foot below an embankment foundation.

5. SITE EROSION CONTROL

Measures shall be installed, or the work performed in a manner that will minimize site erosion, and the production of sediment. Protective measures shall include but are not limited to diversions, waterways, seeding, mulching, sediment basins, and silt fences.

6. DISPOSAL

All materials cleared from the designated areas shall be burned or buried at approved locations or otherwise removed from the site. Buried materials shall be covered with a minimum of 2 feet of earthfill (including any topsoil added for seeding).

The Contractor is responsible for complying with all rules and regulations for disposal at locations away from the construction site or for the burning of cleared materials.

WISCONSIN CONSTRUCTION SPECIFICATION

2. Excavation

1. SCOPE

The work shall consist of the excavation of all materials necessary for the construction of the work.

2. USE OF EXCAVATED MATERIALS

To the extent that they are needed, all suitable materials removed from the specified excavations shall be used in the construction of the required earthfill. The suitability of materials for specific purposes will be determined by the Technician. The Contractor shall not waste or otherwise dispose of suitable excavated materials.

3. DISPOSAL OF WASTE MATERIALS

All surplus or unsuitable excavated materials will be designated as waste and shall be disposed of at the locations shown on the drawings or as approved by the Technician. Waste materials shall not be placed in wetlands.

Material placed in designated waste disposal areas shall be left in a neat and sightly condition and sloped to provide positive drainage. Compaction of the waste materials will not be required unless specified by the construction plans.

Waste material excavated from channels may be deposited in leveled spoilbanks or areas adjacent to the channel work (if permissible). The shape and slopes of the spoilbanks shall be indicated on the drawings or as approved by the Technician. Spoil piles shall be located a minimum of 12 feet from the top of the channel side slope.

Spoil piles or disposal areas shall be protected to minimize site erosion and the production of sediment. Protective measures may include but are not limited to diversions, seeding, mulching, sediment basins, and silt fences.

4. SPECIAL REQUIREMENTS FOR STRUCTURE AND TRENCH EXCAVATION

The required dimensions and side slopes of all structure and trench excavations shall be as shown on the drawings.

Excavation beyond the limits of the specified lines and grades shall be corrected by filling the resulting voids with approved compacted materials.

Excavation for the installation of pipes shall follow the practices contained in the Occupational Safety and Health Administration (OSHA) Subpart P, Excavation, of 29 CFR 1926.650, .651 and .652.

Side slopes shall be excavated or braced to safeguard the work and workers. When bracing or supporting is required, the width of the excavation shall be adjusted to allow for the space occupied by the sheeting, bracing, or other supporting installations. The Contractor shall furnish, place, and subsequently remove such supporting installations.

5. REMOVAL OF WATER

The Contractor shall construct and maintain all necessary cofferdams, channels, flumes, pumping equipment, and/or other temporary diversion and protective work for dewatering the various parts of the work. Foundations, cutoff trenches, and other parts of the work shall be maintained free from water as required for constructing each part of the work. After having served their purpose, all cofferdams and other temporary protective works shall be removed, or leveled to give a sightly appearance and so as not to interfere in any way with the operation, usefulness, or stability of the permanent structure.

6. BORROW EXCAVATION

When the quantities of suitable materials obtained from specified excavations are insufficient to construct the specified fill portions of the permanent works, additional materials shall be obtained from the designated borrow areas.

When shown on the drawings, sediment basins, terraces, diversions, or other measures shall be constructed to protect the borrow areas from erosion and retain sediment within the borrow area.

The upper six (6) inches shall be stripped from all borrow areas. This stripping shall be performed immediately prior to use of the borrow material to reduce the time the area is exposed to erosion. For large borrow areas, only a portion of the area should be stripped at a time. This material shall be redistributed over the area from which it came after borrow excavation is completed.

The extent of excavation and the selection of materials from the borrow area shall be as directed by the Technician. On completion of excavation, all borrow pits shall be left in a neat and sightly condition. All borrow areas shall be graded to blend with existing topography and sloped to prevent ponding and provide positive drainage.

WISCONSIN CONSTRUCTION SPECIFICATION

3. Earthfill

1. SCOPE

The work shall consist of placing the earthfill required by the drawings. This specification does not apply to the earthfill required for waste storage facilities.

2. MATERIALS

All fill materials shall be obtained from required excavations and designated borrow areas. The selection, blending, routing, and disposition of materials in the various fills shall be subject to approval by Technician.

Fill materials shall contain no sod, brush, roots, frozen soil, or other perishable materials. Stones larger than two-thirds of the uncompacted layer thickness shall be removed from the materials prior to compaction of the fill.

3. FOUNDATION PREPARATION

The foundation area shall be cleared of trees, stumps, roots, brush, rubbish, and stones having a maximum dimension greater than six (6) inches. Foundations shall be stripped to remove vegetation and other unsuitable materials or to the depth shown on the drawings, whichever is greater. Topsoil shall be stripped from the foundation area and stockpiled for use as a top dressing for vegetation establishment unless otherwise shown on the drawings.

Earth foundations shall be graded to remove surface irregularities and slopes steeper than 1:1.

The foundation surfaces shall be scarified parallel to the centerline of the fill to a minimum depth of 2 inches. The moisture content of the scarified materials shall be maintained as specified for the earthfill. The surface materials of the foundation shall be compacted and bonded with the first layer of earthfill as specified for subsequent layers of earthfill.

4. PLACEMENT

Fill shall not be placed until the required excavation and preparation of the underlying foundation is completed and inspected and approved by the Technician. No fill shall be placed upon a frozen surface nor shall snow, ice, or frozen material be incorporated in the fill.

Fill shall be placed in approximately horizontal layers beginning at the lowest elevation of the foundation. The thickness of each layer of fill prior to compaction shall be as specified in Table 1. Materials placed by dumping in piles or windrows shall be spread uniformly to not more than the specified layer thickness prior to compaction.

Adjacent to structures, earthfill shall be placed in 4-inch lifts (prior to compaction) in a manner adequate to prevent damage to the structure and to allow the structure to gradually and uniformly assume the backfill loads.

The height of the fill shall be increased at approximately the same rate on all sides of the structure.

Placement of fill adjacent to concrete structures may begin after the concrete has cured for the minimum time specified.

Earthfill in dams, levees, and other structures designed to impound water shall be placed to meet the following additional requirements:

a. The distribution of materials throughout each zone shall be essentially uniform, and the fill shall be free from lenses, pockets, streaks, or layers of material differing substantially in texture, moisture content, or gradation from the surrounding material.

b. The embankment top shall be maintained approximately level during construction except for sectional construction as described in Section 7.

c. Dam embankments shall be constructed in continuous layers from abutment to abutment, except where openings to facilitate construction or to allow passage of stream flow during construction are specified.

d. If the surface of any layer becomes too hard and smooth to achieve a suitable bond with the succeeding layer, it shall be scarified parallel to the axis of the fill to a depth of not less than 2 inches before the next layer is placed.

5. CONTROL OF MOISTURE CONTENT

Fill materials shall have a moisture content sufficient to insure the required compaction. When kneaded in the hand, the soil will form a ball which does not readily separate and will not extrude out of the hand when squeezed tightly. The adequacy of the moisture content will be determined by the Technician.

Fill material or the top surface of the preceding layer of compacted fill that becomes too dry to permit suitable bond shall either be removed or scarified and wetted by sprinkling to an acceptable moisture content prior to placement of the next layer of fill.

Fill material that is too wet when deposited or the top surface of the preceding layer of compacted fill that becomes too wet shall be either removed or allowed to dry to an acceptable moisture content before compaction or placing additional layers of fill.

6. COMPACTION

The Contractor shall furnish and operate the types and kinds of equipment necessary to compact the fill materials.

Unless otherwise specified on the plans or approved by the Technician, compaction requirements for each layer of fill material are as shown in Table 1.

Each pass shall consist of at least one complete coverage by the wheel, track, or roller over the entire surface of the fill layer in a direction parallel to the main axis of the fill.

Adjacent to structures or in confined areas, compaction of the fill shall be accomplished by means of manually directed power tampers or plate vibrators or hand tamping, unless otherwise specified. The Technician shall determine if adequate compaction is being achieved. Heavy equipment shall not be

operated within 2 feet of any structure. Compaction by means of drop weights operating from a crane or hoist of any type will not be permitted.

7. SPECIAL REQUIREMENTS FOR SECTIONAL CONSTRUCTION OF EMBANKMENTS

When sectional (or phase) construction of embankments is authorized, the work shall be accomplished in the following manner:

Each section of the embankment that is constructed in the first phase shall be so placed that a slope not steeper than 3 feet horizontal to 1 foot vertical is maintained at the end of the embankment section adjacent to the gap in construction or closure section.

Prior to placement of the closure sections, the surfaces of completed fills and excavations that will be in contact with the closure shall be stripped of all loose material, scarified, moistened, and recompacted as necessary.

Table 1 - Equipment Compaction Requirements

Equipment Type		Applicable Soils[1]	Maximum Fill Height[2] (feet)	Layer Thickness[3] (inches)	Minimum Passes[4]
Sheepsfoot roller (10,000 lb. min. operating weight)		ML, MH, CL, CH or SM, SC, GM, GC with >20% fines	None	9	1
Vibratory tamping roller (9,000 lb. min. operating weight)		SM, SC, GM, GC	None	9	2
Rubber-tired scraper (fully loaded)		GM, GC, SM, SC, ML, MH, CL, CH	20	9	1
Rubber-tired front end loader (fully loaded)		GM, GC, SM, SC, ML, MH, CL, CH	20	6	1
Track-type crawler (standard tracks)	30,000 lb. min.	GM, GC, SM, SC, ML, CL	10**	6	2
		SP, SW, GP, GW	6**	12	4
		CL, ML, SC, SM	15##	3	2
	less than 30,000 lb.	GM, GC, GP, GW, SM, SC, SP, SW, ML, CL	6**	6	2
Farm tractor (2,400 lb. min.)		GM, GC, SM, SC, ML, MH, CL, CH	15	6	2
Steel drum vibratory roller (10,000 lb. min.)		SP, SW, GP, GW	None**	12	2

[1] Unified Soil Classification System.

[2] Measured from the top of the fill to the lowest point along the centerline of the fill.

[3] Prior to Compaction.

[4] The Technician shall determine if adequate compaction is being achieved. Additional passes may be required.

** The fill shall not have a permanent body of water stored against it.

This method may only be used for embankments that will not have the potential for a permanent body of water stored against it that is greater than 1/4 acre in surface area or more than 6 feet deep.

WISCONSIN CONSTRUCTION SPECIFICATION

4. Concrete

1. SCOPE

The work shall consist of furnishing, forming, placing, *consolidating*, finishing, and curing Portland cement concrete and the furnishing and placing of steel reinforcement or other appurtenances as required on the construction drawings. All materials, test procedures, and admixtures shall meet the requirements of the latest edition of the applicable ASTM designation.

Failure to meet any requirements contained in this specification may be cause for rejection of the concrete or delay of placement.

2. DEFINITIONS

The following definitions are provided for the purpose of this specification. The words that are defined in this section are italicized the first time that they are used in the text.

Batch delivery ticket refers to the form showing the total weights of all the ingredients used to mix the contents of the rotating drum mixer (total weights of all ingredients on the load) and other job-pertinent information.

Consolidating refers to the process of reducing the volume of entrapped air in a fresh cementitious mixture, usually accomplished by inputting mechanical energy.

Construction joints are those joints where two successive placements of concrete meet through which reinforcement is continuous and bond is required between the two pours.

Finishing refers to the process of treating surfaces of fresh or recently placed concrete or mortar to produce desired appearance and service.

Firm refers to the condition of the subgrade where it is not significantly displaced or deformed by foot traffic during construction and is able to properly support reinforcement chairs.

Flatwork refers to concrete slabs poured on slopes flatter than 5:1 (Horizontal:Vertical).

Formed surfaces are those that require a temporary structure or mold for the support of concrete while it is setting and gaining sufficient strength to be self-supporting such as walls or poured-in-place tank lids.

Hand tamping refers to the operation of consolidating freshly placed concrete by hand-held implements.

Honeycomb refers to voids left in concrete due to failure of the mortar to effectively fill the spaces among coarse aggregate particles.

Jitterbug refers to a grate tamper for pushing coarse aggregate slightly below the surface of a slab to facilitate finishing.

Liquid-tight concrete refers to applications using specific placement and finishing techniques and design features to minimize the loss of liquids.

Mesh roller refers to a finishing tool consisting of a rolling drum attached to a handle, of which the surface of the drum is made of mesh, sometimes used for rolling over the surface of fresh concrete to embed coarse aggregate

Rock pocket refers to a porous, mortar-deficient portion of hardened concrete consisting primarily of coarse aggregate and open voids; caused by leakage of mortar from the form, separation (segregation) during placement, or insufficient *consolidation.*

Sloped slabs refers to concrete slabs poured on slopes of 5:1 (Horizontal:Vertical) or steeper.

Technician refers to an individual trained in specific technical processes, and may include an engineer, government agency representative, private sector technical service provider, qualified independent third party quality assurance inspector, or a similar person that is primarily responsible for the project quality assurance.

Ternary mix is a mixture using three cementitious materials, such as Portland cement, fly ash, and ground granulated blast-furnace slag (slag).

Top bars are horizontal reinforcement placed such that more than 12 inches of fresh concrete is cast below the reinforcing bar (such as horizontal wall bars).

Vibration refers to mechanical energetic agitation of freshly mixed concrete during placement by mechanical devices, either pneumatic or electric, that create vibratory impulses of moderately high frequency to assist in consolidating the concrete.

- Internal vibration employs one or more vibrating elements that can be inserted into the fresh concrete at selected locations.

- Surface vibration employs a portable horizontal platform on which a vibrating element is mounted.

Water-cement ratio (w/c) is the ratio of the weight of free water (excluding that absorbed by the aggregates) to the weight of Portland cement in a concrete mix expressed as a decimal.

Water-cementitious material ratio (w/cm) is the ratio of the weight of free water (excluding that absorbed by the aggregates) to the weight of cementitious material (fly ash, Portland cement, and slag) in a concrete mix expressed as a decimal.

3. MATERIALS

The Contractor shall provide test data, independent laboratory reports, or other evidence from the concrete supplier showing that all materials meet the requirements of this specification. All materials proposed for use shall be approved by the *Technician*.

A. Portland cement shall conform to ASTM C 150 and shall be Type I, II, or III.

B. Fine aggregate shall conform to ASTM C 33 and be composed of clean, uncoated grains of material. Refer to the fine aggregate gradation table in Section 4 of this specification.

C. Coarse aggregates shall be gravel or crushed stone conforming to ASTM C 33 and be clean, hard, durable, and free from clay or coating of any character. Refer to the coarse aggregate gradation table in Section 4 of this specification.

D. Water shall be clean and free from injurious amounts of oil, salt, acid, alkali, organic matter, or other deleterious substances.

E. Air entraining agent shall conform to ASTM C 260.

F. Pozzolan (fly ash) shall conform to ASTM C 618, Class C or F. The loss of ignition shall not exceed 2 percent for Class C and 6 percent for Class F.

G. Ground granulated blast furnace (GGBF) slag shall conform to ASTM C 989.

H. Chemical admixtures shall be used in strict compliance with the manufacturer's recommendations, conform to ASTM C 494, and may be the following types:

- Type A - Water-reducing admixtures.
- Type B - Retarding admixtures.
- Type C - Accelerating admixtures.
- Type D - Water-reducing and retarding admixtures.
- Type E – Water-reducing and accelerating admixtures.
- Type F - Water-reducing, high range admixtures (superplasticizers).
- Type G - Water-reducing, high range, and retarding admixtures (superplasticizers).

If Type C or E is used, the manufacturer shall provide the technician a product data sheet verifying that the product is a non-chloride accelerator.

Calcium chloride or admixtures containing chloride ions other than from impurities in admixture ingredients shall not be used.

I. Preformed expansion joint filler shall be commercially available products made of sponge rubber, closed cell foam, or boards containing bituminous materials. The joint filler shall have a minimum thickness of ½ inch and a width equal to the full cross sectional width of the concrete at the joint.

J. Deformed reinforcing bars shall be free from loose rust, oil, grease, paint, or other deleterious matter. Steel bars for concrete reinforcement shall meet the requirements of ASTM A 615. The steel shall be deformed Grade 40 or Grade 60 billet-steel bars as noted on the plans.

K. Deformed welded wire reinforcement (WWR) shall conform to the requirements of ASTM A 1064 and shall be furnished in flat sheets, and shall be size D4 or larger as indicated on the plans. This material may only be used for non-structural elements such as slabs on grade. Spacing of welded intersections shall not exceed 16 inches.

L. Embedded waterstops shall be made of polyvinyl chloride (PVC) having a minimum width of 6 inches or the width shown on an NRCS approved Wisconsin Standard Drawing. The waterstop web thickness shall be a minimum of 3/16 inches throughout the entire cross section of the waterstop. Waterstops shall be the type intended for placement entirely within the concrete cross section, or as shown on an NRCS approved Wisconsin Standard Drawing or other drawings as approved by the NRCS State Conservation Engineer (SCE). Waterstops shall have ribbed or "dumb-bell" type anchor flanges and a hollow tubular center bulb. Split flange waterstops are prohibited.

M. Curing compound shall be a liquid membrane-forming compound suitable for spraying on the concrete surface. The curing compound shall meet the requirements of ASTM C 309. Type 2 (white pigmented).

N. Expansive waterstops shall consist of preformed strips or mastic (caulk) made of hydrophilic materials that expand when subjected to moisture and shall not contain bentonite. Use shall be limited to non-movement joints (fixed joints).

4. DESIGN OF THE CONCRETE MIX

The Contractor is responsible for submitting documentation of the proposed design mix to the Technician at least seven (7) days prior to the start of concrete placement. The Contractor is responsible for providing a mix that will meet the minimum compressive strength, *water-cement/water-cementitious ratio*, and mix requirements stated in the construction plans.

The minimum 28-day compressive strength shall be 3,500 psi unless otherwise specified in the construction plans. The water-cement (w/c) or the water-cementitious material (w/cm) ratio shall not exceed 0.45 for all concrete construction. The minimum cementitious material required shall be 564 pounds per cubic yard of concrete. The cementitious material may include a maximum of 25 percent (by weight) of fly ash or a maximum of 30 percent (by weight) of ground granulated blast-furnace (GGBF) slag. Mixes containing both fly ash and GGBF slag shall not exceed 30 percent in combination (*ternary mix*) and no more than 25 percent shall be fly ash. The remaining cementitious materials shall be Portland cement.

The air content (by volume) shall be 6 ± 1.5 percent of the volume of the concrete at the time of placement.

The maximum allowable slump, without the use of superplasticizers, shall be 5 inches. When superplasticizers are used, the slump shall not exceed 8 inches. Water-reducing admixtures may be used to increase the workability of concrete up to the maximum allowable slump while not exceeding the 0.45 water-cement (w/c) ratio or water-cementitious material (w/cm) ratio. Additional superplasticizer shall not be added to the concrete mix after discharge of the concrete at the job site has commenced.

The fine aggregate oven dry weight shall be 30-45 percent of the total oven dry weight of the combined coarse and fine aggregates. The well-graded fine aggregate shall conform to the following ASTM C 33 or Wisconsin DOT gradation requirements shown below:

Fine Aggregate Gradation

Sieve Size	Percent Passing By Weight	
	ASTM C 33	WI DOT
⅜" (9.5 mm)	100	100
No. 4 (4.75 mm)	95-100	90-100
No. 8 (2.36 mm)	80-100	---
No. 16 (1.18 mm)	50-85	45-85
No. 30 (600 µm)	25-60	---
No. 50 (300 µm)	5-30	5-30
No. 100 (150 µm)	0-10	0-10

The well graded coarse aggregate shall conform to the following ASTM C 33 gradation requirements for size number 67 aggregate shown below:

Coarse Aggregate Gradation

Sieve Size	Percent Passing By Weight
1” (25.0 mm)	100
¾” (19.0 mm)	90-100
⅜” (9.5 mm)	20-55
No. 4 (4.75 mm)	0-10
No. 8 (2.36 mm)	0-5

5. MIXING

Ready-mixed concrete shall be batched, mixed, and transported in accordance with ASTM C 94.

Concrete shall be uniform and thoroughly mixed when delivered to the forms.

No mixing water in excess of the amount shown for the design mix submitted by the Contractor shall be added to the concrete during mixing, hauling or after arrival at the delivery point.

The concrete shall be batched and mixed such that the temperature of the concrete at time of placement shall not be less than 50 degrees Fahrenheit or at no time during its production or transportation more than 90 degrees Fahrenheit.

6. *BATCH DELIVERY TICKET* INFORMATION

The Contractor shall obtain from the supplier a batch delivery ticket for each load of concrete before unloading at the site. Any concrete load delivered without a batch delivery ticket containing all the following information shall not be allowed to be discharged in any part of the construction project covered under this specification.

The following minimum information shall be included on the batch delivery ticket.

1. Job-pertinent information

   - Name of concrete supplier and batch plant.
   - Name of purchaser and job location.
   - Date of delivery.
   - Truck number.
   - Amount of concrete delivered.
   - Time loaded or time of first mixing of cement and aggregates.

2. Ingredients used to mix the contents

   - Mixing water in the load added as free water.
   - Type and amount of cementious materials.
   - Type and amount of admixtures.
   - Weights of fine and coarse aggregates.
   - Percent moisture content or weight of free water contained in the aggregates.

3. The Contractor is responsible for adding the following information

   - Volume of water added by the receiver of the concrete.
   - Time the concrete arrived at the site.
   - Time the concrete was completely unloaded.

Upon completion of the concrete placement, copies of all batch delivery tickets shall be provided to the Technician.

7. INSPECTION AND TESTING

The inspection and testing details of this section shall apply when specific concrete tests are required in the construction drawings or quality assurance plan. This testing does not relieve the Contractor of the responsibility to perform the work according to this specification. The Technician shall have free access to the work site to obtain samples.

When testing is conducted, the following methods shall be used:

Type of Test	Test Method (ASTM Designation)
Sampling	C 172
Slump	C 143
Air Content	C 231 or C 173
Making and Curing Specimens in the Field	C 31
Obtaining and Testing Drilled Cores	C 42
Compressive Strength	C 39
Density (Unit Weight)	C 138
Temperature	C 1064

Compressive strength of the concrete shall be considered satisfactory if test results equal or exceed the 28-day design strength. For each ASTM C 39 strength test, three test specimens shall be made. The test result shall be the average of the compressive strength tests of any two of the three test specimens. If one test specimen shows evidence of improper sampling, molding, or testing, it shall be discarded and the remaining specimens tested. The strengths of the remaining two specimens shall be averaged, and the result shall then be considered the compressive strength of the concrete. If more than one specimen shows such defects, the test is not valid and the remaining specimen shall be discarded.

If test results are invalid due to specimen defects or in-place concrete that is in question was not sampled, the in-place concrete may be sampled by coring in accordance with ASTM C 42. For core tests, at least three representative cores shall be taken from each area of the concrete in question. If one or more of the cores shows signs of being damaged before testing, it shall be replaced by a new one.

8. PLACEMENT OF SUBGRADE, FORMS, REINFORCING STEEL, AND WATERSTOP

A. Subgrade

The site shall be graded to the dimensions and elevations as specified in the construction plans.

All surfaces shall be *firm* and damp prior to placing concrete. Concrete shall not be placed on mud, dried earth, uncompacted fill, frozen subgrade, or in standing water. The use of plastic sheeting to isolate the concrete from unsuitable foundations shall not be permitted.

B. Forms

The forms and associated bracing shall be substantial and unyielding and constructed so that the finished concrete will conform to the specified dimensions and contours. Forms shall be mortar tight. Forms shall be coated with a form release agent before being set into place. Form release agent shall not come in contact with the steel reinforcement, waterstop, or with hardened concrete against which fresh concrete is to be placed.

For structures which are to be *liquid-tight*, form ties shall be used that permit their removal to a depth of at least ½ inch.

Concrete joints shall be placed at locations and be of the type shown on the construction drawings.

C. Reinforcing Steel

Reinforcement shall be accurately placed as shown on the drawings and secured in position in a manner that will prevent its displacement during the placement of concrete.

1. Tolerances - The following tolerances will be allowed in the placement of reinforcement:

   - Where 1½ inches clear distance is shown between reinforcing steel and forms, allowable clear distance is 1⅛ to 1½ inches.
   - Where 2 inches clear distance is shown between reinforcing steel and forms, allowable clear distance is 1⅝ to 2 inches.
   - Where 3 inches clear distance is shown between reinforcing steel and earth or forms, allowable clear distance is 2½ to 3 inches. Over-excavation backfilled with concrete shall not be considered as clear distance.
   - The maximum variation from the indicated reinforcing steel spacing shall be 1/12 of the indicated spacing, without a reduction in the amount of reinforcing steel specified.
   - The ends of all reinforcing steel shall be covered with at least 1½ inches of concrete.

2. Reinforcement Support - Holding steel reinforcement in position with temporary supports is not permitted. Tack welding of bars is not permitted. Metal chairs, metal hangers, metal spacers, plastic chairs, or concrete chairs shall be used to support the reinforcement. Any metal supporting devices shall have a protective coating, barrier, or finish between the reinforcing steel and the support and/or between the ground and the support, if the support is not fully encased in concrete. The coating, barrier, or finish can be hot dip galvanizing, epoxy, plastic, or stainless steel. Precast concrete chairs shall be manufactured from concrete equal in compressive strength to the concrete being placed. Reinforcement shall be supported as a minimum as follows:

   a. Deformed reinforcing bars for *flatwork* and *sloped slabs* shall be supported by a minimum of 1 support chair every 4 feet in each direction. Reinforcement shall not deflect or sag between supports. Deformed reinforcing bars shall be tied at every other rebar intersection or as approved by the Technician.

   b. Deformed welded wire reinforcement (WWR) shall be supported no further than as indicated in the table below.

WWR Support

Welded Wire Reinforcement Size[1]	Welded Wire Spacing	Maximum Support Spacing in Each Direction[2], feet
D9 or larger	12 inches or more	4 to 6 feet
D5 to D8	12 inches or more	3 to 4 feet
D9 or larger	Less than 12 inches	3 to 4 feet
D4 to D8	Less than 12 inches	2 to 3 feet

Notes: [1] "D" is the standard designation for deformed wire.

[2] Support spacing shall be adequate to support all loads, including construction personnel and equipment. If excessive deflections occur, closer support spacing is required.

Flatwork reinforcement may be driven on prior to placement of supports if both of the following conditions are met:

- The subgrade is firm so that minimal displacement is made by equipment. If significant displacement occurs, the steel shall be removed, the subgrade regraded and compacted before steel and concrete placement.

- The reinforcing steel is not deformed by the equipment. If the steel is deformed, it shall be replaced before concrete placement.

Steel tying to protruding steel from a previous pour or form construction for new concrete that will be in contact with previously poured concrete shall not be started until the previously poured concrete has cured a minimum of 12 hours.

3. Reinforcement Splice Lengths and Bend diameters:

   a. Deformed reinforcing bars

      Bend diameter: 6 bar diameters for #3 through #8 bar sizes and 8 bar diameters for larger bars. Reinforcing bars shall not be heated to facilitate bending.

      Splice Length: The minimum splice lengths in the table below are for 3,500 psi concrete (28-day design compressive strength). Other concrete strengths and reinforcement grades require different splice lengths in accordance with ACI 318. Deformed reinforcing bars shall not be spliced by welding. All lap splices shall be adequately tied together to firmly hold the reinforcement in position to maintain the proper splice length.

Minimum Splice Lengths [Note 1]

	Grade 40	Grade 60
#3 through #6 bars		
Top bars	27 bar diameters	41 bar diameters
all other bars	21 bar diameters	32 bar diameters
#7 and larger bars		
Top bars	34 bar diameters	51 bar diameters
all other bars	26 bar diameters	40 bar diameters

Note 1: Splice lengths shall be the greater of that indicated in the table or 12-inches.

   b. Deformed welded wire reinforcement (WWR) - Splice length shall be in accordance with the requirements of ACI 318-08 or ACI 318-11 Part 12.18. Deformed welded wire reinforcement shall not be spliced by welding. All lap splices shall be tied to firmly hold the reinforcement in position to maintain the proper splice length.

D. <u>Embedded Waterstop</u>

Embedded waterstops shall be located as shown on the drawings and secured in position so that displacement does not occur during concrete placement. Vertical applications (footing to wall joints and wall to wall joints) shall be secured to reinforcement using wire or “hog ring” type fasteners or factory installed grommets at the outermost rib at the spacing as recommended by the waterstop manufacturer (usually 12 inches on center). Hog rings shall be factory installed, if the manufacturer has that option available. Each waterstop shall be placed and secured with the hollow bulb aligned in the center of the planned joint.

Waterstop clearance shall be a minimum of 1½ inches from reinforcement and one half the waterstops width to the face of the concrete (3 inches for 6 inch wide waterstop).

Manufacturers' fabricated waterstop intersections shall be provided. Only straight butt joint splices are allowed for field fabrication. Splices in waterstops shall be welded as recommended by the manufacturer. Manufacturer-certified contractors may fabricate waterstop intersections in a controlled environment and with proper manufacturers' equipment. Prior to the time of delivery of the fabricated intersections, documentation of certification must be presented to the technician.

Joints with embedded waterstops shall not be placed horizontally across sloped slabs.

Continuous placement of concrete through a waterstop joint is not allowed, except for control joints in formed walls where preformed joint control formers are used in conjunction with the waterstops, or in control joints as shown on an NRCS approved Wisconsin Standard Drawing or other drawings as approved by the NRCS SCE.

Expansive Waterstop

Expansive waterstop shall be placed at the locations shown on the drawings in accordance with the manufacturer's instructions. Preformed strips may require adhesive or other forms of mechanical fastening to existing concrete based on the manufacturer's instructions. Mastic (caulk) type expansive waterstops shall be placed to the bead size as recommended by the manufacturer based on the amount of concrete cover provided. The adhesive for preformed expansive waterstop and the mastic for caulk type expansive waterstop shall be allowed to cure for the duration as indicated by the manufacturer prior to placing concrete over the waterstop. Colder temperatures will require longer curing periods prior to concrete placement. Do not allow the expansive waterstop to become wet prior to placing concrete over the waterstop.

9. PLACING, CONSOLIDATING, AND FINISHING CONCRETE

The Contractor shall notify the Technician of the proposed method of placement, *consolidation*, and finishing of the concrete at least seven (7) days prior to the start of concrete placement.

A. General

Prior to placement of concrete, the forms and subgrade shall be free of chips, sawdust, debris, water, ice, snow, extraneous oil, mortar, or other harmful substances or coatings. Any oil on the reinforcing steel or other surfaces required to be bonded to the concrete shall be removed. Concrete shall not be placed until the subgrade, forms, waterstop, and steel reinforcement have been inspected and accepted by the Technician. Any deficiencies shall be corrected before the concrete is delivered for placement. Forms, reinforcing steel, and subgrade shall be moistened prior to placing concrete.

B. Delivery

Concrete shall be delivered to the site and discharged into the forms within 1½ hours after the introduction of the mixing water to the cement and aggregates, or when a superplasticizer is used, the manufacturer's recommended time limit for discharge after addition shall apply. Upon arrival at the job site, addition of water will be allowed to adjust the slump, provided such addition does not exceed the water-cement (w/c) ratio or water-cementitious material ratio (w/cm) specified in the approved design mix. A small amount of concrete may be discharged prior to the addition of water. Final placement of the batch shall begin immediately after mixing of the added water is completed. No additional water shall be added to the mix after placement has begun.

C. Placement

Concrete shall be deposited as closely as possible to its final position. Concrete shall be worked into the corners and angles of the forms and around all reinforcement and embedded items in a manner to prevent segregation of aggregates. All placement shall be done in a manner that prevents incorporation of subgrade material into the concrete.

Methods for placing concrete on sloped slabs shall only include chutes, pumps, conveyors, wheelbarrows, or similar means of directly depositing concrete as near as possible to its final position. Placement of concrete by other methods where concrete is deposited upslope and flows to its final position downslope (commonly called "lava flow", "glacial pours", etc.) shall not be permitted.

Concrete shall not be dropped more than 6 feet vertically unless suitable equipment is used to prevent segregation. Concrete containing superplasticizer shall not be dropped more than 12 feet vertically and shall not be placed in lifts exceeding 6 feet in depth. Non-superplasticized concrete shall be placed in forms in horizontal layers not more than 24 inches deep. Each layer shall be thoroughly consolidated before the next is placed, at a rate such that previously placed concrete has not yet set when the next layer of concrete is placed upon it.

D. Consolidation

1) *Formed Surfaces*

Immediately after the concrete is placed in the forms, it shall be consolidated by internal *vibration* or *hand tamping* as necessary to insure dense concrete. Concrete in walls 4 feet and higher shall be vibrated. Concrete supplied with superplasticizer shall be placed with a minimum amount of vibrating and finishing effort. Vibration shall not be applied directly to the reinforcement steel or the forms, nor to concrete that has hardened to the degree that it does not become plastic when vibrated. Each pour shall be consolidated to insure a monolithic bond with the preceding pour. The use of vibrators to transport concrete in the forms, slabs or conveying equipment will not be permitted.

2) Slabs

Immediately after the concrete is placed, it shall be consolidated by hand or mechanical methods as necessary to insure dense concrete.

- Surface vibrators may be used to consolidate slabs 8 inches and less in thickness.
- Slabs more than 8 inches thick shall be consolidated with internal vibration and may be augmented through use of a surface vibrator.

Surface vibrators include vibrating screeds, plate or grid vibratory tampers, or vibratory roller screeds. (*Mesh rollers*, *jitterbugs*, and grate tampers are finishing tools and not consolidation tools.)

3) Embedded Waterstops

Internal vibration is required along the entire length of all joints that contain embedded waterstops for both formed surfaces and slabs.

E. Finishing

All screed support devices shall be removed from the concrete or driven down flush with the subgrade prior to finishing.

1) Formed Surfaces: All formed concrete surfaces shall be true and even, and shall be free of depressions, holes, projections, bulges, or other defects in the specified surface finish or alignment. All surface defects shall be repaired as stated in the "Form Removal" section of this specification.

2) Slabs: All flatwork and sloped slabs shall be worked to a uniform grade, maintaining the specified thickness. Concrete shall be worked to minimize segregation and in a manner that does not adversely affect the structural integrity, durability or function of the structure. Surfaces shall be free from *rock pockets*, or *honeycomb* areas or other harmful irregularities or defects.

   Water shall not be sprinkled or added to the surface of the concrete to facilitate finishing. An additional finish shall be applied if specified in the construction plans.

   The proposed finished texture (broom, float, mesh roller, trowel, non-slip, etc.) of the concrete surface shall be approved by the technician.

   Evaporation reducer may be used during the finishing operation if approved by the technician. Curing of the concrete is still required as per section 11, Curing.

   If a protective concrete coating is specified on the drawings, the coating manufacturer's recommendations for curing and surface preparation shall be followed.

F. Construction Joints

If the concrete sets during placement to the degree that it will not flow and merge with the succeeding pour when tamped or vibrated, the Contractor shall discontinue placing concrete and install a formed construction joint. The Contractor shall be prepared to install unplanned *construction joints* in the event that there is an interruption of the pour, equipment breakdown, or other problem which makes it necessary to stop placement of concrete at locations other than those previously planned. The reinforcement shall pass through the joint, unless otherwise indicated on the construction plan. Prior to the succeeding pour, the joint surface shall be cleaned to remove all unsatisfactory concrete, laitance, coatings, stains, or debris by one of the following methods:

1) The joint surface shall be cleaned to expose the fine aggregate and sound surface mortar, but not so deep as to undercut the edges of coarse aggregate. Cleaning shall be by wire brush, sandblasting, or high pressure air-water cutting after the concrete has gained sufficient strength to prevent displacement of the coarse aggregate. The joint surface shall be washed to remove all loose material after cutting.

2) According to methods specified by the person approving the construction plans.

The surfaces of all construction joints shall be wetted and standing water removed immediately prior to placement of the new concrete. The new concrete shall be placed directly on the cleaned and washed surface. New concrete shall not be placed until the hardened concrete has cured at least 12 hours. The newly placed concrete shall be consolidated to achieve a good bond with the previously hardened concrete.

10. FORM REMOVAL and CONCRETE REPAIR

A. Form Removal

Forms shall be removed without damage to the concrete. Supports shall be removed in a manner that permits the concrete to take the stresses due to its own weight uniformly and gradually. The

minimum period from completion of the concrete placement to the removal of the forms shall be based on either strength tests or cumulative times.

1) Strength Tests: The strength of the in-place concrete is determined by testing concrete cylinders specifically cast for this purpose and cured adjacent to the member in accordance with the ASTM C 31 methods for determining removal time. Unless otherwise specified, forms supporting the weight of the concrete member may be removed after the concrete strength is 70 percent of that specified for the 28-day compressive strength.

2) Cumulative Time: The total accumulated time, not necessarily continuous, that the air adjacent to the concrete is above 50 degrees Fahrenheit will be determined by the Contractor/Technician. The forms may be removed after the total accumulated time shown in the following table:

Form Removal

Forms		Time
Sides of slabs or beams without waterstop		12 hours
Sides of slabs or beams with waterstop		24 hours
Undersides of slabs or beams	Clear Span < 10 feet	4 days
	10-20 feet	7 days
	>20 feet	14 days
Sides of walls or columns	Height of forms < 20 feet	24 hours
	>20 feet	72 hours

For structures which are not required to be liquid-tight, form ties shall be removed flush with or below the concrete surface. For structures which are to be liquid tight, form ties shall be removed to a minimum depth of ½ inch. All cavities or depressions resulting from form tie removal shall be patched in accordance with Part C of this Section.

Forms shall be removed and the concrete inspected by the Technician before walls are backfilled. Concrete loading shall be in accordance with Section 14, Loading New Reinforced Concrete Structures.

B. Repair of Surface Defects (other than tie holes)

Immediately after removal of the forms, concrete which is honeycombed, damaged or otherwise defective as identified by the Technician shall be repaired or replaced by the Contractor. All repairs of surface defects shall be completed prior to the application of curing compound. Repair of surface defects such as honeycombed or otherwise defective concrete shall be made using bonding grout and site mixed Portland cement mortar or other products specifically intended to repair surface defects that are applied in accordance with the manufacturer's recommendations.

1) Bonding grout and site mixed Portland cement mortar:

a. Outline the honeycombed or otherwise defective concrete with a ½ to ¾ inch deep saw cut and remove such concrete down to sound concrete. When chipping is necessary, leave chipped edges perpendicular to the surface or slightly undercut. Do not feather edges.

b. Dampen the area to be patched plus another 6 inches around the patch area perimeter.

c. Prepare bonding grout by mixing approximately one part Portland cement and one part fine sand with water to the consistency of thick cream.

d. Thoroughly brush the bonding grout into the surface. When the bond coat begins to lose water sheen, apply repair mortar. Repair mortar is made by mixing 1 part Portland cement to 2½ parts fine sand (approximately finer than the No. 16 sieve size) by damp loose volume. The mortar shall be at a stiff consistency with no more mixing water than is necessary for handling and placing. Mix the repair mortar and manipulate the mortar frequently with a trowel without adding water.

e. Thoroughly consolidate the mortar into place and strike off, leaving the patch slightly higher than the surrounding surface to compensate for shrinkage. Leave the patch undisturbed for 1 hour before finishing. The repair shall be cured as specified Section 11, Curing.

2) Repair materials other than site mixed Portland cement:

a. Portland cement mortar modified with a latex bonding agent conforming to ASTM C 1059, Type II.

b. Epoxy mortars and epoxy compounds that are moisture-insensitive during application and after curing and that embody an epoxy binder conforming to ASTM C 881, Type III. The type, grade, and class shall be appropriate for the application as specified in ASTM C 881.

c. Nonshrink Portland cement grout conforming to ASTM C 1107.

d. Packaged dry concrete repair materials conforming to ASTM C 928.

e. Other products specifically intended to repair surface defects that are applied and cured in accordance with the manufacturer's recommendations.

C. Repair of Form Tie Holes

Liquid-Tight Concrete Structures – Repair tie holes immediately after formwork removal and prior to the application of curing compound. All cavities or depressions resulting from form tie removal shall be patched with commercially available patching products or site mixed Portland cement repair mortar.

a. Site-mixed Portland cement repair mortar

Repair mortar is made by mixing 1-part cement to 2.5-parts fine sand (approximately finer than the No. 16 sieve size) by damp loose volume. Mortar shall be at a stiff consistency with no more mixing water than is necessary for handling and placing. Mix the repair mortar and manipulate the mortar frequently with a trowel without adding water. Clean and dampen tie holes before applying the mortar. Cure in accordance with Section 11, Curing.

b. Repair materials other than site mixed Portland cement:

1) All those materials listed in Section 10.B.2.a-d.

2) Other products specifically intended to fill form tie holes for liquid-tight applications that are applied and cured in accordance with the manufacturer's recommendations.

11. CURING

Concrete shall be cured for a period of at least 7 consecutive days (curing period) after it is placed, except as stated in Section 13. Exposed concrete surfaces shall be kept continually wet during the entire curing period or until curing compound is applied.

Curing compound shall be applied at the rate and with the proper equipment recommended by the manufacturer. It shall form a uniform, continuous, adherent film that shall not check, crack, or peel and shall be free from pinholes or other imperfections.

Curing compound shall not be used at construction joints or other areas that are to be bonded to additional concrete. Surfaces subjected to heavy rainfall or running water within 3 hours after the application of curing compound, or surfaces damaged by subsequent construction operations during the curing period, shall be recoated in the same manner as the original application.

12. CONCRETING IN HOT WEATHER

For the purpose of this specification, hot weather is defined as any combination of the following conditions that impair the quality of freshly mixed or hardened concrete by accelerating the rate of moisture loss and rate of cement hydration, or otherwise resulting in detrimental results:

- High ambient temperature (generally above 80 degrees Fahrenheit)
- High concrete temperature
- Low relative humidity
- Wind velocity
- Solar radiation

In hot weather, or under conditions contributing to quick stiffening of the concrete, the time between the introduction of the mixing water to the cement and aggregates and discharge shall not exceed 45 minutes unless a set-retarding admixture is used meeting the requirements in Section 3 of this specification.

Special provisions shall be made to immediately protect and cure the concrete due to rapid drying conditions. Concrete surfaces shall not be allowed to dry after placement and during the curing period. It may be necessary to:

- Restrict placement to early morning, late afternoon or evening.
- Restrict the depth of layers to assure coverage of the previous layer while it will still respond readily to vibration.
- Use a fog spray to raise the relative humidity of the ambient air.
- Moist cure the concrete surface as soon as the surfaces are finished and continue for at least 24 hours.
- Schedule mixer trucks to avoid waiting time so the concrete will not begin to set.
- Suspend placement until conditions improve.

13. CONCRETING IN COLD WEATHER

The following provisions shall apply when the minimum air temperature at the local job site is less than 40 degrees Fahrenheit (forecast temperature and verified with a maximum/minimum thermometer at the start of the morning job shift).

A. No concrete shall be placed without the required thermometers at the job site.

B. The Contractor shall furnish the Technician a record of daily temperature data including:

- outside air maximum and minimum temperatures at the local job site, and
- temperatures, of the air adjacent to the surface of the concrete, at several points along the concrete surface for all concrete curing periods.

C. When the cement is initially added to the mix, the temperature of the mixing water shall not exceed 140 degrees Fahrenheit nor shall the temperature of the aggregate exceed 150 degrees Fahrenheit.

D. The temperature of the concrete at the time of placement shall be not less than 50 degrees Fahrenheit or at no time during its production or transport more than 90 degrees Fahrenheit.

E. At no time, during the first 10 days after concrete is placed, shall the minimum air temperature adjacent to the surface of the concrete be less that 32 degrees Fahrenheit.

F. The minimum air temperature adjacent to the surface of the concrete shall be maintained above 50 degrees Fahrenheit for a period of at least 7 accumulated days. These 7 days must occur during the first 10 days after the concrete is placed.

G. Placed concrete may be protected by covering, housing, insulating or heating concrete structures.

H. Combustion heaters shall have exhaust flue gases vented out of the concrete protection enclosure. The heat from heaters and ducts shall be directed in such a manner as to not overheat or dry the concrete in localized areas or to dry the exposed concrete surface.

I. The curing period may be reduced from 7 cumulative days to 3 consecutive days when Type III cement or an approved accelerating admixture is used.

At the end of the curing period, the concrete shall be allowed to cool gradually. The maximum temperature decrease at the concrete surface in a 24-hour period shall not exceed 40 degrees.

14. LOADING NEW REINFORCED CONCRETE STRUCTURES

Backfill material shall be the type indicated on the drawings and shall be free of large stones or debris.

Compaction within 3 feet of the new structure wall will be by means of small manually directed tamping or vibrating equipment.

The age of concrete shall be at least 7 days before any load (including backfill) is applied other than the weight of the wall, forms, or scaffolds for succeeding lifts or light equipment. The 7-days may be reduced to 3 days when Type III cement or an approved accelerating admixture is used. Loads may also be applied to new concrete less than 7 days after placement when 75 percent of the design strength has been attained through compressive strength testing on cylinders that have been cured on-site under field conditions.

WISCONSIN CONSTRUCTION SPECIFICATION

5. Construction Site Pollution Control

1. SCOPE

The work shall consist of installing measures or performing work to control erosion and minimize the production of sediment and other pollutants to water and air from construction activities.

2. MEASURES

Erosion and sediment control measures and works shall be installed to prevent or minimize sediment production and transport offsite. The measures and works shall include, but are not limited to, the following:

a. Diversions - Divert water from work areas and collect water from work areas for treatment and safe disposition. Temporary diversions shall be removed and the area restored to its near original condition when the diversions are no longer required or when permanent measures are installed.

b. In-Channel Sediment Control - Sediment produced within the stream channel during construction will be retained in the work area. Sediment retention will be accomplished by using a temporary, excavated sediment trap and/or a barrier constructed of geotextile and hay bales. Turbid water in the retention area may be pumped to a well-vegetated area away from the stream. The vegetation will serve to filter the sediments before the flow returns to the stream. Discharge areas from all pump hoses shall be stabilized. At no time shall the pump discharge be allowed to cause erosion at the discharge point.

c. Mulching - Mulch provides temporary protection of the soil surface from erosion. The method of application is specified on the construction drawings

d. Sediment Basins - Sediment basins collect, settle, and eliminate sediment from eroding areas from impacting properties and streams below the construction site(s). These basins are temporary and shall be removed and the area restored to its original condition when they are no longer required or when permanent measures are installed.

e. Sediment Filters - Straw bale filters or geotextile sediment fences (silt fence) trap sediment from areas of limited runoff. Sediment filters shall be properly anchored to prevent erosion under or around them. These filters are temporary and shall be removed and the area restored to its original condition when they are no longer required or when permanent measures are installed. The method is shown on the construction drawings.

f. Seeding - Seeding to protect disturbed areas shall occur as soon as reasonably possible following completion of that earthwork activity. All seeding operations shall be performed in such a manner that the seeds are applied in the specified quantities uniformly in the designated areas. The method and rate of seed application are specified on the construction drawings

g. Silt Curtain or Turbidity Barrier - Silt Curtain and Turbidity Barriers can be used to minimize the transport of sediment from an area where construction activities are occurring within or directly adjacent to a waterway or waterbody. The fabric shall be removed after the construction activities have ceased and the sediment has settled. Care should be taken to prevent the re-suspension of sediment during removal.

h. Staging of Earthwork Activities - The excavation and moving of soil materials shall be staged to minimize the area disturbed and the time these locations are vulnerable to erosion.

i. Stockpiling Material - The stockpiled materials shall be protected from concentrated flows and/or flooding, to minimize sediment movement offsite.

j. Stream Crossings - Culverts or bridges should be used where equipment crosses streams. They are temporary and shall be removed and the area restored to its near original condition when the crossings are no longer required or when permanent measures are installed.

k. Waterways - Waterways shall be used to safely dispose of runoff from fields, diversions, and other structures or measures. These works are temporary and shall be removed and the area restored to its original condition when they are no longer required or when permanent measures are installed.

l. It is the responsibility of the contractor or their designee for the cleanup or removal of sediment transported offsite due to failure to maintain erosion control measures during all phases of the construction.

3. CHEMICAL POLLUTION

The contractor shall safely dispose of chemical pollutants (such as drained lubricating or transmission fluids, grease, soaps, concrete mixer washwater, or asphalt, produced as a byproduct of the construction activities) off site. The contractor is responsible for reporting and clean up of all accidental spills and leaks.

In the event a piece of equipment develops a leak during the construction work, the leak shall be repaired before work continues. All excess fluids will be cleaned from the machine prior to its return to the work area.

If a leak occurs when equipment is working in or near a waterbody, the machine shall be immediately moved a safe distance away from the waterbody.

4. AIR POLLUTION

The burning of brush or slash and the disposal of other materials shall adhere to state and local regulations.

Fire prevention measures shall be taken to prevent the start or spreading of wildfires that may result from project activities. Firebreaks or guards shall be constructed and maintained.

All public access or haul roads used by the contractor during construction of the project shall be treated to fully suppress dust. All dust control methods shall ensure safe construction operations at all times. If chemical dust suppressants are applied, the material shall be a commercially available product specifically designed for dust suppression and the application shall follow manufacturer's requirements and recommendations. A copy of the product data sheet and manufacturer's recommended application procedures shall be provided to the technician before the first application.

5. MAINTENANCE, REMOVAL, AND RESTORATION

All pollution control measures and temporary works shall be adequately maintained in a functional condition for the duration of the construction period. All temporary measures shall be removed and the site restored to near original condition.

All equipment used within the construction site shall be well maintained. All equipment lines and fittings shall be checked on a daily basis to ensure that they are in good working order.

WISCONSIN CONSTRUCTION SPECIFICATION

7. Mobilization and Demobilization

1. SCOPE

The work consists of the mobilization and demobilization of the Contractor's forces and equipment necessary for performing the work required.

2. EQUIPMENT AND MATERIAL

Mobilization shall include:

- All activities and associated costs for transportation of the Contractor's personnel, equipment, and operating supplies to the site;
- Establishment of offices, buildings, and other necessary general facilities for the Contractor's operations at the site
- Premiums paid for performance and payment bonds including coinsurance and reinsurance agreements as applicable
- Construction and maintenance of haul roads and equipment parking areas
- Other job related items

Demobilization shall include:

- All activities and costs for transportation of personnel, equipment, and supplies not utilized in the project from the site
- Disassembly, removal, and site cleanup of offices, buildings, and other facilities assembled on the site.
- Repair of access roads, temporary haul roads, and equipment parking areas leaving the project site in the same or better condition than at the start of the project.
- General cleanup and house keeping needed to restore a neat and orderly project site.

Access to the site, equipment parking, and staging areas are limited to that shown on the drawings or as approved by the technician.

WISCONSIN CONSTRUCTION SPECIFICATION

9. ROCK RIPRAP

1. SCOPE

The work shall consist of testing, furnishing, transporting, and placing rock riprap, including filter, bedding or geotextile materials where specified, in the construction of loose rock riprap revetments, blankets, rock toes, crossings, rock chutes, channel linings and other similar structures.

2. QUALITY OF MATERIALS

The rock shall be obtained from tested sources unless exempted below. Rock sources used for streambank protection, lined waterways, rock chutes, or other similar major projects (Job Class II and above) shall be tested prior to use. A test is required a minimum of every ten (10) years. The Technician may require a more current test.

Rock riprap from igneous or metamorphic origins such as granite, basalt, and quartzite may be used without testing. Dolomite from quarries within the map legend units shown in Figure 1 may also be used without testing:

- Dolomite (Sd) - all counties.
- Sinnipee Group (Os) and Prairie du Chien (Opc) exempt only in the following counties: Marinette, Oconto, Shawano, Brown, Outagamie, Calumet, Winnebago, Green Lake, and Fond du Lac.

The Technician shall inspect and approve sources of these rock types prior to use and determine if testing is required.

Rock for equipment or cattle channel crossings, access roads, heavy use area protection or similar minor structures need not be tested.

Individual rock fragments shall be dense, sound and free from cracks, seams and other defects conducive to accelerated weathering. The rock fragments shall be angular to subrounded in shape. The least dimension of each individual rock fragment shall be not less than one-third the greatest dimension of the fragment. It should also be free from dirt, clay, sand, rock fines and other materials not meeting the gradation limits. Rock shall be excavated, selected and handled as necessary to meet the grading requirements stated in the construction plans.

Representative samples of rock requiring testing shall conform to the following requirements:

Bulk Specific Gravity (saturated surface-dry basis). Not less than 2.50 when tested in accordance with ASTM Specification C 127 on samples prepared as described for soundness testing.

Absorption. Not more than four (4.0) percent when tested in accordance with ASTM C 127 on samples prepared as described for soundness testing.

Soundness. The weight loss in five cycles shall not be more than 28 percent when tested by the sodium sulfate soundness test method in the modified ASTM C 88. Losses in excess of 20 percent are acceptable only when the design D_{50} rock size has been increased by 10 percent for a loss of 20-23.9 percent or 20 percent for a loss of 24-28 percent.

3. METHODS OF TESTING

Bulk Specific Gravity and Absorption shall be determined by ASTM C 127 on samples prepared as described for rock cube soundness testing.

Rock Cube Soundness. Soundness testing shall be performed by ASTM C 88 for coarse aggregate modified as follows.

The sodium sulfate soundness test shall be performed on a test sample of 5000 ± 300 grams of rock fragments, reasonably uniform in size and cubical in shape and weighing, after sampling, approximately 100 grams each. The test sample shall be obtained from rock samples that are representative of the total rock mass, as noted in ASTM Specification D 4992, and that have been sawed into slabs as described in ASTM Specification D 5121. The samples shall be further reduced in size by sawing the slabs into cubic blocks. The thickness of the slabs and the size of the sawed blocks shall be determined by the size of the available test apparatus and as necessary to provide, after sawing, the approximate 100 gram samples.

Due to internal defects, some of the cubes may break during the sawing process or during the initial soaking period. Cubes that break during this preparatory process shall not be tested. Such breakage, including an approximation of the percentage of cubes that break, shall be noted in the test report.

After the sample has been dried, following completion of the final test cycle and washing to remove the sodium sulfate, the loss of weight shall be determined by subtracting from the original weight of the sample the final weight of all fragments which have not broken into three or more fragments. (Samples that break into three or more large fragments during testing will be assigned a final weight of 0.0.) The test report shall show the percentage loss of the weight. Photographic documentation of all samples before and after testing shall be part of the test report.

Equivalent AASHTO testing specifications may be substituted for ASTM testing specifications.

A rock source may be rejected if the rock from that source deteriorates in less than 5 years under similar use and exposure conditions expected for the rock to be installed under this specification, even though it meets the testing requirements stated above.

Deterioration is defined as the visual loss of more than one-quarter of the original rock volume, or severe cracking that would cause a rock to split.

4. GRADATION

The gradation of the rock riprap and filter or bedding material shall be as shown in the construction plans.

Rock used for streambank protection, lined waterways, rock chutes, or other similar major projects (Job Class II and above) shall have a gradation verification be done by one of the following methods.

Method A
Measurement of a random truck load of stone (reference sample) according to the procedure outlined in EFH-17, Procedure for Determining Rock Weights, Sizes, and Gradations; or ASTM D5519, Standard Test Methods for Particle Size Analysis of Natural and Man-Made Riprap Materials (Test Method A).

Method B
Creation of reference samples of rock of at least 0.5 tons, made according to the procedure outlined in EFH-17 (Tables 1 - 5), creating the envelope limits of the gradation specified.

Control of project gradation will be by visual inspection comparing rock delivered to the reference samples.

The reference sample(s) may be used as part of the finished riprap or remain at the quarry.

Any difference of opinion between the Technician and the Contractor shall be resolved by dumping and checking (by measurement) the gradation of a random truck load of stone by Method A. Mechanical equipment, a sorting site, and labor needed to assist in checking gradation shall be provided by the Contractor at no additional cost.

5. SUBGRADE PREPARATION

The subgrade surfaces on which the riprap, filter or bedding material is to be placed shall be cut or filled and graded to the lines and grades as shown on the drawings or as directed by the Technician. When fill to subgrade lines is required, it shall consist of approved materials and shall be compacted as specified in Wisconsin Construction Specification 3, Earthfill. Riprap, filter, bedding or geotextile shall not be placed until the foundation preparation is completed, and approved by the Technician.

6. FILTER AND BEDDING

Filter or bedding material, when required, shall be spread uniformly on the prepared subgrade surfaces to the depth shown on the drawings. The surfaces of the layers shall be finished reasonably free of mounds, dips or windrows and shall meet the gradation shown on the plans or as specified in Wisconsin Construction Specification 8.

Geotextile, when required, shall meet the requirements shown on the drawings and as specified in Wisconsin Construction Specification 13, Geotextiles.

7. PLACING ROCK RIPRAP

The rock riprap shall be placed by equipment on the surfaces and to the depths specified. The rock riprap shall be installed to the full course thickness in one operation and in such a manner as to avoid displacement of underlying materials. The rock for riprap shall be delivered and placed in a manner that will ensure that the riprap in-place shall be reasonably homogeneous with the larger rocks uniformly distributed and firmly in contact one to another with the smaller rocks and spalls filling the voids between the larger rocks. Some hand placing may be required to provide a neat and uniform surface or to prevent damage to structures.

8. VEGETATED ROCK RIPRAP

If the rock riprap is to be vegetated, topsoil shall be placed by equipment in the riprap voids (surface) and on the surface of the rock to the depth specified. The topsoil placement shall not take place before the placement of the rock riprap is approved by the Technician. Topsoil shall be placed in such a manner as to avoid displacement of the underlying rock.

The topsoil may extend from the top of the riprap down to the bankfull elevation (OHWM) or as shown on the drawings. Care shall be taken so topsoil is retained on the rock and is not allowed into the water body. The area shall be seeded and mulched within 12 hours following topsoil placement.

Figure 1

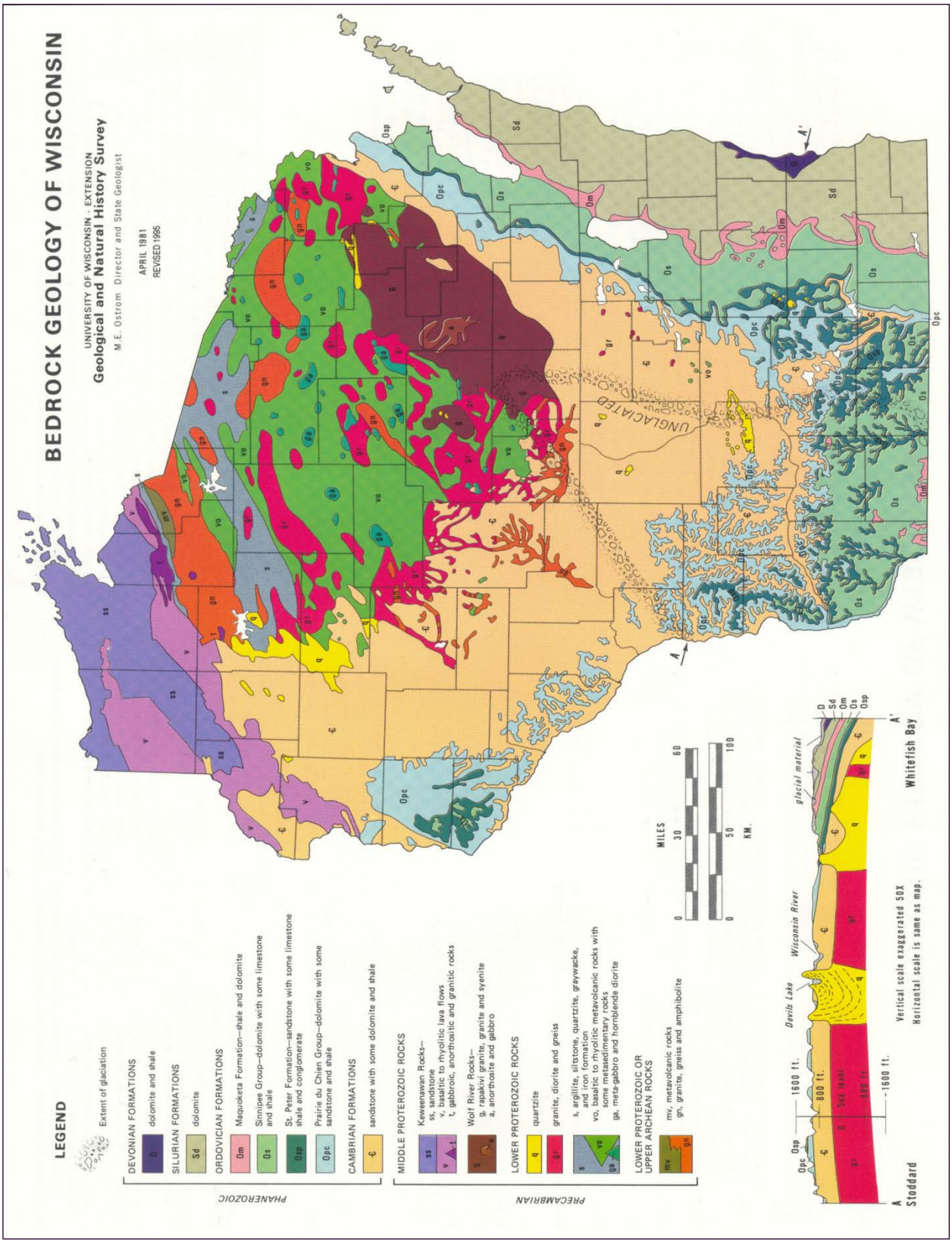
BEDROCK GEOLOGY OF WISCONSIN
UNIVERSITY OF WISCONSIN - EXTENSION
Geological and Natural History Survey
M.E. Ostrom Director and State Geologist
APRIL 1981
REVISED 1995
LEGEND
Extent of glaciation
PHANEROZOIC
DEVONIAN FORMATIONS
D dolomite and shale
SILURIAN FORMATIONS
Sd dolomite
ORDOVICIAN FORMATIONS
Om Maquoketa Formation—shale and dolomite
Os Sinnipee Group—dolomite with some limestone and shale
Osp St. Peter Formation—sandstone with some limestone shale and conglomerate
Opc Prairie du Chien Group—dolomite with some sandstone and shale
CAMBRIAN FORMATIONS
€ sandstone with some dolomite and shale
PRECAMBRIAN
MIDDLE PROTEROZOIC ROCKS
Keweenawan Rocks—
ss, sandstone
v, basaltic to rhyolitic lava flows
t, gabbroic, anorthositic and granitic rocks
Wolf River Rocks—
g, rapakivi granite, granite and syenite
a, anorthosite and gabbro
LOWER PROTEROZOIC ROCKS
q quartzite
gr granite, diorite and gneiss
s, argillite, siltstone, quartzite, graywacke, and iron formation
vo, basaltic to rhyolitic metavolcanic rocks with some metasedimentary rocks
ga, meta-gabbro and hornblende diorite
LOWER PROTEROZOIC OR UPPER ARCHEAN ROCKS
mv, metavolcanic rocks
gn, granite, gneiss and amphibolite
UNGLACIATED
MILES
0 30 60
0 50 100
KM.
A
A'
Devils Lake
Wisconsin River
glacial material
1600 ft.
800 ft.
Sea level
800 ft.
1600 ft.
Vertical scale exaggerated 50X
Horizontal scale is same as map.
Stoddard
Whitefish Bay

WISCONSIN CONSTRUCTION SPECIFICATION

10. Fences

PART I: STANDARD BARBED WIRE FENCE (SBWF)

1. SCOPE

The work shall consist of furnishing all materials required and installation of the fence at the locations shown on the plans. Part I of this specification applies to standard barbed wire fence (SBWF). Refer to Wisconsin NRCS Field Office Technical Guide, Section IV, Standard 382, Fence, Table 1 for minimum fence height, number of wires, and wire spacing.

Standard barbed wire fences (SBWF) shall have a minimum of three strands of barbed wire (interior fence only).

2. MATERIALS

A. Wire.

Wire shall conform to the requirements of ASTM A 121, Standard Specification for Metallic-Coated Carbon Steel Barbed Wire with Class 3 galvanizing meeting ASTM 641, Standard Specification for Zinc-Coated (Galvanized) Carbon Steel Wire. The wire will be new and consist of 2 twisted strands of 12.5-gauge steel wire with Class 3 galvanizing or 2 twisted strands of 15.5-gauge high tensile wire with Class 3 galvanizing. The barbs shall be minimum 2 point on 5-inch centers.

B. Fasteners.

(1) Staples shall be 9-gauge, Class 3 galvanized steel or heavier with a minimum length of 1.75 inches for softwoods and a minimum length of 1 inch for close-grained hardwoods.

(2) Manufacturer's clips or 14-gauge wire may be used to fasten wires to steel posts.

C. Posts.

(1) Wood.

All wooden posts and brace members (except red and white cedar, tamarack, osage orange or black locust) shall be treated by a method listed in Table 1, and ensure that complete penetration of the sapwood is obtained. All bark shall be removed from the cedar, tamarack, osage orange, and black locust. At least one-half the diameter of cedar shall be heartwood. The quality of treated wood shall provide sufficient strength and last for the expected life of the fence.

Unless otherwise specified, minimum preservation retention values shall be as listed in Table 1.

Table 1
Preservative Treatment Method and Minimum Retention

Treatment Method	Retention (lbs./ft.^{3})
Creosote Solution	8.00
Copper Naphthenate	0.055
Pentachlorophenol	0.40
Ammoniacal Copper Arsenate (ACA)	0.40
Chromated Copper Arsenate (CCA), Type A, B, or C	0.40
Micronized Copper Azole (MCA)	0.15
Micronized Copper Quaternary (MCQ)	0.34
Alkaline Copper Quaternary (ACQ or AC2)	0.40

All corner, end, pull, and gate assembly posts shall be wooden with a minimum top diameter of 5 inches.

Wooden line posts shall have a minimum 4-inch diameter.

(2) Steel.

Steel line posts shall have the standard "T" section, and nominal dimensions of 1⅜ inches by 1⅜ inches by ⅛ inch with anchor plate. The posts shall be rolled from high carbon steel, weigh at least 1.25 pounds per foot of length, and shall be painted with a weather resistant paint for steel, enameled and baked, or hot dip galvanized. The posts shall be studded to aid in wire attachment. Steel fence posts shall conform to the requirements of ASTM A 702, Steel Fence Posts and Assemblies, Hot Wrought.

(3) Other.

Other materials may be used for corner, end, gate assembly, line posts, and brace members if they are of equal or greater strength and quality of above. They must be preapproved by the technician.

3. INSTALLATION

A. Post Installation and Spacings.

Post spacing for line posts shall not exceed 16 feet for standard barbed wire fence and 25 feet for high tensile barbed wire fence.

B. Corner, End, Pull, and Gate Assemblies.

One of the following braces will be used:

(1) A floating diagonal brace or H-brace is required on corners or ends.

(2) H-bracing is required at all pull assemblies and must be installed every 660 feet maximum.

Wood horizontal or diagonal brace member shall be a minimum of 4 inches in diameter and a minimum of 7 feet in length, and 9 feet for diagonal braces. A tension wire composed of two complete loops of 9-gauge smooth wire, 12-gauge double strand wire, or a single loop of 12.5-gauge high tensile smooth wire shall be used for H-braces. One end of the tension member shall be at the height of the horizontal brace member and the other end shall be 4 inches above the ground line on the other post.

If the posts are to be set or driven to a 3-foot depth or more below the ground line, a single H-brace assembly may be used. Otherwise, a double H-brace assembly shall be used.

A corner assembly shall be used wherever the horizontal alignment changes more than 15 degrees and/or where vertical alignment changes more than 15 degrees.

C. Line Post.

Wooden line posts shall be set or driven a minimum of 24 inches below the ground line. Steel line posts shall be set or driven a minimum of 18 inches below the ground line. If posts are not driven, the backfill around the post shall be well compacted.

D. Fastening.

The top wire shall be at least 2 inches below the top of a wooden post, and 1 inch below the top of a steel post. The tension on the high tensile barbed wire should be 200 to 250 pounds on each wire. Tension will be applied with an in-line stretcher on each strand. To gauge tension, install a tension spring on at least one strand of wire. All wires shall be attached to each line post.

Staples shall be driven diagonally to the wood's grain and at a slight downward angle, (upward if pull is up) to avoid splitting the post and loosening of the staples. Space should be left between the inside crown of the staple and post to permit free movement of high tensile barbed wire. Barbed staples shall be used for wooden posts.

Wires shall be attached to steel posts using manufacturer's clips or by two turns of 14-gauge galvanized wire.

Wire shall be spliced by means of a Western Union splice or by suitable splice sleeves applied with a tool designed for the purpose. The Western Union splice shall have not less than 8 wraps at each end about the other. All wraps shall be tightly wound and closely spaced.

PART II: HIGH TENSILE PERMANENT ELECTRIC WIRE FENCE (HTPEWF) AND HIGH TENSILE NON-ELECTRIC WIRE FENCE (HTNEWF)

1. SCOPE

The work shall consist of furnishing all materials required and installation of the fence at the locations shown on the plans. Part II of this specification applies to high tensile permanent electric wire fence (HTPEWF) and high tensile non-electric wire fence (HTNEWF). Refer to Wisconsin NRCS Field Office Technical Guide, Section IV, Standard 382, Fence, Table 1 for minimum fence height, number of wires, and wire spacing.

High tensile non-electric wire fence (HTNEWF) shall have a minimum of four strands of high tensile smooth wire (interior fence only). The minimum number of wires is dependent on the use of the fence.

High tensile electric wire fence shall have a minimum of one strand of high tensile smooth wire (interior fence only). The minimum number of wires is dependent on the use of the fence.

Barbed wire shall not be used on electric fences because of the safety hazard created by the high capacity energizers needed to charge the heavy gauge wire.

2. MATERIALS

A. Wire.

The wire will be new, smooth, and meet or exceed the following:

- Gauge – 12.5
- Tensile Strength – 140,000 psi (minimum)
- Galvanizing – Class 3
- Breaking Strength – 900 lbs. (minimum)
- ASTM A 854, Metallic-Coated Steel Smooth High-Tensile Fence and Trellis Wire
- ASTM A 854, Metallic-Coated Steel Smooth High-Tensile Wire Core with UV-Resistant, White, Electrically Conducive Polymer Coating.

B. Fasteners.

(1) Staples shall be of 9-gauge galvanized steel or heavier with a minimum length of 1.75 inches for softwoods and a minimum length of 1 inch for close-grained hardwoods.

(2) Manufacturer's clips or 14-gauge Class 3 galvanized wire meeting the appropriate ASTM for the fencing material specified may be used to fasten wires to steel, plastic/composite, or fiberglass posts.

C. Posts.

(1) Wood.

All wooden posts and brace members (except red or white cedar, tamarack, osage orange, or black locust) shall be treated by a method listed in the table below to ensure that complete penetration of the sapwood is obtained. All bark shall be removed from the cedar, osage

orange, and black locust. At least half the diameter of cedar shall be heartwood. The quality of treated wood shall provide sufficient strength and last for the expected life of the fence.

Unless otherwise specified, minimum preservative retention values shall be as listed in Table 2.

Table 2
Preservative Treatment Method and Minimum Retention

Treatment Method	Retention (lbs./ft.^{3})
Creosote Solution	8.00
Copper Naphthenate	0.055
Pentachlorophenol	0.40
Ammoniacal Copper Arsenate (ACA)	0.40
Chromated Copper Arsenate (CCA), Type A, B, or C	0.40
Micronized Copper Azole (MCA)	0.15
Micronized Copper Quaternary (MCQ)	0.34
Alkaline Copper Quaternary (ACQ or AC2)	0.40

All corner, end, and gate assembly posts shall be wooden with a minimum top diameter of 5 inches. Assembly posts shall be a minimum of 8 feet long for single H-brace assemblies.

Wooden line posts shall have a minimum 4-inch diameter (2 ½-inch for osage orange).

(2) Plastic/Composite.

Plastic/composite line posts shall be at least 1 inch in diameter, have a manufacturer's warranty, and be durable for the life of the fence. All plastic/composite posts shall be UV protected for the life of the fence.

(3) Steel.

Steel line posts shall have the standard "T" section, nominal dimensions of 1⅜ inches by 1⅜ inches by ⅛ inch with anchor plate. The posts shall be rolled from high carbon steel, weigh at least 1.25 pounds per foot of length and shall be painted with a weather resistant paint for steel, enameled and baked, or hot dip galvanized. The posts shall be studded to aid in wire attachment. Steel fence posts shall conform to the requirements of ASTM A 702, Steel Fence Posts and Assemblies, Hot Wrought.

(4) Fiberglass.

Fiberglass reinforced posts must be at least ⅞-inch diameter, or fiberglass reinforced T-post at least 1-inch cross-section and have a manufacturer's warranty and be durable for the life of the fence.

(5) Other.

Other materials may be used for corner, end, gate assembly, line posts, and brace members if

they are of equal or greater strength and quality of above. They must be preapproved by the technician.

3. INSTALLATION

A. Post Installation and Spacings.

Live trees are not acceptable to use as posts.

Post spacing for line posts shall be a maximum of 50 feet for interior electric fence (except for a lane fence when it shall be 70 feet), or 30 feet for perimeter electric fence, except when stays are placed every 33 feet (then, the maximum post spacing shall be 100 feet). On sites where the land slope is less than 5 percent, a 50-foot maximum post spacing may be used for perimeter fence posts. For high tensile non-electric fence, the maximum post spacing shall be 12 feet if the fence is used to restrain animals.

B. Corner, End, and Gate Assemblies.

Brace assemblies are required at all corners, gates, pull, and end assemblies.

One of the following assemblies shall be used for all corners, ends, and gates:

(1) A floating diagonal brace.

(2) An H-brace.

(3) A substantial corner post. Corner posts are to be set or driven to a minimum of 4 feet below the ground line.

All brace members shall be wood and the horizontal member centerline shall be 4 to 9 inches below the top of the post. Other brace material of equal strength may be used with the preapproval of the technician. Floating diagonal braces shall be placed at ⅔ the height of the fence, measured from the bottom wire up.

Wood horizontal brace members shall be a minimum of 3 inches in diameter and a minimum of 7 feet in length, 9 feet for floating diagonal braces. A tension wire composed of two complete loops of 9-gauge smooth wire, 12-gauge double strand wire, or a single loop of 12.5-gauge high tensile strength smooth wire shall be used. One end of the tension member shall be at the height of the horizontal brace member and the other end shall be 4 inches above the ground line on the other post.

If the posts are set or driven to 3 feet or more below the ground line, a single H-brace assembly or floating diagonal brace may be used. Otherwise a double H-brace assembly shall be used.

A corner assembly shall be used when the horizontal alignment changes more than 30 degrees.

C. Line Post.

Wood, fiberglass, steel, and plastic/composite posts for HTNEWF shall be set or driven a minimum of 24 inches below the ground line for single or multiple wire fences. Wood posts for HTPEWF shall be driven a minimum of 24 inches below the ground line for single or multiple wire fences. Fiberglass, steel, and plastic/composite posts for HTPEWF shall be set or driven to a minimum of 12 inches below the ground line for a single wire fence and a minimum of 18 inches below the ground line for a multiple wire fence.

If posts are not driven, the backfill around the post shall be well compacted.

In areas where soil depth restricts the post embedment depth, additional anchors or deadman applied against the direction of pull shall be used.

D. Fastening.

The top wire shall be at least 2 inches below the top of the wooden post and 1 inch below the top of all other posts. Tension will be applied with an in-line stretcher or other tightener on each strand to achieve no visible sag. All wires shall be fastened to each line post.

Staples shall be driven diagonally to the wood's grain and at a slight downward angle (upward if pull is up) to avoid splitting the post and loosening of the staples. Space should be left between the inside crown of the staple and post to permit free movement of high tensile wire. Barbed staples shall be used for wood posts.

Wire shall be attached to steel, fiberglass, and plastic/composite posts using manufacturer's clips or two turns of 14-gauge galvanized wire.

The staples, wires, and clips should allow free movement of the high tensile fence wire.

Wire shall be spliced by means of a manufacturer's recommended splice or knot, or by suitable splice sleeves applied with a tool designed for the purpose.

E. Interior Fences.

For a 1-wire electric interior fence, a brace is not required at corners, gates, pull, and end assemblies.

F. Offset Brackets.

Offset brackets made of galvanized high tensile spring wire with insulator of high density polyethylene with ultra-violet stabilizer or porcelain can be attached to standard barbed wire fence or woven wire fence to provide a transmission line and/or to protect a standard fence. Place the offset brackets no further than 60 feet apart and attach to the wires of the standard fence next to the post. Place offset brackets at chest height of the animals to be controlled. Ensure that no wires of any existing fence comes in contact with the electric fence wire, as an electrical short will occur.

4. <u>LIGHTENING PROTECTION</u>

Lightening protection is required for all electrified fences. Follow the fence energizer manufacturer's recommendations.

5. <u>ADDITIONAL SPECIFICATIONS FOR HTPEWF</u>

A. Energizers.

(1) Power Source.

Electronic energizers or power fence controllers shall be installed according to the manufacturer's recommendations and will meet the following minimum specifications:

- High power, low impedance system with solid state circuitry capable of at least 5,000 volt peak output and a short pulse that is less than 300 mAmps in intensity, finished within .0003 of a second and a rate of 35-65 pulses per minute.
- High impact weather resistant cases.
- 110 volt, 220 volt conventional powered electric fence energizers.
- 12-volt battery powered capable of operating three weeks without recharging. If the length of fence requires an energizer of more than 4 joules, a solar charger will be needed on the battery systems.
- Minimum voltage output by livestock species:
  - cattle: 3000v
  - sheep and goats: 4000v
  - hogs and horses: 2000v
- Utilize a safety pace fuse to prevent over pulsing.

(2) Size.

Under normal operating conditions, the energizer should be capable, at a minimum, of producing 1 joule of energy for each mile of wire used. (Joules are units of electrical energy. One joule does about 0.74 ft-lb. of work. Watts x seconds = joules.) If a significant portion of the fence will be exposed to dense vegetation, additional energy requirements may be needed.

B. Grounding.

All electric fences must be properly grounded. The energizer ground wire shall be connected to a galvanized pipe or rod 0.5 inch or larger in diameter. A minimum of 3 feet of ground rod for each joule of energy output shall be installed to properly ground the fence.

Ground rods shall be placed where soil remains moist for best results. Drive a sufficient number of 6- to 8-foot long rods into the soil 10 feet apart to provide the required length of ground rod exposure to the soil. Connect a continuous ground wire from the energizer to each rod. The energizer terminals, ground wire, and ground rods shall be made of the same material (steel to steel, copper to copper) to prevent accelerated corrosion which could cause a loss of electric continuity.

Additional ground rods may be needed for the system to function properly. Follow the manufacturer's recommendations where they exceed the requirements of this standard.

The ground wire(s) of the fence may be connected to the same grounding system as the energizer or a separate grounding system. Where a combined grounding system is used, the design shall meet or exceed the minimum design criteria specified for both the energizer and lightening protector.

Do not use the grounding system for other existing applications, such as power poles, breaker boxes, and milk barns. At least 65 feet shall separate the fence grounding system from any other electrical grounding system.

C. Spike Protector.

A voltage spike protector is recommended for use with 120 and 140-volt energizers. Also, a ground rod shall be installed at the electric company's transformer pole (primary ground) and another ground rod installed at the electrical circuit breaker box (secondary ground), if they do not exist at the time of electric fence construction. Additionally, a surge protector shall be installed between the energizer and power supply.

D. Insulation and Insulated Cable.

Insulation used for positively charged wire(s) must be high-density polyethylene with ultra-violet stabilizer.

All underground wire(s) installations must be double insulated; molded; high tensile strength steel, 12.5-gauge or larger wire. The insulation must be high density polyethylene or polypropylene with ultra-violet stabilizer.

Insulators for steel and other conductive material posts shall be capable of withstanding at least 10,000 volts of current leakage and shall be made of high-density polyethylene with ultra-violet stabilizer or porcelain.

Insulators for end, corner, and angle braces shall be capable of withstanding at least 10,000 volts of current leakage and shall be made of high-density polyethylene with ultra-violet stabilizer, high-density polypropylene with ultra-violet stabilizer, or porcelain. Red insulators should not be used as they might attract hummingbirds.

Use insulated galvanized wire to cross gates and areas where electrical shocks to humans and livestock should be prevented (e.g., working facilities). For underground burial, use wire designed for burial. Placing buried cable inside plastic pipe helps to decrease the incidence of short-circuiting. Do not use insulated copper wire due to the potential for corrosion at the splice and a lack of tensile strength.

E. Gates.

(1) Electrified Gates.

Electrified gates may be constructed of a single straight wire, galvanized cable, polytape or electrified rope with a spring loaded insulated handle, or an expandable, coiled, high tensile, 12.5-gauge wire attached to an insulated handle. The number of wires shall be determined by the fence objective. The gate shall be constructed so that it is non-electrified when the gate is open. Overhead or underground transmission lines will be used to carry electricity past the gate to the remainder of the fence.

(2) Flood Gates.

An electrified floodgate may be used in lieu of a non-electrified gate if desired. The electrified floodgate is constructed by stretching an electrified wire across the drainage above high water flow level. Attach droppers of 12.5-gauge high tensile fence wire, galvanized cable, or galvanized chains to the electrified wire at a spacing of 6 inches above average normal water level. Connect gate to electric fence with double insulated cable through a cut-off switch and floodgate controller. If flooding is expected for extended periods of time, switch the floodgate off.

6. <u>ADDITIONAL SPECIFICATIONS FOR HTNEWF</u>

A. Grounding for Lightening Protection.

Non-electrical wire fences using wood posts shall be grounded at least every quarter mile. Ground rods should be driven not less than 4 feet into the ground. The rods shall be galvanized steel and a minimum of 0.5 inch in diameter. All line wires of the fence must be grounded.

PART III: WOVEN WIRE FENCE (WWF)

1. SCOPE

The work shall consist of furnishing all materials required and installation of the fence at the locations shown on the plans. Part III of this specification applies to woven wire fence (WWF). Refer to Wisconsin NRCS Field Office Technical Guide, Section IV, Standard 382, Fence, Table 1 for minimum fence height and wire spacing.

Standard woven wire fence (SWFF) shall consist of low-carbon steel woven wire with a single or multiple strands of either barbed wire or high tensile smooth wire with a minimum spacing of 2 to 6 inches starting at the top of the woven wire.

High tensile woven wire fence (HTWWF) shall consist of fixed knot or hinge joint high tensile woven wire with a single or multi strands of smooth high tensile wire, or high tensile barbed wire, 2 to 6 inches above the top of the woven wire. HTWWF may be electrified (see power requirements for electric fence). The bottom of the fence should be placed 7 inches above ground with a barbed wire along the ground.

Specialty high tensile woven wire fence (SHTWWF) shall consist of 49- to 96-inch high woven wire with a single strand of smooth high tensile wire, or high tensile barbed wire, 2 to 6 inches above the top of the woven wire. This type of fence is intended for deer, elk, and exotic animals.

2. MATERIALS

A. Wire.

SWWF shall be made from low-carbon steel wire with Class 3 galvanizing meeting ASTM A 641, Standard Specification for Zinc-Coated (Galvanized) Carbon Steel Wire, and conform to the requirements of ASTM A 116, Metallic-Coated, Steel Woven Wire Fence Fabric. The woven wire shall have the top and bottom strands 10-gauge or heavier. The intermediate and stay wires shall be 14.5-gauge or heavier. The stay wires shall be spaced a maximum of 12 inches apart.

HTWWF and SHTWWF will be made from high tensile steel wire with Class 3 galvanizing meeting ASTM A 641, Standard Specification for Zinc-Coated (Galvanized) Carbon Steel Wire, and conform to the requirements of ASTM A 116, Metallic-Coated, Steel Woven Wire Fence Fabric. The top and bottom strands of the woven wire shall be 12.5-gauge or heavier. The intermediate and stay wires shall be 14.5-gauge or heavier. The stay wires shall be spaced a maximum of 12 inches apart for non-electric woven wire, and 24 inches when the wire is electrified.

Barbed wire used with SWWF and HTWWF shall meet the requirements of Part I of this specification, Standard Barbed Wire Fence (SBWF).

High tensile wire used with SWWF, HTWWF, or SHWWF will be smooth and meet or exceed the following:

- Tensile Strength – 140,000 psi (minimum)
- Galvanizing – Class 3
- Gauge – 12.5
- Breaking Strength – 900 lbs. (minimum)

B. Fasteners.

(1) Staples shall be 9-gauge, Class 3 galvanized steel or heavier with a minimum length of 1.75 inches for softwoods and a minimum of 1 inch for close-grained hardwoods.

(2) Manufacturer's clips or 14-gauge, Class 3 galvanized wire may be used to fasten wires to steel posts.

C. Posts.

(1) Wood.

All wooden posts and brace members (except red or white cedar, tamarack, osage orange, or black locust) shall be treated by a method listed in the table below, and ensure that complete penetration of the sapwood is obtained. All bark shall be removed from the cedar, tamarack, osage orange, and black locust. At least one-half the diameter of cedar shall be heartwood. Quality of treated wood shall provide sufficient strength and last for the expected life of the fence.

Unless otherwise specified in the construction plan, minimum preservative retention values shall be as listed in Table 3.

Table 3
Preservative Treatment Method and Minimum Retention

Treatment Method	Retention (lbs./ft.^{3})
Creosote Solution	8.00
Copper Naphthenate	0.055
Pentachlorophenol	0.40
Ammoniacal Copper Arsenate (ACA)	0.40
Chromated Copper Arsenate (CCA), Type A, B, or C	0.40
Micronized Copper Azole (MCA)	0.15
Micronized Copper Quaternary (MCQ)	0.34
Alkaline Copper Quaternary (ACQ or AC2)	0.40

Corner, end, pull and gate assembly posts for HTWWF and SWWF shall be wooden with a minimum top diameter of 5 inches. Assembly posts shall be a minimum 7 feet long for single H-brace assemblies and for double H-brace assemblies. For SHTWWF, the length will depend upon the height of the fence and shall be as specified in the construction plan.

Bend assembly posts shall have a minimum top diameter of 4 inches and will be a minimum 7 feet long.

Wooden line posts shall have a minimum top diameter of 4 inches and shall be a minimum length of 7 feet. Fence posts for SHTWWF must be a minimum 5 inches in diameter.

(2) Plastic/Composite.

Plastic/composite line posts shall have a manufacturer's warranty, and be durable for the life of the fence. All plastic/composite line posts shall be UV protected for the life of the fence.

Plastic/composite line posts for SHTWWF and HTWWF shall be at least 1⅛ inches in diameter. Plastic/composite line posts cannot be used with SWWF.

(3) Steel.

Steel line posts shall have the standard "T" section, and nominal dimensions of 1⅜ inches by 1⅜ inches by ⅛ inch with anchor plate. The posts shall be rolled from high carbon steel, weigh at least 1.25 pounds per foot of length, and shall be painted with a weather resistant paint for steel, enameled and baked, or hot dip galvanized. The posts shall be studded to aid in wire attachment. Steel line posts shall be a minimum length of 5 feet. Steel fence posts shall conform to the requirements of ASTM A 702, Steel Fence Posts and Assemblies, Hot Wrought.

(4) Fiberglass.

Solid fiberglass reinforced posts must be at least 2 inches in diameter, have a manufacturer's warranty, and be durable for the life of the fence.

(5) Other.

Other materials may be used for corner, end, gate assembly, line posts, and brace members if they are of equal or greater strength and quality than above. They must be preapproved by the technician.

3. <u>INSTALLATION</u>

A. Post Installation and Spacings.

Post spacing for line posts shall not exceed 16 feet for SWWF and SHTWWF and 25 feet for HTWWF. Corner posts shall be set or driven 3 feet below the ground line unless a restrictive layer prevents installation to the required depth.

B. Corner, End, Pull, and Gate Brace Assemblies.

Brace assemblies are required at all corners, gates, pulls and ends.

One of the following assemblies for all corners, ends, pulls and gates shall be used:

(1) A floating diagonal brace.

(2) If the posts are to be set or driven to 3 feet below the ground line, a single H-brace assembly may be used.

(3) If the posts are to be set or driven to less than 3 feet below the ground line, a double H-brace assembly shall be used.

All brace members shall be wood and the horizontal member centerline shall be 4 to 9 inches below the top of the post. Other brace material of equal strength may be used with the preapproval of the technician.

The horizontal brace member shall be a minimum 4 inches in diameter and a minimum 7 feet in length. A tension wire composed of 2 complete loops of 9-gauge smooth wire, or a single loop of 12.5-gauge high tensile smooth wire shall be used. One end of the tension wire shall be at the height of the horizontal cross brace member and the other end of the tension wire shall be 4 inches above the ground line on the other post.

A corner assembly or bend assembly shall be used when the horizontal alignment changes more than 15 degrees and a pull assembly shall be used when vertical alignment changes more than 15 degrees. A bend assembly will be used only when it will not affect the integrity of the fence. Post spacing for a bend assembly can be determined by placing 3 stakes, each spaced 14 feet apart, along the fence line. A string then is stretched between the first and third stake. A measurement then is taken from the second stake and the string. The spacing of the posts is determined in Table 4.

Table 4
Post Spacing

Distance Between String and Stake	Post Spacing
0 to 4 inches	14 feet
5 to 7 inches	12 feet
8 to 10 inches	10 feet
11 to 15 inches	8 feet
16 or more inches	6 feet

These bend assembly posts will be wood and set with a 6-inch lean from vertical to the outside of the curve, and set or driven 36 inches below ground line.

Pull assemblies for SWWF shall be installed at intervals not to exceed 660 feet. The continuity of the wire shall be interrupted at the pull assembly.

HTWWF and SHTWWF will not need pull assemblies.

C. Line Post.

Wooden and plastic/composite line posts shall be set or driven a minimum of 24 inches below the ground line. If soil depth is less than 24 inches, use standard “T” steel posts.

Steel line posts shall be set or driven a minimum of 18 inches below ground line.

If posts are not driven, the backfill around the post shall be well compacted.

In areas where soil depth restricts the embedment depth, additional anchors or deadman applied against the direction of the pull shall be used.

D. Fastening.

The top wire shall be at least 2 inches below the top of a wooden post and 1 inch below the top of all other types of post. Tension of the fence should be set such that the sag between posts is no more than 1 inch. The tension crimp should be half the size of an untensioned crimp when stretched. All horizontal wires shall be fastened to each line post.

Wire shall be attached to steel, fiberglass, and plastic/composite posts using manufacturer's clips or two turns of 14-gauge galvanized wire.

Staples shall be driven diagonally to the wood's grain and at a slight downward angle (upward if the pull is up) to avoid splitting the post and loosening of the staples. Space should be left between the inside crown of the staple and post to permit free movement of high tensile wire. Barbed staples shall be used for wood posts.

The staples, wires, and clips should allow free movement of the high tensile fence wire.

All wire shall be spliced by means of a crimp or suitable knot, or by suitable splice sleeves applied with a tool designed for the purpose. The splice shall have not less than 8 wraps at each end about the other. All wraps shall be tightly wound and closely spaced.

E. Grounding.

Fences using wood posts shall be grounded for lightening protection at least every quarter mile, with ground rods driven not less than 4 feet into the ground. The rods shall be galvanized steel and a minimum of 0.5 inch in diameter. All line wires of the fence must be grounded. Add 12.5-gauge wire for the lead-out wire.

PART IV: CHAIN LINK FENCE (CLF)

1. SCOPE

The work shall consist of furnishing all materials required and installation of the fence at the locations shown on the plans. Part IV of this specification applies to chain link fence (CLF). Refer to Wisconsin NRCS Field Office Technical Guide, Section IV, Standard 382, Fence, Table 1 for minimum fence height and wire spacing.

2. MATERIALS

A. Chain Link Fence Fabric.

Chain link fence fabric shall be 9-gauge wire with a minimum tensile strength of 1,290 pounds. Chain link fence fabric shall conform to the requirements of ASTM A392, "Standard Specification for Zinc-Coated Steel Chain-Link Fence Fabric," 2-inch woven mesh, and 9-gauge galvanized steel wire. Zinc coating shall be Class 2. Polymer coated chain link fence fabric shall conform to the requirements of ASTM F 668, Standard Specification for Polyvinyl Chloride (PVC) and Other Organic Polymer-Coated Steel Chain-Link Fence Fabric. Any damage to the coating shall be repaired in accordance with manufacturer's recommendations, or the damaged fencing material shall be replaced.

B. Posts and Fence Framework.

Posts and fence framework shall conform to the requirements of ASTM F 1043 "Standard Specification for Strength and Protective Coatings on Steel Industrial Chain Link Fence Framework," Group 1A, for Heavy Industrial Fence. Coatings shall be Type A galvanized for both internal and external surfaces. Any damage to the coating shall be repaired in accordance with manufacturer's recommendations, or the damaged fencing material shall be replaced.

C. Gates, Gateposts, and Gate Accessories.

Gates, gateposts, and gate accessories shall conform to the requirements of ASTM F 900, Standard Specification for Industrial and Commercial Swing Gates. Coating shall be the same as selected for adjoining fence and framework.

D. Top Rail and Gate Frames.

Top rail and gate frames shall be a minimum 1.66 inch outside diameter standard (Schedule 40) steel pipe or Grade B high strength steel.

E. Line Posts.

Line posts shall be a minimum of 1.9 inches outside diameter standard (Schedule 40) steel pipe or Grade B high strength steel and be of sufficient length to support the height of the fence.

F. Corner, Gate, and End Posts.

Corner, gate, and end posts shall be a minimum of 2.375 inches outside diameter standard (Schedule 40) steel pipe or Grade B high strength steel, be of sufficient length to support the height of the fence, and be set in concrete.

G. Fence Fittings.

Fence fittings shall conform to the requirements of ASTM F 626, “Standard Specification for Fence Fittings.” Fittings shall be galvanized steel. Wire ties and clips shall be 9-gauge galvanized steel.

3. INSTALLATION

Installation shall be in accordance with the construction plans.

A. Post Installation.

All posts shall be capped immediately after installation. Where posts are installed in highly corrosive soils, the posts shall be vinyl coated in addition to the above requirements and set in concrete poured inside a clay tile or plastic tubing.

B. Braces and Top Rails.

Braces and top rails shall be installed horizontally at the height shown on the drawings or recommended by the manufacturer. Braces and top rails shall be attached to the posts by suitable fittings, as recommended by the manufacturer. A 7-gauge galvanized steel tension wire, meeting the appropriate ASTM for the fencing material specified, tightened by mechanical means, shall be placed approximately 4 inches from the ground level. A similar tension wire shall be placed at the top of the fence if a top rail is not used.

C. Chain Link Fabric.

Chain link fabric is generally installed on the outside of the fence post unless otherwise shown on the drawings. Fencing fabric shall not be stretched until at least 4 days after the posts are grouted into walls or 7 days after the posts are set in the concrete backfill or grouted into concrete walls. The fabric shall be stretched taut and securely fastened, using 9-gauge tie clips, to posts at intervals not exceeding 15 inches and to top rails or tension wires at intervals not exceeding 2 feet. Care shall be taken to equalize the tension on each side of each post.

A stretcher bar shall be used at terminal post locations.

D. Barbed Wire.

Barbed wire shall be installed as shown on the drawings and shall be pulled taut and fastened to each post or arm with the tie wires or metal tie clips.

E. Gate Frames.

Gate frames shall be fabricated and hung so they sag no more than 1 percent of the gate width.

PART V: BOARD FENCE (BF)

1. SCOPE

The work shall consist of furnishing all materials required and installation of the fence at the locations shown on the plans. Part V of this specification applies to board fence (BF). Refer to Wisconsin NRCS Field Office Technical Guide, Section IV, Standard 382, Fence, Table 1 for minimum fence height, number of boards, and board spacing.

A board fence shall have a minimum of three boards.

2. MATERIALS

All materials provided shall be durable for the intended use and life of the fence.

A. Wood

All wood posts, boards (horizontal boards) and brace members (except red or white cedar, tamarack, osage orange, or black locust) shall be treated by a method listed in the table below to ensure that complete penetration of the sapwood is obtained. Boards may be painted with an exterior paint durable for the life of the fence in lieu of preservative treatment. All bark shall be removed from cedar, osage orange, and black locust. At least half the diameter of cedar shall be heartwood. The quality of treated wood shall provide sufficient strength and last for the expected life of the fence.

Unless otherwise specified, minimum preservative retention values shall be as listed in Table 5.

Table 5
Preservative Treatment Method and Minimum Retention

Treatment Method	Retention (lbs./ft.3)	BOARDS Retention (lbs./ft.^{3})
Creosote Solution	8.00	8.0
Copper Naphthenate	0.055	0.055
Pentachlorophenol	0.40	0.40
Ammoniacal Copper Arsenate (ACA)	0.40	0.25
Chromated Copper Arsenate (CCA), Type A, B, or C	0.40	0.25
Micronized Copper Azole (MCA)	0.15	0.06
Micronized Copper Quaternary (MCQ)	0.34	0.15
Alkaline Copper Quaternary (ACQ or AC2)	0.40	0.20

Wood boards shall be well seasoned or kiln-dried to minimize warping.

B. Composite Wood

All composite wood products shall have a manufacturer's warranty for the intended use and life of the fence providing coverage against checking, splitting, splintering, rotting, structural damage from termites, and fungal decay of composite wood.

3. INSTALLATION

A. Posts

Posts shall be spaced to accommodate board lengths. Post spacing for wood fence shall not exceed 8 feet on center. Post spacing, size, and installation for composite wood fences shall meet manufacturer's recommendations for the intended use, and size and number of boards.

Wood posts will have a minimum top diameter of 6 inches for large livestock applications and 4 inches for small livestock. Angular wood posts shall have a minimum top, nominal dimension of 6 inches by 6 inches for large livestock applications and 4 inches by 4 inches for small livestock. Wood line posts will be set or driven a minimum of 36 inches. Gate and corner wood posts will be firmly set or driven in the ground a minimum of 48 inches. Wood posts will be of sufficient length to support the height of the fence and be firmly set or driven in the ground.

B. Boards

Boards for wood fence used for small animals and low pressure areas for large animals shall be a minimum size of 1 inch by 6 inches (nominal). Wood boards used for large animal confinement shall be a minimum size of 2 inches by 6 inches (nominal). Boards for wood fence shall be a minimum of 8 feet in length.

Board size for composite wood fence shall be in accordance with manufacturer's recommendations for the intended use of the fence.

Board length should be twice the post spacing with staggered seams on the posts. The boards shall be placed on the livestock side in corrals and other high pressure areas.

Each wood board shall be attached to each post with a minimum of two 16d hot dipped galvanized steel, stainless steel, copper, silicon bronze, or equivalent proprietary coated nails. For better holding power, use ring-shank, spiral, or screw-shank instead of common nails. Two 3-inch decking screws with like treatments may be used instead of nails. Increase the number of nails or screws by one additional nail or screw per 2 linear inches of board nominal width for board nominal widths exceeding 6 inches.

Each composite wood board shall be attached to each post in accordance with manufacturer's recommendations.

WISCONSIN CONSTRUCTION SPECIFICATION

13. GEOTEXTILES

1. SCOPE

This work shall consist of furnishing all materials, equipment, and labor necessary for the installation of geotextiles.

2. MATERIALS

The class and type of geotextile shall be as shown on the drawings.

Geotextiles shall be manufactured from synthetic long chain or continuous polymeric filaments or yarns composed of at least 95 percent by weight of polypropylene, polyethylene, polyester, polyamide, or polyvinylidene-chloride. Fibers shall contain stabilizers and/or inhibitors to enhance its resistance to ultraviolet light. The geotextile shall be formed into a stable network of filaments or yarns that retain dimensional stability relative to each other, including selvages. The geotextile shall be free of any chemical treatment or coating that might significantly reduce its permeability and shall have no flaws or defects that significantly alter its physical properties.

Thread used for factory or field sewing shall be of a contrasting color to the fabric and made of polypropylene, polyester, or polyamide thread. The sewing thread shall have a minimum breaking strength of 28 pounds when tested in accordance to ASTM D 2256. The thread shall be as resistant to ultraviolet light as the geotextile being sewn.

Additional requirements for geotextile materials are as follows:

a. Slit Tape Geotextile

Slit tape geotextile shall conform to the physical properties listed in Table 1. The slit tape geotextile shall be manufactured from a filament that is woven. The edges of the material shall be selvaged or otherwise finished to prevent the outer filament from unraveling.

b. Woven Geotextile

Woven geotextile shall conform to the physical properties listed in TABLE 1. The woven geotextile shall be manufactured from monofilament yarn that is woven into a uniform pattern with distinct and measurable openings. The fabric shall be manufactured so that the yarns will retain their relative position with regard to each other. The edges of the material shall be selvaged or otherwise finished to prevent the outer yarn from unraveling.

c. Nonwoven Geotextile

Nonwoven geotextile shall conform to the physical properties listed in TABLE 2. Nonwoven geotextile shall be manufactured from randomly oriented fibers that have been bonded together by needle-punching.

3. SHIPPING AND STORAGE

Geotextiles labeling, shipment, and storage shall follow ASTM D 4873. Product labels shall clearly show the manufacturer or supplier name, style name, and roll number. Each geotextile roll shall be wrapped with a material that will protect the geotextile, including the ends of the roll, from damage due to shipment, water, sunlight, and contaminants. The protective wrapping shall be maintained during periods of shipment and storage.

Prior to use, the geotextile shall be inspected and approved by the Technician, then stored in a clean, dry, place, out of direct sunlight, not subject to temperature extremes, and with the manufacturer's protective cover in place.

4. SURFACE PREPARATION

The surface on which the geotextile is to be placed shall be graded to the neat lines and grades as shown on the drawings. The surface shall be reasonably smooth and free of holes, vegetation, excessive mud, and projections. The surface preparation will be inspected and approved by the Technician prior to placing the geotextile.

5. PLACEMENT

a. General

The geotextile shall be placed on the approved, prepared surface at the locations and in accordance with the details shown on the drawings. The geotextile shall be unrolled along the placement area and loosely laid (not stretched) in such a manner that it will conform to the surface irregularities when the stone or other material is placed on or against it. The geotextile may be folded and overlapped to permit proper placement in the designated area.

No cuts, punctures, tears, or gaps in sewn or overlapped joints will be permitted in the geotextile.

The panel length shall be placed parallel to the direction of water flow, except as stated below in paragraph b. Slope Protection and d. Road Stabilization.

The geotextile panels may be joined by overlapping the roll ends 36 inches and sides a minimum of 18 inches and securing the overlap against the underlying foundation materials. The fabric shall be restrained as needed to prevent lifting and displacement during construction. Allowable restrainment methods include backfilled trenches, stitching, sandbags, rocks, and securing pins that are approved and provided by the geotextile manufacturer. The upstream or up-slope geotextile shall overlap the abutting down-slope geotextile.

The geotextile panels may be joined by machine sewing using thread described under 2. Materials. The seam shall conform to Federal Standard SSa-2, SSn-2 or SSd-2.The sewing shall consist of two parallel stitched rows spaced approximately 1 inch apart. Each row of stitching shall be located a minimum of 2 inches from the geotextile edge. The seam type and sewing machine to be used shall produce a seam strength, in the specified geotextile, that provides a minimum of 90 percent of the tensile strength in the weakest principal direction of the geotextile being used, when tested in accordance with ASTM D 4884. The seams may be

factory or field sewn. All seaming and stitching of woven geotextiles shall be in the selvage. Non-woven geotextiles shall be sewn a minimum of ½ inch from the edge. Geotextile shall be installed with the sewn seams pointing up.

The geotextile shall be restrained as needed during placement of overlying materials to prevent slippage, folding, or other movements of the geotextile.

Prior to covering, the geotextile shall be inspected by the Technician to ensure that the geotextile has not been damaged during construction. Backfill shall be placed by end dumping onto the geotextile from the edge of the geotextile or over previously placed backfill. Vehicles shall not be allowed directly on the geotextile. Materials shall be placed on the geotextile without causing tears, punctures, or separations of overlaps or sewn joints. Should such damage occur, the backfill around the damaged or displaced area will be removed and the subgrade restored to the original approved condition. Repair of the area shall consist of a patch of the same type of geotextile overlaying the existing geotextile. The patch shall extend a minimum of 2 feet from the edge of any damaged area.

b. Slope Protection

The geotextile shall not be placed until it can be anchored and protected with the intended covering within 48 hours. Temporary cover, for protection from ultraviolet light, may be used if the 48-hour limit will be exceeded. Material will not be dropped from a height of more than 3 feet on to uncovered geotextile. In lakeshore applications, the geotextile may be unrolled parallel or perpendicular to the bank. The geotextile shall be joined by machine sewing if the panel length is placed perpendicular to the direction of water flow (wave runup).

c. Subsurface Drains

The geotextile shall not be placed until drainfill or other material can be used to cover it within the same working day. Material will not be dropped from a height of more than 5 feet on to the geotextile and sharp, angular aggregates will not be used unless the drawing details state otherwise.

d. Road Stabilization

The geotextile shall be unrolled in a direction parallel to the roadway centerline in a loose manner permitting it to conform to surface irregularities when the roadway fill material is placed on it. Overlap shall be in the direction of construction. The minimum overlap of geotextile panels joined without sewing shall be 24 inches. The geotextile may be temporarily secured with pins recommended by the manufacturer. They shall be removed prior to placement of the covering material. Slit tape geotextile shall not be used in a wet location. Material will not be dropped from a height of more than 5 feet on to uncovered geotextile.

Table 1. Requirements for Woven Geotextiles by Use

Property	Test Method	Slope Protection		Road Stabilization	
		Unprotected (Class I)	Protected (Class II)	(Class IV)	Slit Tape
Tensile Strength (lbs.)[1]	ASTM D 4632 Grab Test	≥ 250 in any principal direction	≥ 120 in any principal direction	≥ 180 in any principal direction	≥ 200 in any principal direction
Elongation at failure (Percent)[1]	ASTM D 4632 Grab Test	≤ 20	≤ 35	≤ 35	≤ 10
Puncture (lbs.) [1]	ASTM D 6241	≥ 900	≥ 350	≥ 350	≥ 700
Ultraviolet Light (percent residual tensile strength)	ASTM D 4355 150 hours exposure	70 min.	70 min.	70 min.	70 min.
Apparent Opening Size (AOS)	ASTM D 4751	≥ #100 (.150 mm) and ≤ #70 (.212 mm) [3]	≥ #100 (.150 mm) and ≤ #70 (.212 mm) [3]	≥ #100 (.150 mm) and ≤ #70 (.212 mm) [3]	As specified or a min. size > #50 [3]
Percent Open Area (POA)	CW-02215 [2]	4.0 min.	4.0 min.	1.0 min.	N/A
Permittivity (1/seconds) (gal/sq. ft./min.)	ASTM D 4491	0.20 min. 15 min.	0.10 min. 7.5 min.	0.10 min. 7.5 min.	0.05 min. 3.8 min.

[1]Minimum average roll values (MARV); calculated as the mean minus two standard deviations, yielding a 95 percent confidence level that the table value will be equaled or exceeded.

[2]Test Methods prepared by U. S. Army Corps of Engineers

[3]U. S. Standard Sieve Size

Table 2. Requirements for Nonwoven Geotextiles by Use

Property	Test Method	Slope Protection		Subsurface Drainage	Road Stabilization
		Unprotected (Class I)	Protected (Class II)	(Class III)	(Class IV)[3]
Tensile Strength (lbs.) [1]	ASTM D 4632 Grab Test	≥ 180	≥ 120	≥ 90	≥ 180
Elongation At failure(percent)[1]	ASTM D 4632 Grab Test	≥ 50	≥ 50	≥ 50	≥ 50
Puncture(lbs.) [1]	ASTM D 6241	≥ 350	≥ 250	≥ 200	≥ 200
Ultra- Violet Light(percent residual tensile strength)	ASTM D 4355 150 hours exposure	70 min.	70 min.	70 min.	70 min.
Apparent Opening Size (AOS)	ASTM D 4751	As specified or max. #40 [2]	As specified or max. #40 [2]	As specified or max. #40 [2]	As specified or max. #40 [2]
Permittivity (1/seconds) (gal/sq. ft./min.)	ASTM D 4491	0.70 min. 52.5 min.	0.70 min. 52.5 min.	0.70 min. 52.5 min.	0.10 min. 7.5 min.

[1]minimum average roll values (MARV); calculated as the mean minus two standard deviations, yielding a 95 percent confidence level that the table value will be equaled or exceeded.

[2]U. S. Standard Sieve Size.

[3]Heat-bonded or resin-bonded geotextile may be used.

WISCONSIN CONSTRUCTION SPECIFICATION

15. Plastic Pipe Conduits

1. SCOPE

The work shall consist of furnishing and installing polyvinyl chloride (PVC), acrylonitrile-butadiene-styrene (ABS), and polyethylene (PE) plastic pipe and the necessary fittings as shown on the drawings. **This specification does not apply to corrugated polyethylene tubing used for subsurface drainage systems.**

2. MATERIALS

Polyvinyl chloride (PVC) pipe and fittings shall conform to the requirements of the following ASTM specifications unless otherwise stated on the drawings.

a. D 1785 PVC Plastic Pipe, Schedules 40, 80, and 120.
b. D 2241 PVC Pressure-Rated Pipe (SDR Series).
c. D 2464 Threaded PVC Plastic Pipe Fittings, Schedule 80.
d. D 2466 PVC Plastic Pipe Fittings, Schedule 40.
e. D 2467 Socket-Type PVC Plastic Pipe Fittings, Schedule 80.
f. D 2729 PVC Sewer Pipe and Fittings.
g. D 3034 Type PSM PVC Sewer Pipe and Fittings.
h. F 679 PVC Large-Diameter Plastic Gravity Sewer Pipe and Fittings.
i. F 789 Type PS-46 PVC Plastic Gravity Flow Sewer Pipe and Fittings.
j. F 794 PVC Profile Gravity Sewer Pipe and Fittings, Based on Controlled Inside Diameter.
k. F 949 PVC Corrugated Sewer Pipe with a Smooth Interior and Fittings.

Acrylonitrile-butadiene-styrene (ABS) plastic pipe and fittings shall conform to the requirements of the following ASTM specifications unless otherwise stated on the drawings.

a. D 1527 ABS Plastic Pipe, Schedules 40 and 80.
b. D 2282 ABS Plastic Pipe (SDR-PR)
c. D 2468 ABS Plastic Pipe Fittings, Schedule 40.
d. D 2469 Socket-Type ABS Plastic Pipe Fittings, Schedule 80.
e. D 2751 ABS Sewer Pipe and Fittings.

Polyethylene (PE) plastic pipe and fittings shall conform to the requirements of the following ASTM specifications unless otherwise stated on the drawings.

a. D 2104 PE Plastic Pipe, Schedule 40.
b. D 2239 PE Plastic Pipe (SIDR-PR) Based on Controlled Inside Diameter.
c. D 2447 PE Plastic Pipe, Schedules 40 and 80, Based on Outside Diameter.
d. D 3035 PE Plastic Pipe (SDR-PR) Based on Controlled Outside Diameter.
e. F 405 Corrugated Polyethylene (PE) Tubing and Fittings.
f. F 667 Large Diameter Corrugated PE Tubing and Fittings.
g. F 714 PE Plastic Pipe (SDR-PR) Based on Outside Diameter.
h. F 2306 PE Plastic Pipe and Fittings - Annular Corrugated Profile Walled - Based on Inside Diameter

The pipe shall be homogeneous throughout and free from visible cracks, holes, foreign matter, or other defects. The pipe shall be as uniform in color, opacity, density, and other physical properties as is commercially practicable.

3. JOINTS AND FITTINGS

Joints and fittings shall be of the same or similar materials as the pipe and equal to or exceeding that specified for the pipe to which it is attached.

Joints may be bell and spigot type with elastomeric gaskets, coupling type with elastomeric gaskets on each end or solvent cemented. The joints shall be installed according to the manufacturer's recommendations unless otherwise specified.

When a lubricant is required to facilitate joint assembly, it shall be a type having no detrimental effect on the gasket or pipe material.

4. HANDLING AND STORAGE

Pipe shall be delivered to the job site and handled by means which provide adequate support to the pipe and does not subject it to undue stresses or damage. When handling and placing plastic pipe, care shall be taken to prevent impact blows, abrasion damage, and gouging or cutting. All special handling requirements of the manufacturer shall be strictly observed. Special care shall be taken to avoid impact when the pipe must be handled at temperatures of 40°F or less.

Pipe shall be stored on a relatively flat surface so that the barrels are evenly supported. Unless the pipe is specifically coated to withstand exposure to ultraviolet radiation, it shall be covered with an opaque material when stored outdoors for a period of 15 days or longer.

5. LAYING AND BEDDING THE PIPE

The pipe shall be laid to the lines and grades as shown on the drawings and specified herein. The pipe shall be laid so that there is no reversal of grade between joints, unless otherwise shown on the drawings. The pipe shall not be dropped or dumped on the bedding or into the pipe trench. The ground surface near the pipe trench shall be free of loose rocks and stones greater than 1 inch in diameter. This ensures that rock will not be displaced and impact the pipe.

Just before placement, each pipe section shall be inspected to ensure that all foreign material is removed from inside the pipe. The pipe ends and the couplings shall be free of foreign material when assembled. At the completion of a work shift, all open ends of the pipeline shall be temporarily closed off using a suitable cover or plug.

Care shall be taken to prevent distortion and damage during unusually hot (over 90°F) or cold weather (under 40°F). After the pipe has been assembled in the trench, it shall be allowed to reach ground temperature before backfilling to prevent pull out of joints due to thermal contraction.

Bell and spigot pipe shall be laid with the bell pointed upstream. The pipe ends and couplings shall be free of foreign material when assembled.

Perforated pipe shall be laid with the perforations down and oriented symmetrically about the vertical centerline. Perforations shall be clear of any obstructions when the pipe is laid and before the pipe is approved for backfill.

The pipe shall be firmly and uniformly bedded throughout its entire length. The bedding depth and materials to be used will be as shown on the drawings. For pipe with bell joints, the bedding material shall be excavated at the locations of the bells to prevent the pipe from being supported by the bells.

6. PIPE EMBEDMENT

Earth bedding – The pipe shall be firmly and uniformly placed on compacted earthfill bedding or an in-place earth material bedding of ample bearing strength to support the pipe without noticeable settlement. The earth material on which the pipe is placed shall be of uniform density to prevent differential settlement.

Unless otherwise specified, a groove that closely conforms to the outside surface of the pipe shall be formed in the bedding. The depth of the groove shall be equal to or greater than 0.3 of the pipe diameter.

Earth bedding shall be compacted to a density not less than adjacent undisturbed in-place earth material or be compacted earth backfill. Earthfill material used for compacted earth bedding shall be free of rocks or stones greater than 1 inch in diameter and earth clods greater than 2 inches in diameter. The pipe shall be loaded sufficiently during the compaction of bedding under the haunches and around the sides of the pipe to prevent displacement from its final approved placement.

Sand, gravel, or crushed rock bedding – When sand, gravel, or crushed rock bedding is specified, the pipe shall be firmly and uniformly placed on the bedding material. Material for bedding shall not exceed 1 inch in diameter. Unless otherwise shown on the drawings, the coarse-grained bedding material shall be carefully placed and compacted to a depth equal to or greater than 0.3 of the diameter of the pipe above the bottom of the pipe. The pipe shall be loaded sufficiently during backfilling and compaction around the sides to prevent displacement of the pipe from its final approved placement.

Pipe encased in drainfill – The pipe shall be firmly and uniformly placed on bedding of specified drainfill. Drainfill shall be placed and compacted as specified in Wisconsin Construction Specification 8, Drainfill or as shown on the drawings. The pipe shall be loaded sufficiently during backfilling around the sides and during compaction to prevent displacement of the pipe.

Pipe encased in concrete – Concrete encasement shall be carefully placed to form a continuous uniform support around the entire circumference of the pipe or as shown on the drawings. Pipes encased in concrete shall be securely anchored to prevent movement of the pipe during concrete placement. A clear distance of 1.5 inches shall be maintained between the pipe and any reinforcing steel.

7. BACKFILL

Initial backfill – Unless otherwise specified or shown on the drawings, initial backfill to 6 inches above the top of the conduit is required. Earth haunching and initial backfill material shall consist of soil material that is free of rocks, stones, or hard clods more than 1 inch in diameter. Coarse backfill material shall be the specified sand, gravel, crushed rock, or drainfill material.

Initial backfill shall be placed in two stages. In the first stage (haunching), backfill is placed to the pipe spring line (center of pipe). In the second stage, it is placed to 6 inches above the top of the pipe.

The first stage material shall be worked carefully under the haunches of the pipe to provide continuous support throughout the entire pipe length. The haunching backfill material shall be placed in layers that have a maximum thickness of about 6 inches and are compacted as shown on the drawings or as stated in the Wisconsin Construction Specification appropriate for the backfill material. During compaction operations, care shall be taken to ensure that the tamping or vibratory equipment does not come in contact with the pipe and the pipe is not deformed or displaced.

Final backfill – Final backfill shall consist of placing the remaining material required to complete the backfill from the top of the initial backfill to the ground surface, including mounding at the top of the trench. Final backfill material within 2 feet of the top of the pipe shall be free of debris or rocks larger than 3 inches nominal diameter. Coarse backfill material shall be the specified sand, gravel, crushed rock, or drainfill. Final backfill shall be placed in approximately uniform, compacted layers. Final backfill compaction and layer thickness requirements shall be as shown on the drawings or as stated in the Wisconsin Construction Specification appropriate for the backfill material.

WISCONSIN CONSTRUCTION SPECIFICATION

24. Construction Surveys

1. Scope

The work consists of performing all layout, construction control, and documentation required by the project.

2. Equipment and Material

Conventional and Global Positioning System (GPS) survey equipment shall be of a quality and condition to provide the required accuracy. The equipment shall be maintained in good working order and in proper adjustment at all times. Equipment shall be checked, tested, and adjusted in conformance with manufacturer's recommendations.

3. Quality of Work

All work shall follow professional practice and the standards of the industry. The work shall be performed to the tolerances in Table 1. Notes, sketches, and other data shall be complete, legible, reproducible, organized to facilitate review, and allow reproduction of copies for job documentation.

Table 1 - Positional Accuracy and Allowable Tolerances (+/- ft)

	Elevation	Location by Distance[1]	Location by Given Coordinate[2]
Control Points (PT, PC, etc)	0.01	0.1	0.1
Concrete works and pipe inverts	0.01	0.1	0.1
Earth work	0.1	0.3	0.5

[1] Location relative to know baseline station or offset station (profile or cross section)
[2] Location relative to know coordinates (GPS or Total station)

<u>Point Closure Ratio Accuracy</u>

The closure error on a benchmark shall be 1:2,500 horizontally and 0.10 * $\sqrt{M}$ vertically.

The horizontal point closure is determined by dividing the linear distance misclosure of the survey by the overall circuit length of a traverse, loop, or network line/circuit (Sum of FS and BS distance). In cases where GPS vectors are measured in geocentric coordinates, the three-dimensional positional misclosure is assessed.

The vertical accuracy of a survey is determined by the elevation misclosure (feet) within a level section or level loop, where the line or circuit length (M) is measured in miles. (M = sum of FS and BS distance in miles)

4. Primary Control

Primary controls, which include items such as baselines, control points, and bench marks, necessary to establish lines, grades, and locations are shown on the drawings and have been established on the job site.

These baselines, control points, bench marks, and GPS coordinates shall be used as the origin of all surveys, layouts, and measurements to establish construction lines, grades, and locations. The Contractor shall take precautions to prevent the loss or damage of primary control points. Stakes or control points lost or damaged by construction activity will be reestablished by the Contractor or at the Contractor expense.

5. Construction Surveys

Electronic GPS coordinates and elevation files, used as primary control and for design, will be provided to the Contractor. No work shall take place <u>without approval of field layout</u> by the Technician.

The Contractor is responsible for the following items by use of conventional or GPS survey equipment.

a. Establishing centerline for location and alignment.
b. Establishing location and elevation of additional control points.
c. Setting slope stakes and reference stakes.
d. Intermittent checking and any supplemental or interim staking.
e. Establishing final grade stakes.
f. Providing final constructed locations and grades for the work.
g. Recording survey documentation.

6. Records

Survey data shall be recorded in fully identified standard hard-bound engineering survey field notebooks with consecutively numbered pages. All field notes and printed data shall include the purpose or description of the work, the date the work was performed, sketches, and the personnel who performed and checked the work.

Electronically generated survey data shall be cross referenced in the bound field notebook containing the index for all survey activities.

The construction survey records shall be available at all times during the progress of the work for examination and use by the Technician and when requested, copies shall be made available.

The original field notebooks and other records shall be provided to the Government for acceptance of all work. The records will become the property of the owner.

7. Acceptance

The job will not be accepted until all surveys are complete and required documentation has been determined complete. The Technician shall conduct quality assurance checking. Checking shall include the visual review of survey markings, notes, and random surveys to check for accuracy.

WISCONSIN CONSTRUCTION SPECIFICATION

26. Topsoiling

1. SCOPE

The work consists of furnishing and spreading topsoil to specified depths at locations shown on the drawings. This specification does not apply to any other earthfill.

2. MATERIALS

Topsoil shall consist of naturally occurring friable surface soil reasonably free of grass, roots, weeds, sticks, rocks, other unsuitable material, herbicides, or other compounds whose presence would prevent establishment of grass and/or legume sod cover.

Topsoil shall be obtained from soil surfaces containing USDA soil textural classifications of loam, sandy loam, silt loam, silty clay loam, sandy clay loam, or clay loam soils shown on the drawings or acceptable to the Technician.

Topsoil shall:

- be salvaged from designated areas that will be disturbed by construction activities or be furnished from an offsite source designated by the Contractor. The Technician shall be granted access to the source for inspection and acceptance before delivery to the site.
- meet the following requirements (when testing is required):
  - 100% passing the ¾-inch sieve.
  - minimum 95% passing the #10 sieve.
  - minimum 25% passing the #200 sieve.
  - 3% - 15% organic material.
  - non-positive herbicide carryover (UW Extension Publication A3819, Herbicide Persistence and Carryover).

3. TESTING

The Technician will determine the need for testing the topsoil for gradation, percent organic matter content, and herbicide carryover effect. The testing will be at the expense of the Contractor.

4. FOUNDATION PREPARATION AND PLACEMENT

The surfaces designated to receive a topsoil application shall be cleared of all objectionable materials including trees, stumps, roots, brush, rubbish, and stones having a maximum dimension greater than 6 inches. The surfaces shall be lightly scarified just before the spreading operation. Topsoil shall not be placed until the required excavation, fill and preparation of the surfaces is complete and approved by the Technician.

Spreading shall not be conducted when the ground or topsoil is frozen, excessively wet, or otherwise in a condition detrimental to uniform spreading operations. Snow, ice, or frozen material shall not be incorporated in the topsoil.

Topsoil shall be placed in approximately horizontal layers no greater than 8 inches thick.

Placement of topsoil adjacent to concrete structures may begin after the concrete has cured for the minimum time specified. Heavy equipment shall not be operated within 2 feet of any structure.

Following the spreading operation, the topsoil surface shall be left reasonably smooth and without ruts or surface irregularities that could contribute to concentrated waterflow downslope.

5. MOISTURE CONTENT

Topsoil shall have a moisture content sufficient to insure the spreading of the material to the required thickness. When kneaded in the hand the soil will form a ball which does not readily separate and will not extrude out of the hand when squeezed tightly. The adequacy of the moisture content will be determined by the Technician.

6. COMPACTION

The Contractor shall furnish and operate the types and kinds of equipment necessary to compact the topsoil material when specified. The Technician shall determine if adequate compaction is being achieved.

Adequate compaction is defined as a firm surface able to support the growth of vegetation. Methods for compaction may include back-blading or a single pass from a rubber tire, track, or roller. A pass shall consist of complete coverage by the rubber tire, track, or roller over the entire surface of the topsoil. Care must be taken to avoid excessive compaction of topsoil.

Adjacent to structures or in confined areas, compaction of topsoil shall be accomplished by means of manually directed power tampers of plate vibrators or hand tamping, unless otherwise specified.

Where compacted earthfill is designated to be topsoiled, the topsoil shall be placed concurrently with the earthfill and shall be bonded to the compacted fill with the compacting equipment.

WISCONSIN CONSTRUCTION SPECIFICATION

204. EARTHFILL FOR WASTE STORAGE FACILITIES

1. SCOPE

The work shall consist of all operations necessary to place the earthfill required by the drawings or directed by the Technician.

2 MATERIALS

All fill materials shall be obtained from required excavations and designated borrow areas. The selection, blending, routing, and disposition of materials in the various fills shall be subject to approval by the Technician.

Fill materials shall contain no sod, brush, roots, frozen soil, or other perishable materials. Stones larger than two-thirds of the uncompacted layer thickness shall be removed from the materials prior to compaction of the fill.

3. GENERAL

Construction operations shall be carried out in such a manner and sequence that erosion and air and water pollution will be minimized. The completed job shall present a professional appearance and shall conform to the lines, grades, and elevations as shown on the drawings or as staked in the field. All operations shall be carried out in a safe and skillful manner. Safety and health regulations shall be observed and appropriate safety measures used.

4. FOUNDATION PREPARATION

The foundation area shall be cleared of trees, stumps, roots, brush, rubbish, frozen soil, and stones having a maximum dimension greater than 6 inches. Foundations shall be stripped to remove vegetation and other unsuitable materials to a minimum depth of 6 inches or to a greater depth if so shown on the drawings. Topsoil shall be stripped from the foundation area and stockpiled for use as a top dressing for vegetation establishment unless otherwise shown on the drawings.

The moisture content of the scarified foundation materials shall be maintained as specified for the earthfill in Section 7. The surface materials of the foundation shall be compacted and bonded with the first layer of earthfill as specified for subsequent layers of earthfill.

5. EXCAVATION

The required excavations shall conform to the lines, grades, and elevations as shown on the drawings. Excavation beyond specified limits shall be corrected by filling with approved compacted materials.

The required dimensions and side slopes of all structure and trench excavations shall be as shown on the drawings. Trenches deeper than 4 feet shall have side slopes above the 4-foot depth excavated at 0.5:1 or flatter depending on the materials being excavated or the trench shall be braced to safeguard the work and workers. When backfilling pipe trenches in the waste storage facility embankment, the trench slopes shall be cut back to 1:1 from 12 inches above the top of the pipe. The backfill material and compaction shall be equivalent to the surrounding embankment.

To the extent that they are needed, all suitable materials removed from the specified excavations shall be used in the construction of the required earthfill. The suitability of materials for specific purposes will be determined by the Technician.

All surplus or unsuitable excavated materials shall be disposed of at the locations shown on the drawings or as approved by the Technician. Surplus materials shall not be placed in wetlands.

6. BORROW AREAS

When the quantities of suitable materials obtained from specified excavations are insufficient to construct the specified fill portions of the permanent works, additional materials shall be obtained from the designated borrow areas. The borrow area shall be stripped to remove vegetation or other unsuitable materials to a minimum depth of 6 inches or to the depth shown on the drawings. This stripping shall be performed immediately prior to use of the borrow material to reduce the time the area is exposed to erosion. For large borrow areas, only a portion of the area should be stripped at a time.

7. FILL MOISTURE CONTENT

Fill materials shall have a moisture content sufficient to insure the required compaction. When kneaded in the hand, the soil will form a ball which does not readily separate and will not extrude out of the hand when squeezed tightly. The adequacy of the moisture content will be determined by the Technician.

If the top surface of compacted fill is too dry to permit suitable bond, it shall either be removed or scarified and wetted by sprinkling to an acceptable moisture content prior to placement of the next layer of fill. The applied water must be allowed time to be absorbed by the fill or disked into the dry layer.

Fill material that is too wet shall be allowed to dry to an acceptable moisture content before placement. If the top surface of compacted fill is too wet, it shall be either removed or allowed to dry to an acceptable moisture content before compaction or placing additional layers of fill.

8. FILL PLACEMENT

Fill shall not be placed until the required excavation and preparation of the underlying foundation is completed and approved by the Technician. Fill shall be placed beginning at the lowest elevation of the foundation. No fill shall be placed on a frozen surface.

If the surface of any layer becomes too hard and smooth for proper bond with the succeeding layer, it shall be scarified parallel to the axis of the fill to a depth of not less than 2 inches before the next layer is placed.

Available topsoil shall be placed on the top and the exposed outside slopes of the waste storage facility embankment, the borrow areas, and any other area where the topsoil was removed during construction and where vegetation will be established.

The pre-compacted thickness of each layer of fill and compaction requirements shall be as stated below unless otherwise specified in the construction plans. Materials placed by dumping in piles or windrows shall be spread uniformly to not more than the specified layer thickness prior to

compaction. The Technician shall determine if adequate compaction is being achieved and may require more than the minimum specified passes of the compaction equipment.

(a) Embankments. The fill shall be placed in horizontal layers extending the entire length and width of the embankment. Unless otherwise specified in the construction plans, compaction requirements shall be as shown in Table 1. Each layer shall be compacted by a minimum of one pass over the entire surface of the fill by the compaction equipment.

(b) Adjacent to Structures and Pipes. Adjacent to structures or pipes, earthfill shall be placed in 4-inch lifts (prior to compaction) in a manner adequate to prevent damage to the structure and to allow the structure or pipe to gradually and uniformly assume the backfill loads. Compaction shall be accomplished by means of manually directed power tampers or plate vibrators or hand tamping unless otherwise specified. Heavy equipment shall not be operated within 2 feet of any structure or pipe. Compaction by means of drop weights operating from a crane or hoist of any type will not be permitted.

All intrusions into or penetrations of a clay or other soil liner will be backfilled with equivalent material and compacted to maintain its integrity. Pipe trenches into a storage facility will be backfilled with the same soils and compaction required for the storage facility for the distance shown on the drawings.

(c) Clay Liners. A clay liner shall be installed as designated on the drawings. This work shall consist of constructing an impermeable earthliner for the inside slopes and the bottom of the earthen basin to the thickness shown on the drawings. It also includes the liner material placed in conjunction with other liner materials to form a composite liner as shown on the drawings. Only soils approved by the Technician will be used.

The liner fill shall be placed in layers with a maximum thickness of 6 inches prior to compaction. The liner material shall be disked or worked in such a manner as to obtain a maximum clod size of 4 inches prior to compaction. Each layer shall be compacted by a minimum of one pass over the entire surface of the fill by a fully-loaded rubber-tired front end loader or scraper or a sheepsfoot or tamping roller. Smooth drum rollers are not suitable for compaction of clay liners. Operation of the compaction equipment will be continuous over the entire area during fill operations. Any liner area disturbed by subsequent construction operations will be scarified and recompacted as specified.

(d) Small Areas of Unsuitable Materials. Lenses or pockets of soil not meeting the criteria requirements in NRCS Standard 313 shall be removed and replaced with specified materials. The extent of removal and the quality of replacement materials will be as shown on the drawings or approved by the Technician. Excavated slopes shall be 1:1 or flatter. Replacement soil material placement, layer thickness, and compaction will be as stated for clay liners. Manually directed power tampers may be used for compaction and the soil shall be placed in 4-inch lifts prior to compaction.

Table 1 - Embankment Compaction Requirements

Equipment Type	Applicable Soils[1]	Maximum Fill Height[2] (feet)	Layer Thickness[3] (inches)
Sheepsfoot or tamping roller 10,000 lb. min. operating weight	ML, MH, CL, CH SM, SC, GM, GC	None	9
Vibratory tamping roller 9,000 lb. min. operating weight	SM, SC, GM, GC	None	6
Smooth drum vibratory roller 10,000 lb. min.	SP, SW, GP GW	20	6
Rubber-tired scraper (fully loaded)	ML, MH, CL, CH SM, SC, GM, GC	None	9
Rubber-tired front end loader (fully loaded)	ML, MH, CL, CH SM, SC, GM, GC	20	6
Track-type crawler standard tracks 30,000 lb. min.	SM, SC, GM, GC, ML, CL SP, SW, GP, GW	10	6
Farm tractor 2,400 lb. min.	ML, MH, CL, CH, SM, SC, GM, GC	15	6

[1] Unified Soil Classification System.

[2] Measured from the top of the fill to the lowest point along the centerline of the fill.

[3] Prior to compaction.

WISCONSIN CONSTRUCTION SPECIFICATION

300. CLAY LINER

1. SCOPE

The work shall consist of the construction of the clay liner as shown on the construction plans.

2. MATERIALS

Soils used in clay liner construction shall have a minimum plasticity index of 12 as tested by Atterberg Limit tests (ASTM D4318), a minimum percentage passing the number 200 sieve as specified on the construction plans, and a recompacted in-place permeability of 1×10^{-7} centimeters per second or less.

Clay materials shall contain no sod, brush, roots, frozen soil, or other perishable materials. Rock particles larger than 3 inches shall be removed prior to compaction of the clay.

3. FOUNDATION PREPARATION

Foundation surfaces shall be graded to remove surface irregularities and shall be scarified or otherwise acceptably scored or loosened to a minimum depth of 2 inches. The moisture content of the loosened material shall be controlled as specified for the clay liner, and the surface materials of the foundation shall be compacted and bonded with the first layer of the clay liner as specified for subsequent layers of clay liner.

4. PLACEMENT

The clay liner shall not be placed until the required foundation preparation has been completed and the foundation has been inspected and approved by the Technician or Engineer. The clay liner shall not be placed upon a frozen surface, nor shall snow, ice, or frozen material be incorporated in the clay liner.

The clay liner shall be placed in lifts. The thickness of each lift before compaction shall not exceed the smaller of 6 inches or the length of the teeth of the footed compactor used.

The distribution of materials throughout the clay liner shall be essentially uniform, and the clay liner shall be free from lenses, pockets, streaks, or layers of material differing substantially in texture, moisture content, or gradation from the surrounding material.

If the surface of any layer becomes too hard and smooth for proper bond with the succeeding layer, it shall be scarified to a depth of not less than 2 inches before the next layer is placed.

5. CONTROL OF MOISTURE CONTENT

During placement and compaction of the clay liner, the moisture content of the clay being placed shall be maintained above optimum moisture as determined by the Standard Proctor Test (ASTM D698) or Modified Proctor Test (ASTM D1557).

The application of water to the clay shall be accomplished at the borrow areas insofar as practicable. Water may be applied by sprinkling the clay after placement and before compaction of the liner, if necessary. Uniform moisture distribution shall be obtained by disking.

6. COMPACTION

The clay liner shall be compacted to a minimum of 95% of standard proctor dry density (ASTM D698) or to a minimum of 90% of modified proctor dry density (ASTM D1557), at a moisture content above optimum moisture.

The clay liner shall be compacted with a footed compactor weighing at least 25,000 pounds, operated continuously, in uncompacted lift thicknesses not to exceed the smaller of 6 inches or the length of the teeth on the footed compactor used.

7. REWORKING OR REMOVAL AND REPLACEMENT OF DEFECTIVE LINER

Clay placed at densities lower than the specified minimum density or at moisture contents lower than optimum moisture content or otherwise not conforming to the requirements of the specifications shall be reworked to meet the specifications or removed and replaced. The replacement clay and the foundation and fill surfaces upon which it is placed shall conform to all requirements of this specification for foundation preparation, approval, placement, moisture control, and compaction.

8. TESTING AND DOCUMENTATION REQUIREMENTS

Liner construction shall be tested and documented as specified below. Copies of the documentation report, including test locations and test results, shall be provided to the owner.

Field and laboratory soil tests shall be completed on the clay liner, by a third party engineering or testing firm retained by the contractor, to document compliance with this specification. Testing shall be completed as the liner is being placed. The following tests shall be completed at the specified frequency.

Standard proctor test (ASTM D698)	1 per 5,000 cubic yards of clay liner
or	
Modified Proctor Test (ASTM D1557)	1 per 5,000 cubic yards of clay liner
Field density tests ASTM D2922, or D2937, or D2167, or D1556)	1 test per 100-foot grid per 1 foot thickness of clay liner
Atterberg Limit tests (ASTM D4318)	1 per 1,500 cubic yards of clay liner
Grain size distribution (ASTM D422)	1 per 1,500 cubic yards of clay liner
Permeability (ASTM D5084)	1 per 5,000 cubic yards of clay liner (2 minimum per facility)

Atterberg limits, grain size distribution, and permeability tests shall be completed on undisturbed samples obtained from the constructed clay liner. A minimum of one of each of the laboratory tests specified above shall be completed per clay liner.

All test holes shall be backfilled using powdered bentonite mixed with clay soil used in liner construction and compacted by hand tamping. The clay shall be broken down into clods less than ½ inch in diameter. A minimum of 25% of the backfilled test hole volume shall be occupied by powdered bentonite after backfilling.

WISCONSIN CONSTRUCTION SPECIFICATION

634. Waste Transfer Pipe

1. SCOPE

The work shall consist of furnishing and installing waste transfer pipes, necessary fittings, and appurtenances as shown on the drawings.

2. MATERIALS

The pipe shall be homogeneous throughout and free from visible cracks, holes, foreign matter, or other defects. The pipe shall be as uniform in color, opacity, density, and other physical properties as is commercially practicable.

Pipes shall meet the criteria in Table 1. Pipes of equivalent strength, durability, and liquid tightness are acceptable. PVC pipe material shall be Type 1 (1120/1220) for pressure transfer systems. ABS pipe material shall be virgin plastic resin and meet ASTM D 3965. PE pipe material shall meet ASTM D 3350.

Fittings and couplers shall meet or exceed the same strength requirements as those of the pipe. Standard manufactured pieces shall be used for angles required to make direction changes.

3. HANDLING AND STORAGE

Pipe shall be delivered to the job site and handled by means which provide adequate support to the pipe and does not subject it to undue stresses or damage. When handling and placing plastic pipe, care shall be taken to prevent impact blows, abrasion damage, and gouging or cutting. All special handling requirements of the manufacturer shall be strictly observed. Special care shall be taken to avoid impact when plastic pipe must be handled at temperatures of 40°F or less.

Pipe shall be stored on a relatively flat surface so that the barrels are evenly supported. Unless the pipe is specifically coated to withstand exposure to ultraviolet radiation, it shall be covered with an opaque material when stored outdoors for a period of 15 days or longer.

4. LAYING THE PIPE

The pipe shall be laid to the lines and grades as shown on the drawings. The pipe shall be laid so that there is no reversal of grade between joints, unless otherwise shown on the drawings. The pipe shall not be dropped or dumped on the bedding or into the pipe trench. The ground surface near the pipe trench shall be free of loose rocks and stones greater than 1 inch in diameter.

Standard manufactured pieces shall be used for angles required to make direction changes. Directional pipe deflection shall be allowed in PVC and solid wall PE pipe per the manufacture's allowable bend radius.

Just before placement, each pipe section shall be inspected to ensure that all foreign material is removed from inside the pipe. The pipe ends and the couplings shall be free of foreign material when assembled. At the completion of a work shift, all open ends of the pipeline shall be temporarily closed off using a suitable cover or plug.

Care shall be taken to prevent distortion and damage to plastic pipe during unusually hot (over 90°F) or cold weather (under 40°F). After the pipe has been assembled in the trench, it shall be allowed to come within a few degrees of the ground temperature before backfilling to prevent pull out of joints due to thermal contraction.

Bell and spigot pipe should be laid with the bell pointed upstream. The pipe ends and couplings shall be free of foreign material when assembled.

The pipe shall be uniformly and continuously supported over its entire length on firm stable material. Blocking or mounding shall not be used to bring the pipe to final grade.

For pipe with bell joints, bell holes shall be excavated in the bedding material, as needed, to allow for unobstructed assembly of the joint and to permit the body of the pipe to be in contact with the bedding material throughout its length.

5. PIPE EMBEDMENT

Earth bedding – The pipe shall be firmly and uniformly placed on compacted earthfill bedding or an in-place earth material bedding of ample bearing strength to support the pipe without noticeable settlement. The earth material on which the pipe is placed shall be of uniform density to prevent differential settlement.

Unless otherwise specified, a groove that closely conforms to the outside surface of the pipe shall be formed in the bedding. The depth of the groove shall be equal to or greater than 0.3 of the pipe diameter.

Earth bedding shall be compacted to a density not less than adjacent undisturbed in-place earth material or be compacted earth backfill. Earthfill material used for compacted earth bedding shall be free of rocks or stones greater than 1 inch in diameter and earth clods greater than 2 inches in diameter. The pipe shall be loaded sufficiently during the compaction of bedding under the haunches and around the sides of the pipe to prevent displacement from its planned alignment. Pipe shall not be deformed to the extent that joint integrity is adversely impacted.

Sand, gravel, or crushed rock bedding – When sand, gravel, or crushed rock bedding is specified, the pipe shall be firmly and uniformly placed on the bedding material. Material for bedding shall not exceed 1 inch in diameter. Unless otherwise shown on the drawings, the coarse-grained bedding material shall be carefully placed and compacted to a depth equal to or greater than 0.3 of the diameter of the pipe above the bottom of the pipe. The pipe shall be loaded sufficiently during backfilling and compaction around the sides to prevent displacement of the pipe from its final approved placement.

Pipe encased in drainfill – The pipe shall be firmly and uniformly placed on bedding of specified drainfill. Drainfill shall be placed and compacted as specified in NRCS FOTG Section IV, Wisconsin Construction Specification 8, or as shown on the drawings. The pipe shall be loaded sufficiently during backfilling around the sides and during compaction to prevent displacement of the pipe.

Pipe encased in concrete – Concrete encasement shall be carefully placed to form a continuous uniform support around the entire circumference of the pipe or as shown on the drawings. Pipes encased in concrete shall be securely anchored to prevent movement of the pipe during concrete

placement. A clear distance of 1.5 inches shall be maintained between the pipe and any reinforcing steel.

6. LIQUID TIGHT PIPE PENETRATIONS

- Hydrophilic sealants (swell in contact with water) shall be non-bentonite.
- Sealant, grout, flexible connections, fitting, etc. used to seal pipe penetration joints between wall and pipe shall be liquid tight.
- Pipes shall be continuous through walls. (i.e. no pressure from pumps shall be exerted on penetration joints between wall and pipe.)
- Pipes at penetration joints shall be properly supported to prevent undue stress on the seal.
- Grouted joints shall be pinned, keyed, or otherwise attached to structure to prevent joint separation.
- Flexible connection systems shall be installed according to manufacture recommendations for the specific application.

7. BACKFILL

Initial backfill – Unless otherwise specified or shown on the drawings, initial backfill to 6 inches above the top of the conduit is required. Earth haunching and initial backfill material shall consist of soil material that is free of rocks, stones, or hard clods more than 1 inch in diameter. Coarse backfill material shall be the specified sand, gravel, crushed rock, or drainfill material.

Initial backfill shall be placed in two stages. In the first stage (haunching), backfill is placed to the center of the pipe. In the second stage, it is placed to 6 inches above the top of the pipe.

The first stage material shall be worked carefully under the haunches of the pipe to provide continuous support throughout the entire pipe length. The haunching backfill material shall be placed in layers that have a maximum thickness of about 6 inches and are compacted as shown on the drawings or as stated in the NRCS Wisconsin Construction Specification appropriate for the backfill material. During compaction operations, care shall be taken to ensure that the tamping or vibratory equipment does not come in contact with the pipe and the pipe is not deformed or displaced.

Final backfill – Final backfill shall consist of placing the remaining material required to complete the backfill from the top of the initial backfill to the ground surface, including mounding at the top of the trench. Final backfill material within 2 feet of the top of the pipe shall be free of debris or rocks larger than 3 inches nominal diameter. Coarse backfill material shall be the specified sand, gravel, crushed rock, or drainfill. Final backfill shall be placed in approximately uniform, compacted layers. Final backfill compaction and layer thickness requirements shall be as shown on the drawings or as stated in the NRCS Wisconsin Construction Specification appropriate for the backfill material.

8. PRESSURE TESTING

This pressure test procedure consists of filling, an initial expansion phase, a test phase, and depressurizing.

Severe service transfer pipe shall be pressure tested in the following manner prior to being placed into service.

Before Pressure Testing

a. Solvent welded or heat fused joints of the assembled severe service transfer pipe shall be allowed to cure. Solvent-welded joints should be allowed to cure for a minimum of 24 hours, or more time if recommended by the glue manufacturer.

b. Severe service transfer pipe shall be flushed and cleaned.

c. All thrust control structures shall be in place, and all cast-in-place thrust blocks shall be allowed to cure according to one of the following options:

   i. 3 days for early strength concrete (5,000 psi);
   ii. 7 days for normal strength concrete (3,500 psi); or
   iii. when 500 psi strength is reached, with data that's field- or lab-verified to support.

d. Pipes shall be backfilled or otherwise restrained sufficiently along its length to anchor the pipe against movement during the pressure testing. The pipe shall also be braced and/or anchored at each end to prevent movement.

e. The ends of the pipe shall be plugged, and a pressure gauge shall be attached to the upstream and downstream ends. All high points along the severe service transfer pipe shall be vented to permit the complete removal of all air within the pipe.

Filling

Slowly fill the restrained test section completely with clear water. ***WARNING – Ensure that there is no air trapped in the test section. Failure to remove entrapped air can cause explosive release resulting in death or serious bodily injury. Use equipment vents at high points to remove air.***

Initial Expansion Phase

Gradually pressurize the test section with water to the working pressure (as specified in the construction plans) plus 10 psi and maintain that pressure for three hours. During the initial expansion phase, pipe may expand slightly, requiring additional water to maintain pressure.

Test Phase

Immediately following the initial expansion phase, reduce test pressure back to working pressure, stop adding water and isolate test section. If test pressure remains steady (within 5% of the target value) for one hour, no leakage is indicated and the test section passes.

Depressurizing

Following the test phase, and prior to putting the pipe into service, gradually reduce pressure on the test section, drain out and properly dispose of all test water.

Table 1
Pipe Specifications [Note 1,2]

Installation Type	Size	Material	Specification	Joint Specs	Fitting Spec. [Note 3]
GRAVITY PIPELINES (Including Abrasive Materials)	(4"-10")	HDPE Pipe	AASHTO M252, Type S	ASTM D 3212 / ASTM 2657	AASHTO M252
	(12"-48")	HDPE Pipe	AASHTO M294, Type S	ASTM D 3212 / ASTM 2657	AASHTO M294
	(8"-24")	HDPE Pipe	ASTM F 667	ASTM D 3212 / ASTM 2657	ASTM F 667
	(18"-48")	PVC Pipe	ASTM F 679	ASTM D 3212, & D 3139 & D 2672	ASTM F 679
	(3"-15")	PVC Pipe	ASTM D 3034 (SDR 35)	ASTM D 3212, & D 3139 & D 2672	ASTM D 3034
	(1/8"-36")	PVC Pipe	ASTM D 2241 (SDR 32.5)	ASTM D 3212, & D 3139 & D 2672	ASTM D 2241
	Any pipe listed below is also acceptable.				
PRESSURE PIPELINES • < 70 psi max. working pressure • Non-Abrasive Materials	(1/8"-24")	PVC Pipe	ASTM D 1785 (Sch. 40)	ASTM D 3212, & D 3139 & D 2672	ASTM D 2464 & D 2466
	(1/8"-36")	PVC Pipe	ASTM D 2241 (SDR 26)	ASTM D 3212, & D 3139 & D 2672	ASTM D 2467
	(4"-12")	PVC Pipe	AWWA C900 (DR 25)	ASTM D 3212, & D 3139 & D 2672	Per manufacturer recommendation
	(14"-48")	PVC Pipe	AWWA C905 (DR 25)	ASTM D 3212, & D 3139 & D 2672	Per manufacturer recommendation
	(3.5"-54")	PE Pipe	ASTM F 714 (DR 17)	Per manufacturer recommendation / ASTM D 3261 / ASTM D 2657	ASTM D 2683
	(1/8"-42")	Steel	ASTM A 53 / ANSI/ASME B36.10 (Sch. 40)	Flanged: to ANSI B16.5 Threaded: to ANSI B 16.11 Butt-Weld	Flanged: to ANSI B16.1 Thread to ANSI B16.11 Butt-Weld
	Any pipe listed below is also acceptable.				
PRESSURE PIPELINES [Note 4] • ≥ 70 psi max. working pressure • Abrasive Materials • Recirculation Systems	(1/8"-24")	PVC Pipe	ASTM D 1785 (Sch. 80)	ASTM D 3212, & D 3139 & D 2672	ASTM D 2467
	(1/8"-36")	PVC Pipe	ASTM D 2241 (SDR 21)	ASTM D 3212, & D 3139 & D 2672	ASTM D 2467
	(1/8"-36")	PVC Pipe	ASTM D 2241 (SDR 17)	ASTM D 3212, & D 3139 & D 2672	ASTM D 2467
	(4"-12")	PVC Pipe	AWWA C900 (DR 18)	ASTM D 3212, & D 3139 & D 2672	Per manufacturer recommendation.
	(14"-48")	PVC Pipe	AWWA C905 (DR 18)	ASTM D 3212, & D 3139 & D 2672	Per manufacturer recommendation
	(3.5"-54")	PE Pipe	ASTM F 714 (DR 11)	Per manufacturer recommendation / ASTM D 3261 / ASTM D 2657	ASTM D 2683
	(1/8"-42")	Steel	ASTM A 53 / ANSI/ASME B36.10 / 19 (Sch. 80)	Flanged: to ANSI B16.5 Threaded: to ANSI B 16.11 Butt-Weld	Flanged: to ANSI B16.1 Thread to ANSI B16.11 Butt-Weld
	(3"-64")	Ductile Iron	ASTM A746 / AWWA C150 / C151	AWWA C111 / C115	AWWA C110 or AWWA C153

[Note 1] Pipe, joints, and fittings must meet the designed maximum operating pressure (for both daily use and during cleanout.)
[Note 2] PVC pipe material shall be Type 1 (1120/1220) for pressure pipelines
[Note 3] Other joints and metal/cast fittings may be used if pressure rating of fitting is equal to, or greater than, pressure rating of pipe used.
[Note 4] Use thicker walled pipes when waste contains abrasive material (i.e. sand) that may cause the pipe to wear (erode), or when pump operates at higher velocities.

Pipes and Fittings that Meet Wisconsin Construction Specification 634-Waste Transfer Pipes

ASTM/AWWA/ AASHTO	Description
ASTM A 53	Standard Specification for Pipe, Steel, Black and Hot-Dipped, Zinc-Coated, Welded and Seamless
ASTM C 76	Standard Specification for Reinforced Concrete Culvert, Storm Drain, and Sewer Pipe
ASTM C 478	Standard Specification for Reinforced Concrete Manhole Sections
ASTM C 1227	Standard Specification for Precast Concrete Septic Tanks
ASTM D 1785	Standard Specification for Poly(Vinyl Chloride) (PVC) Plastic Pipe, Schedules 40, 80, and 120
ASTM D 2241	Standard Specification for Poly(Vinyl Chloride) (PVC) Pressure-Rated Pipe (SDR Series)
ASTM D2282	Standard Specification for Acrylonitrile-Butadiene-Styrene (ABS) Plastic Pipe (SDR-PR)
ASTM D 2321	Standard Practice for Underground Installation of Thermoplastic Pipe for Sewers and Other Gravity-Flow Applications
ASTM D 2412	Standard Test Method for Determination of External Loading Characteristics of Plastic Pipe by Parallel-Plate Loading
ASTM D 2464	Standard Specification for Threaded Poly(Vinyl Chloride) (PVC) Plastic Pipe Fittings, Schedule 80
ASTM D 2466	Standard Specification for Poly(Vinyl Chloride) (PVC) Plastic Pipe Fittings, Schedule 40
ASTM D 2467	Standard Specification for Poly(Vinyl Chloride) (PVC) Plastic Pipe Fittings, Schedule 80
ASTM D 2564	Standard Specification for Solvent Cements for Poly(Vinyl Chloride) (PVC) Plastic Piping Systems
ASTM D 2657	Standard Practice for Heat Fusion Joining of Polyolefin Pipe and Fittings
ASTM D 2661	Standard Specification for Acrylonitrile-Butadiene-Styrene (ABS) Schedule 40 Plastic Drain, Waste, and Vent Pipe and Fittings
ASTM D 2672	Standard Specification for Joints for IPS PVC Using Solvent Cement
ASTM D 2683	Standard Specification for Socket-Type Polyethylene Fittings for Outside Diameter-Controlled Polyethylene Pipe and Tubing
ASTM D 2729	Standard Specification for Poly(Vinyl Chloride) (PVC) Sewer Pipe and Fittings
ASTM D 2774	Standard Practice for Underground Installation of Thermoplastic Pressure Piping
ASTM D 3034	Standard Specification for Type PSM Poly(Vinyl Chloride) (PVC) Sewer Pipe and Fittings
ASTM D 3139	Standard Specification for Joints for Plastic Pressure Pipes Using Flexible Elastomeric Seals
ASTM D 3212	Standard Specification for Joints for Drain and Sewer Plastic Pipes Using Flexible Elastomeric Seals
ASTM D 3261	Standard Specification for Butt Heat Fusion Polyethylene (PE) Plastic Fittings for Polyethylene (PE) Plastic Pipe and Tubing
ASTM D 3350	Standard Specification for Polyethylene Plastics Pipe and Fittings Materials
ASTM D 3965	Specification for Rigid Acrylonitrile-Butadiene-Styrene (ABS) Materials for Pipe and Fittings
ASTM F 412	Standard Terminology Relating to Plastic Piping Systems

ASTM F 477	Standard Specification for Elastomeric Seals (Gaskets) for Joining Plastic Pipe
ASTM F 480	Standard Specification for Thermoplastic Well Casing Pipe and Couplings Made in Standard Dimension Ratios (SDR), SCH 40 and SCH 80
ASTM F 667	Standard Specification for Large Diameter Corrugated Polyethylene Pipe and Fittings
ASTM F 679	Standard Specification for Poly(Vinyl Chloride) (PVC) Large-Diameter Plastic Gravity Sewer Pipe and Fittings
ASTM F 714	Standard Specification for Polyethylene (PE) Plastic Pipe (SDR-PR) Based on Outside Diameter
ASTM F 1417	Standard Test Method for Installation Acceptance of Plastic Gravity Sewer Lines Using Low-Pressure Air
ASTM F 1760	Standard Specification for Coextruded Poly(Vinyl Chloride) (PVC) Non-Pressure Plastic Pipe Having Reprocessed-Recycled Content
ASTM F 1668	Standard Guide for Construction Procedures for Buried Plastic Pipe
ASTM F 2306	Standard Specification for 12 to 60 in. [300 to 1500 mm] Annular Corrugated Profile-Wall Polyethylene (PE) Pipe and Fittings for Gravity-Flow Storm Sewer and Subsurface Drainage Applications
ASTM F 2487	Standard Practice for Infiltration and Exfiltration Acceptance Testing of Installed Corrugated High Density Polyethylene Pipelines
ASTM F 2736	Standard Specification for 6 to 30 in. (152 To 762 mm) Polypropylene (PP) Corrugated Single Wall Pipe And Double Wall Pipe
ASTM F 2764	Standard Specification for 30 to 60 in. [750 to 1500 mm] Polypropylene (PP) Triple Wall Pipe and Fittings for Non-Pressure Sanitary Sewer Applications
AASHTO M252	Standard Specification for Corrugated Polyethylene Drainage Pipe
AASHTO M294	Standard Specification for Corrugated Polyethylene Pipe, 300- to 1500-mm Diameter
AASHTO M306	Standard Specification for Drainage, Sewer, Utility, and Related Castings
AWWA C110	AWWA Standard for Ductile-Iron and Gray-Iron Fittings
AWWA C111	Rubber-Gasket Joints for Ductile-Iron Pressure Pipe and Fittings
AWWA C115	Standard for Flanged Ductile-Iron Pipe With Threaded Flanges
AWWA C150	American National Standard for Thickness Design of Ductile-Iron Pipe
AWWA C151	AWWA Standard for Ductile-Iron Pipe, Centrifugally Cast
AWWA C153	American National Standard for Ductile-Iron Compact Fittings for Water Service
AWWA C200	Steel Water pipe - 6 Inch and Larger
AWWA C605	Underground Installation of Polyvinyl Chloride (PVC) Pressure Pipe and Fittings for Water
AWWA C900	AWWA Standard for Polyvinyl Chloride (PVC) Pressure Pipe and Fabricated Fittings, 4 In. Through 12 In. (100 mm Through 300 mm), for Water Transmission and Distribution
AWWA C905	AWWA Standard for Polyvinyl Chloride (PVC) Pressure Pipe and Fabricated Fittings, 14 In. Through 48 In. (350 mm Through 1,200 mm), for Water Transmission and Distribution
AWWA C909	AWWA Standard for Molecularly Oriented Polyvinyl Chloride (PVCO) Pressure Pipe, 4 In. Through 24 In. (100 mm Through 600 mm), for Water, Wastewater, and Reclaimed Water Service

Pipes and Fittings that DO NOT meet Wisconsin Construction Specification 634-Waste Transfer Pipes

ASTM/AWWA/ AASHTO	Description
ASTM C 425	Standard Specification for Compression Joints for Vitrified Clay Pipe and Fittings
ASTM C 700	Standard Specification for Vitrified Clay Pipe, Extra Strength, Standard Strength, and Perforated
ASTM C 877	Standard Specification for External Sealing Bands for Concrete Pipe, Manholes, and Precast Box Sections
ASTM C 1244	Standard Test Method for Concrete Sewer Manholes by the Negative Air Pressure (Vacuum) Test Prior to Backfill
ASTM D 2665	Standard Specification for Poly(Vinyl Chloride) (PVC) Plastic Drain, Waste, and Vent Pipe and Fittings
ASTM D 2680	Standard Specification for Acrylonitrile-Butadiene-Styrene (ABS) and Poly (Vinyl Chloride) (PVC) Composite Sewer
ASTM F 628	Standard Specification for Acrylonitrile-Butadiene-Styrene (ABS) Schedule 40 Plastic Drain, Waste, and Vent Pipe With a Cellular Core
ASTM F 891	Standard Specification for Coextruded Poly(Vinyl Chloride) (PVC) Plastic Pipe With a Cellular Core
ASTM F 949	Standard Specification for Poly(Vinyl Chloride) (PVC) Corrugated Sewer Pipe With a Smooth Interior and Fittings
ASTM F 1803	Standard Specification for Poly (Vinyl Chloride)(PVC) Closed Profile Gravity Pipe and Fittings Based on Controlled Inside Diameter
ASTM F 1866	Standard Specification for Poly (Vinyl Chloride) (PVC) Plastic Schedule 40 Drainage and DWV Fabricated Fittings
ASTM F 2648	Standard Specification for 2 to 60 inch [50 to 1500 mm] Annular Corrugated Profile Wall Polyethylene (PE) Pipe and Fittings for Land Drainage Applications

DESIGN REPORT

GOLDEN SANDS DAIRY
FACILITY DEVELOPMET PLAN

January 2014

PREPARED FOR:

Jim Wysocki
P.O. Box 330
Bancroft, WI54921

PREPARED BY:

Resource Engineering Associates, Inc.
3510 Parmenter St., Suite 100
Middleton, Wisconsin, 53562

Table of Contents

1. Project Contacts 3
2. Purpose 4
3. Background 4
4. Management Assessment 5
5. Site Assessment 7
6. Manure and Wastewater Generation 9
7. Design 9
7.1. Feed Storage Area 9
7.2. Feed Storage Area Runoff Collection Basin 10
7.3. Separation Building 10
7.4. Separated Solids & Sand Stacking Pad 10
7.5. Soaker Water Tanks 11
7.6. Holding Area Tank 12
7.7. Waste Storage Facilities 13
7.8. Waste Pump Station 13
8. Failure Analysis 14
9. Operation and Maintenance Plan 14
10. Construction Plans and Specifications 15
11. Construction Schedule 15
12. Construction Quality Assurance Plan 15

Appendix A – Site Maps
Appendix B – Soils and Groundwater Data
Appendix C – Manure and Wastewater Generation and Storage Calculations
Appendix D – Stormwater Design Calculations
Appendix E – Pipelines and Pump Station Information and Calculations
Appendix F – NRCS Conservation Practice Standards

WISCONSIN PROFESSIONAL ENGINEER ROBERT J. POFAHL E-15298 MIDDLETON WI

I, Robert Pofahl, hereby certify that I am a registered professional engineer in the State of Wisconsin, registered in accordance with the requirements of ch. A-E, Wis. Adm. Code; that this document has and been prepared in accordance with the Rules of Professional Conduct in ch. A-E 8, Wis. Adm. Code; that to the best of my knowledge, all information contained in this document is correct. 2-4-14

Robert J. Pofahl P.E.

1. Project Contacts

Owner Contact

Jim Wysocki - Operator
P.O. Box 330
Bancroft, WI 54921
Phone: (715) 335-8060
Fax: (715) 335-8061
Email: jim.wysocki@rpespud.com

DNR Regional Contact

Robert Rohland
910 Highway 54 E
Black River Falls WI, 54615
Phone: (715) 284-1429
robert.rohland@wisconsin.gov

DNR CAFO Permit #:

County Animal Waste Contact

Shane Wucherpfennig
Engineering Technician– Wood County LCD
400 Market St
Wisconsin Rapids, WI 54495
Phone: (715) 421-8475

Resource Engineering Associates, Inc. Contacts

Robert Pofahl, PE
3510 Parmenter Street, Suite 100
Middleton, WI 53562
Phone: 608-831-5522 x13
Fax: 608-831-6564
Email: bob@reaeng.com

Site Location

Wood County, Wisconsin
Town of Saratoga (T 21N, R 6E)
SW1/4 of SE1/4, SE1/4 of SW1/4, and eastern half of SW1/4 of SW1/4 of Section 20

2. Purpose

The purpose of providing this report is to provide information on the design of the proposed structures and conformance with WI NRCS conservation practice standards, specifications and NR 243 codes if applicable. Reviewable Structures Include:

(2) free-stall barns (98' x 1,553')
Dry cow barn (113' x 420')
Special needs barn (98' x 428')
Milking parlor and holding area (92' x 370')
650' x 650' concrete pad for silage
120' x 650' asphalt hay storage pad
260' x 100' concrete pad and commodity building
90' x 176' Separation building
300' x 400' concrete separated solids and sand stacking pad
200' x 200' calf hutch area
(2) 6,600,000 gallon concrete liquid manure storage basin (114.25' x 270' bottom)
26,900,000 gallon concrete liquid manure storage basin (300.2' x 260' bottom)
(2) concrete clean sand staking pads (40' x 50')
(6) Concrete tanks for soaker water collection
Concrete tank for feed storage pad runoff collection
Scale station
Two wells

Prior to construction, Wisconsin agencies with permit approval/design review included:

DNR CAFO Reviewable Structures Plan Approval
DNR NOI
County Manure Storage

3. Background

The proposed facility is a new operation that will integrate dairy into irrigated potato and vegetable production cropland. This proposal is environmentally–sized to allow for advanced manure handling and nutrient recycling systems. The facility is modeled after the Central Sands Dairy in Juneau County.

Dairy crop production will enhance the sustainable farming methods of traditional potato production systems. The practices will reduce wind erosion by utilizing limited tillage practices on the field corn silage crops and having multiple years in alfalfa production in each rotation.

Reduced nutrient leaching will be attained by harvesting forages and using the recycled organic nutrients from the cow manure in the following crop years, greatly reducing the amount of commercial fertilizer applied each year. The combination of forage crops and the application of recycled nutrients will increase the soil's organic matter. Runoff, while not a significant issue on these sandy soils, will be virtually non-existent due to the amount of surface residue and soil conditioning during forage production years.

Pesticide use will be decreased due to longer rotations between potato crops and improved soil health, which allows integrated pest management systems to lower the insect and disease pressures. In addition, forage crops generally utilize fewer pesticides than vegetable canning crops.

Upon installation of the digester electrical generators will produce electricity to power 1,400 homes as a "green power" source.

4. Management Assessment

The management assessment was performed with the owner/operator to explore options and to determine the purpose of storage components, available resources, manure disposal schemes, sand and manure solids separation methods, and waste characteristics.

Waste Characterization

The proposed dairy will have 3,400 milk cows, 600 dry cows, 300 heifers and 1,000 calves. Bedding for cows is planned to be sand. The manure from the animals, except the calves, will enter a sand separator prior to entering a digester (Phase II). The bedded calf manure will be land spread when the pens are cleaned or stored on the manure solids pad. Digested manure solids will be separated with mechanical separators and the liquid portion of the manure will be stored in the proposed waste storage facilities. Separated manure solids will be accumulated and stacked on a concrete stacking pad prior to land application. The liquid manure in the waste storages will be land applied to cropland to be developed adjacent to the dairy. Separated solids will be spread and incorporated by tillage. Manure application will be based on crop nutrient needs. The nutrient management plan is being completed by Frase Crop Consulting.

Wastewater consists of parlor water, soaker water, silage leachate and runoff from the solids stacking pad and feed storage area.

Manure and waste water calculations and manure basin sizing is presented in the spreadsheet presented in Appendix C.

Dairy is proposing housing:

Animals	Number	Eq. Factor	Animal Units
Milking	3400	1.4	4760
Dry	600	1.4	840
Heifers (800-1200 lbs)	300	1.1	330
Heifers (400-800 lbs)		0.6	0
Calves	1000	0.2	200
		Total	6130

Land base

The farm has approximately 6,460 acres of cropland owned, rented or in a land spreading agreement available to apply nutrients.

Proposed storage period

The planned storage period is 270 days for liquid manure. The days of storage provided are discussed in the Design section of this report.

Waste handling and transfer

Waste from the planned barns will be vacuumed by tankers and hauled to the processing building. Six concrete transfer tanks are designed to collect soaker water that will be pumped to the sand separator collection tank. Wastewater from the parlor will be pumped to the sand separator tank. Separated sand will be piled on a concrete separation pad for reuse or land application.

Once Phase II is implemented, manure from the sand separator will go through an anaerobic digester. Solids from the digested manure will be separated using mechanical separators. The solid portion will be temporarily stored on a contained concrete pad and the liquid portion will be pumped to a storage basin. Manure will be field applied in accordance with a nutrient management plan prepared by others.

Facility removal methods

Liquid manure will be pumped from the waste storage facilities will be land applied. Separated solid manure will be land applied. Land application will be in accordance with the nutrient management plan.

Access needs

Manure will generally be removed by pumping over the walls or embankments of manure storages. Access to the main manure storage basin will be from a concrete ramp, but access is expected to be infrequent due to use of the sand separator, digester and solids separator. The basin is to be fenced to limit access by cattle and for safety for workers and visitors. Other storages will have safety railings installed as per owner's direction.

Labor and equipment

The farm will employ laborers and purchase vacuum tank scrapers to collect manure and agitation and pumping equipment to empty storage basins.

Potential odors

The site is located over a ¼ mile from the nearest property owner or house. State Highway 13 forms the east boundary of the Dairy; a 200 foot setback from the east end of the barns is included in the design.

As cows to stock the barn are initially brought in, the manure will be stored in the manure basin. The solids will be removed and land spread during the growing season. The separated liquid will be applied per the nutrient management plan.

The construction of the digester is considered "Phase II" of construction, and the timetable will depend on when the essential reviewable facilities ("Phase I") construction is completed. The digester will be installed after the buildings and reviewable facilities are completed to ensure that the digester is efficiently sized and fully integrated to the manure handling, electrical and building heating infrastructure. The digester is planned to be operational at the time the facility is populated with animals.

Facility expansion

Expansion is not being considered at this time.

5. Site Assessment

The site assessment was performed to determine physical site characteristics that will influence the placement, construction, maintenance, and environmental integrity of proposed structures.

Topography

The existing site topography and parcel lines are presented on the Existing Conditions page of the plan set. Topography and parcel lines are from Wood County GIS.

The site drawing is in Wood County Wisconsin Coordinate Reference System and NAVD88.

Soils Investigation

Test soil borings were extended to bedrock, a free water surface, or to a depth to show subsurface saturation and bedrock separation distances required in the NRCS standards are achieved.

The soils investigations were completed on 5/9/12, 5/10/12, 7/16/12, and 5/20-5/22/13 using a geo probe and hand auger and logged by REA personnel.

Soil observations on site generally indicated the following:

- 0-0.5 feet, topsoil- Sand, dark brown, composed of roots, grass & tree residue;
- 0.5 -24 feet, poorly graded sand, some small gravel intermixed periodically.

A Soil Survey map, soil logs and test results are presented in Appendix B.

Bedrock

Bedrock was not encountered in the test borings.

A soil investigation summary is presented in Appendix B. This summary lists the borings and summarizes their number, and elevations.

Saturation

Watertable was encountered at an elevation ranging from 21.5 to 27 feet below grade. This corresponds to elevations ranging from 975.93 to 983.4. The higher groundwater elevations were generally near the east side and the lower elevations were generally to the west.

A soil investigation summary is presented in Appendix B. This summary lists the borings and summarizes their number, elevations and separation requirements for the specific individual waste handling structures.

Well Construction Reports were obtained from the Wisconsin Geological and Natural History Survey for Wood County. The closest well reports are from Section 20 and 29 T21N R6E which is north and south of the proposed dairy site. The well logs list the depth from surface to normal water level ranging from 19-33 feet. One log (Well HO099) lists the depth to water as 12 feet but this appeared to be in a perched or confined lens, as depth dropped substantially during pumping, and the well is located near another well (UD547) with a lower water elevation.

A Water Table Elevation Map for Irrigable Lands Inventory (1981) also by the Wisconsin Geological and Natural History Survey shows the water table in the site area at elevations between 980 and 990, with a gradient to the west,

southwest. The general surface elevation on the site ranges from 1009 to 1004 MSL; this suggests groundwater is 19 to 24 feet below the ground surface. Although slightly lower in elevation, this data is consistent with the field data.

A groundwater study by S.S. Papadopulos & Associates, Inc. modeled groundwater base conditions for the proposed production area and crop fields. The model shows a depth to groundwater ranging 16 to 23 feet in the fields surrounding the production area. Data for field 15 which is near the site is consistent with field data collected. In discussion with Robert Nauta, hydrologist for the project, he believed the field data presented in the soil borings represented a reliable groundwater level for the area.

The well logs, water table elevation map, and groundwater model appear to be consistent with groundwater elevations found in the soil borings. These elevations were originally used for design separations for reviewable structures, and were believed to be a conservative assessment of high groundwater levels based on originally using a two foot factor of safety, and defining one site ground water level of 981.0.

Based on DNR's letter correspondence, they suggest a high ground water elevation of 985 for design purposes to account for watertable fluctuation. While we believe the groundwater elevations of the soil borings and the original ground water level of 981.0 for the manure storage area is consistent with the data referenced above we are using DNR's ground water elevation of 985 for design separation to saturation as an extra conservative estimate.

Borrow Areas

Borrow for buildings and basins will come from the construction of on-site excavation of waste storages and stormwater areas.

Clay borrow for secondary liners will come from off site. Proposed borrow test results are presented in Appendix B. Before placement of borrow material, additional samples will be evaluated.

Wells

The site does not have existing potable wells. Two proposed wells are planned to be located west of the proposed parlor and approximately 1,600 feet from the proposed waste storage facilities.

Wetlands

The WDNR Surface Water Viewer's Wetland Map did not show the presence of mapped wetlands in the project area.

Floodplain

The WDNR Surface Water Viewer's Floodplain Map did not show the presence of mapped floodplains in the project area.

Drain tiles

Drain tiles are not believed to be on the site. The project site is in a forest plantation and drain tiles are not believed to be in the area.

Karst features

Sinkholes or karst features are not believed to be on the site. The area is not known to have karst features.

Surface Water features

Sevenmile Creek is more than a mile north of the site and Tenmile Creek is more than a mile south of the site.

Site maps are presented in Appendix A. Included are the following maps with site area delineated:

- Site Location Map
- Site USGS Quad Map
- Site USDA Soils Map
- Site DNR Water Viewer Wetlands Map
- Site DNR Water Viewer Floodplain Map

6. Manure and Wastewater Generation

The manure at the farm will be handled separately as a liquid and solid. The estimated quantity of manure and wastewater to be produced and collected annually on the farm is 54,922,629 gallons of liquid manure and 24,840 tons of separated solid manure.

Wastewater accounted for in the manure production calculation includes:

Parlor water (7.65 gal/cow/day)
Silage leachate (0.5 cuft/ton)*40,000 tons/yr = 20,000 cuft/yr = 149,600 gal/yr
Runoff collected from the feed storage pad (422,500 sqft)
Runoff collected from solid stacking pad (120,000 sqft)
Runoff collected from the barn work pads (28,348sqft.)
Soaker Water Collection 5,926,500 gal/yr

Manure generation and waste storage calculations are presented in Appendix C.

7. Design

The purpose of this section is to discuss designs and the applicable standards used as the basis of design.

7.1. Feed Storage Area

A silage feed storage pad is planned to be built east of the proposed liquid manure storage basin. The facility plans to store silage in three to five piles on the pad. Silage may produce leachate which generally contains nitrogen, phosphorus, BOD, and ammonia. Silage will be covered with plastic, which will divert precipitation reducing the amount of potential leachate.

The feed storage area is 422,500 ft^2 in size. The feed storage area slopes to the west to a runoff collection basin. The feed storage pad is included in the runoff area of the waste storage spreadsheet.

The silage is intended to be stored at low moisture content, typically in the range of 30-35 percent solids. The leachate volume was calculated for the largest harvest anticipated (corn silage) as per the owner. The calculation is as follows:

Weight of stored feed = 32,000 to 40,000 tons per year
Leachate volume = 40,000 tons * 0.5 ft^3/ton * 7.48 gal/ ft^3 = 149,600 gallons

The feed storage pad is planned to be concrete with waterstop design.

Grading around the feed storage is designed for working access and to divert runoff away from the feed storage.

The feed storage area was designed in accordance with NRCS 629, NRCS 313 and ACI 360R-92.

7.2. Feed Storage Area Runoff Collection Basin

The feed storage area has a concrete collection basin that will collect leachate and runoff from the feed storage area. Leachate and runoff will enter the basin through two grated openings in the basin to limit solids in the basin.

The basin is planned to be concrete with waterstop with a 6:1 concrete ramp for access (occasional access is anticipated to remove solids). The basin will handle runoff from the 25yr 24hr storm event, with 1' of freeboard. The 100yr 24hr storm will fill the basin and back up into the solids pad until pumps remove the water.

The two pumps will be installed to pump the collected runoff. The pump will have a float to pump the collected liquids. The pumps will discharge through PVC pipes to the waste storage facility. Runoff and pump calculations are presented in Appendix E.

The pumps are contained in wet wells to accommodate cold weather. Provision will need to be provided by the owner for operation in cold weather.

The collection basin was designed in accordance with NRCS 313 and NRCS 634.

7.3. Separation Building

The separation building consists of several concrete tanks to collect and process manure and wastewater from the dairy. Manure and wastewater are delivered to the building by pumps and pipelines from collection tanks around the barns and from vacuum tankers that remove waste from the barns. The separation building will have mechanical sand separators to remove and recycle sand for bedding from the manure. After the sand is separated the manure solids will be separated with mechanical separators. The liquids will be pumped from the separation building to waste storage and the separated sand and solids will be stored on the separated sand and solids stacking pad.

Once a digester design is selected and constructed manure will be pumped to the digester after sand has been separated. After digestion, manure will enter a solid separator to separate the solids from the liquid portion to more economically handle land application of the manure.

The tanks in the separation building are to be concrete with waterstop.

The tanks were designed in accordance with NRCS 313 and NRCS 634.

7.4. Separated Solids & Sand Stacking Pad

Reclaimed sand will be stored on a concrete stacking pad until it is able to be reused or field applied. After digestion separated solids will be stacked on the concrete stacking pad until it is field applied.

The separated solids and sand storage pad is planned to be built west of the proposed separation building. Separated solids and sand will be stored in separate piles on the pad. The storage area is 120,000 ft^2 in size and has walls on the west half. The storage area slopes to the east to a runoff collection basin. The stacking pad area is included in the runoff area of the waste storage spreadsheet.

The stacking pad is planned to be concrete with waterstop.

Grading around the stacking pad is designed for working access and to divert runoff away from the storage.

The storage area was designed in accordance with NRCS 629 and NRCS 313.

The dairy estimates sand use will be about 50 lbs/cow/day (110lb/ft^3) or 0.45 ft^3/cow/day.

Half the pad will be used for separated sand and half the pad will be used for separated solids. Calculations by REA indicate the pad would provide approximately 116 days of sand storage. Calculations by REA indicate the pad would provide approximately 153 days of solid storage. Storage calculations are in Appendix C.

If the separated sand pad becomes full and sand cannot be reused or field applied, sand will be stacked on the silage pad (runoff is collected from the pad).

The separated solids pad will collect and direct runoff to the separation building. Runoff will be pumped from the separation building to the waste storage facility. The collection system is designed to collect and hold runoff from the separated solids pad up to a hundred year rainfall (5.8 inches) on the separated solids pad until it can be pumped to waste storage.

7.5. Soaker Water Tanks

During the summer months the dairy plans to utilize soakers to keep the cows cool. Soaker water that does not evaporate or is not absorbed by solids in the alleys will flow toward the ends of the barns where liquids will drain into a reception trench located in an outside work pad. The work pad and trench will collect soaker water as well as manure that may be tracked out of the barn. The trench will flow to a concrete tank where it will be pumped to the separation building. There will be six of these basins; one at each end of the barns.

These tanks and trenches will be concrete with waterstop. The tanks inside dimension will be 10’ x 12’ x 8’. Waste is planned to be pumped from the tanks to the separation building. Each tank will have a check valve between the tank and the collection line to protect against backflow.

The dairy plans to operate the soakers when the temperature is above 70 degrees. If the soakers are on May through September the historical average for those months have 125 days where the temperature is above 70 degrees. If the soakers run half the time these days they will generate 47,412 gal/day.

Rainfall from the working pads outside the barns will also be collected. Six pads totaling about 28,348 ft^2, the rainfall runoff from these pads. The work pads are included in the runoff area of the waste storage spreadsheet.

The tanks were designed in accordance with NRCS 313 and NRCS 634.

Soaker water calculation

Freestall Barn
Soaker line length for freestall barns = 1,515 ft
Soaker spacing = 8 ft
Cycle = 2 min. on - 6 min. off
Nozzle flow rate = 0.6 gal/min
4 rows of nozzles (for two barns)

1,515 ft /8 ft x 4 rows = 756 nozzles
2 min. on /8 min. off x 12 hr/day = 3 hrs/day (running)
0.6 g/min*60 min/hr*3 hrs/day*756 nozzles = 81,648 gal/day

Special Needs Barn (no soakers in dry cow barn)
Soaker line length for special needs barn = 490 ft
Nozzle spacing = 8 ft
Cycle = 2 min on- 6 min off
Nozzle flow rate = 0.6 gal/min

490 ft /8 ft x 2 (alleys) = 122 nozzles (in barn)
2 min. on /8 min x 12 hr/day = 3 hrs/day (running)
0.6 g/min x 60 min/hr*3 hrs/day x 122 nozzles = 13,176 gal/day

The WI NRCS wastewater spreadsheet indicates that half (50%) of the water used for soakers goes to storage. The balance would evaporate (therefore water to be stored is calculated by multiplying by 0.5).

81,648 gal/day
+13,176 gal/day
94,824 gal/day (total applied) 94,824 gpd x 0.5 (collected ratio) = 47,412 gal/day

The soakers are estimated (by past experience) to operate about 125 days per season.
47,412 gal/day * 125 days = 5,926,500 gallons per season

Soaker water is included in the manure storage calculation spread sheet as part of the waste water number.

7.6. Holding Area Tank

The holding area tank will receive parlor water. The parlor water will be collected and used to flush the holding area. The flush water will be collected in a PE pipe set in the holding area floor that drains back to the holding tank.

The holding tank will have two pumps, one used to flush the holding area and the other to pump waste and parlor water to the separation building. The pumps will have a check valve and an air relief valve between the tank and the collection line to protect against backflow.

The holding area tank will be concrete with waterstop. The tanks inside dimension will be 25’ x 25’ x 15’. Waste is planned to be pumped from the tanks to the separation building.

The holding area tank was designed in accordance with NRCS 313 and NRCS 634.

7.7. Waste Storage Facilities

Waste Storage Facility #1 & #2

Waste Storage Facility #1 and #2 (WSF1) and (WSF2) are designed to have sloped-side walls and a concrete liner with waterstop and an 8" secondary clay liner. The storage top dimensions are 370' x 214' and are 20' deep. Each storage facility will have an 8:1 15' wide ramp. The inner side wall slopes are 2.5:1 to accommodate concrete placement and the outer slopes were set at 3:1 to accommodate mowing. The berm top width is 20' to accommodate vehicle traffic.

The maximum operating level (MOL) is elevation = 1007 feet giving a one foot of freeboard and storage for a 25 yr, 24 hr rainfall event and runoff from the collected areas. WSF1 and WSF2 each have a capacity of 6,633,351 gallons at MOL.

Waste will be pumped to WSF1 from the separation building, the feed storage collection basin, and the separated solids stacking pad. Waste in WSF1 will flow to WSF2 through two 12" PVC pipes connecting the basins. A concrete overflow between WSF1 and WSF2 will be provided in case that the pipes were to plug.

WSF2 will be pumped to WSF3 by a manhole pump station.

WSF1 and WSF2 will be emptied by backing a pump down the agitation ramp.

WSF1 and WSF2 were designed in accordance with NRCS 313.

Waste Storage Facility #3

Waste Storage Facility #3 (WSF3) is to have sloped-side walls and a concrete liner with waterstop and an 8" secondary clay liner. The storage top dimensions are 370' x 214' and the storage is 30' deep. The storage will have two 8:1 15' wide ramps. The inner side wall slopes are 2.5:1 to accommodate concrete placement and the outer slopes were set at 3:1 to accommodate mowing. The berm top width is 20' to accommodate vehicle traffic.

The maximum operating level (MOL) is elevation = 1017.6 feet giving a one foot of freeboard and storage for a 25 yr, 24 hr rainfall event. WSF3 has a capacity of 26,936,920 gallons at MOL.

Waste will be pumped to WSF3 from WSF2 by a manhole pump station.

WSF3 will be emptied by backing a pump down the agitation ramp.

WSF3 was designed in accordance with NRCS 313 'Concrete with Waterstop'.

7.8. Waste Pump Station

The pump station to pump waste from WSF2 to WSF3 will consist of a PVC pipe to a manhole located between WSF2 and WSF3. Two pumps will be in the manhole to serve as a primary low flow and backup high flow. The pumps will discharge through PVC piping to WSF3.

The pump station was designed in accordance with NRCS 634.

8. Failure Analysis

The purpose of this section is to discuss structures and potential impacts from failure of embankments, liners, or structures.

Feed Storage Collection Basin Pump Failure

Potential failure of the collection basin pump will back up runoff into the feed storage area. If the runoff continues the collection basin would overflow to areas surrounding the collection basin area. Alternatively waste could be hauled from the collection basin or pumped to waste storage using portable pumping equipment used to empty the waste storages.

Separated Solids & Sand Stacking Pad Pump Failure

Potential failure of the collection basin pump will back up runoff into the stacking pad. If the runoff continues the collection basin would overflow to areas surrounding the collection basin area. Alternatively waste could be hauled from the separation building or pumped to waste storage using portable pumping equipment.

Soaker Water Tank Pump Failure

Potential failure of the soaker water tank pumps will back up soaker water into the freestall barn working pads. If the soaker water continues the tank would overflow to areas surrounding the working pads. Alternatively, waste could be hauled from the tanks using the vacuum tanker and hauled to waste storage.

Holding Tank Pump Failure

Potential failure of the holding tank pumps would cause the drains to overflow into the parlor. Alternatively, waste could be hauled from the tanks using the vacuum tanker and hauled to waste storage, or a portable pump could be used to replace the holding tank pump.

Waste Pump Station

The waste pump station between WSF2 and WSF3 was designed with a primary and a back up pump in case one pump isn't operational or high runoff occurs. Alternatively waste could be pumped to WSF3 using portable pumping equipment used to empty the waste storages.

WSF1/WSF2/WSF3

Potential failure of a Waste Storage Facility could be limited by pumping waste to another WSF until the situation could be fixed. The compacted clay liner under the WSFs provides additional protection if an issue arises with the concrete liner.

9. Operation and Maintenance Plan

The Operation and Maintenance Plan is presented in a separate report that is enclosed with this design report.

10. Construction Plans and Specifications

Construction drawings are enclosed with this design report. The drawings provide the layout and details of the proposed structures. Applicable NRCS Construction Specifications are referenced in the drawings and copies of the applicable specifications are included in the Construction Quality Assurance Plan.

11. Construction Schedule

Construction is planned to commence once DNR and County approvals are received.

The silage pad construction will need to be completed first to allow for storage of feed in the summer and fall during harvest before cows arrive.

The timetable for construction of Phase II will depend on when Phase I construction is completed. The digester will be installed after the buildings and reviewable facilities are completed to ensure that the digester is efficiently sized and fully integrated to the manure handling, electrical and building heating infrastructure. The digester is planned to be operational at the time the facility is populated with animals.

12. Construction Quality Assurance Plan

The Construction Quality and Assurance Plan is presented in a separate report that is enclosed with this design report.

Appendix A – Site Maps

Quad Map

Legend

- 1% Annual Chance Flood Haz
- 0.2% Annual Chance Flood Ha
- Floodway
- Open Water (lakes, ponds, wic
- Streams and Rivers
- Township
- Section
- Rivers and Streams
- Open Water

Notes

1.2 0 0.62 1.2 Miles

NAD_1983_HARN_Wisconsin_TM

© Latitude Geographics Group Ltd.

DISCLAIMER: The information shown on these maps has been obtained from various sources, and are of varying age, reliability and resolution. These maps are not intended to be used for navigation, nor are these maps an authoritative source of information about legal land ownership or public access. No warranty, expressed or implied, is made aregarding accuracy, applicability for a particular use, completemenss, or legality of the information depicted on this map. For more information, see the DNR Legal Notices web page: http://dnr.wi.gov/org/legal/

Designated Waters Map

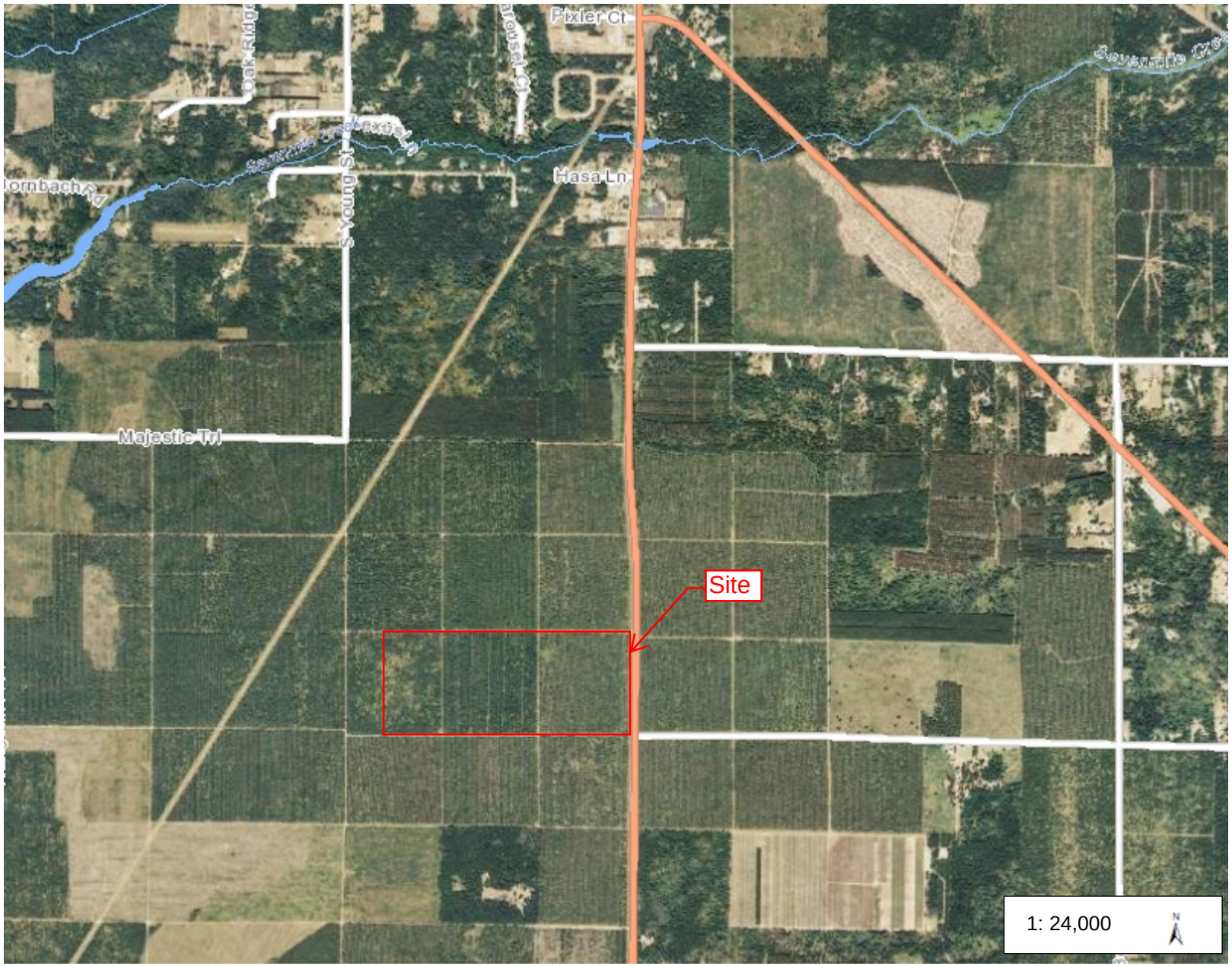

Legend

- PRF Sensitive Rivers
- PRF Other River Public Rights
- PRF Sensitive Areas of Lakes
- PRF Other Public Rights Featu
- ASNRI Wild and Scenic Rivers
- ASNRI Outstanding and Excep
- ASNRI Trout Streams
- ASNRI Wild Rice Streams
- ASNRI Quality Wetland Strean
- ASNRI Endangered Threatene Concern Waters
- ASNRI Outstanding and Excep
- ASNRI Quality Wetland Areas
- ASNRI Wild Rice Areas
- ASNRI Trout Spring Ponds
- ASNRI Endangered Threatene Concern Lakes
- ASNRI State Natural Areas
- PNW Musky Streams
- PNW Sturgeon Streams
- PNW Perennial Trout Stream T
- PNW Musky Areas
- PNW Sturgeon Areas
- PNW Walleye Areas
- PNW Lakes Less Than 50 Acr
- Open Water (lakes, ponds, wid
- Streams and Rivers
- Rivers and Streams

Notes

0.8 0 0.38 0.8 Miles

NAD_1983_HARN_Wisconsin_TM

© Latitude Geographics Group Ltd.

DISCLAIMER: The information shown on these maps has been obtained from various sources, and are of varying age, reliability and resolution. These maps are not intended to be used for navigation, nor are these maps an authoritative source of information about legal land ownership or public access. No warranty, expressed or implied, is made aregarding accuracy, applicability for a particular use, completemenss, or legality of the information depicted on this map. For more information, see the DNR Legal Notices web page: http://dnr.wi.gov/org/legal/

Floodplain Map

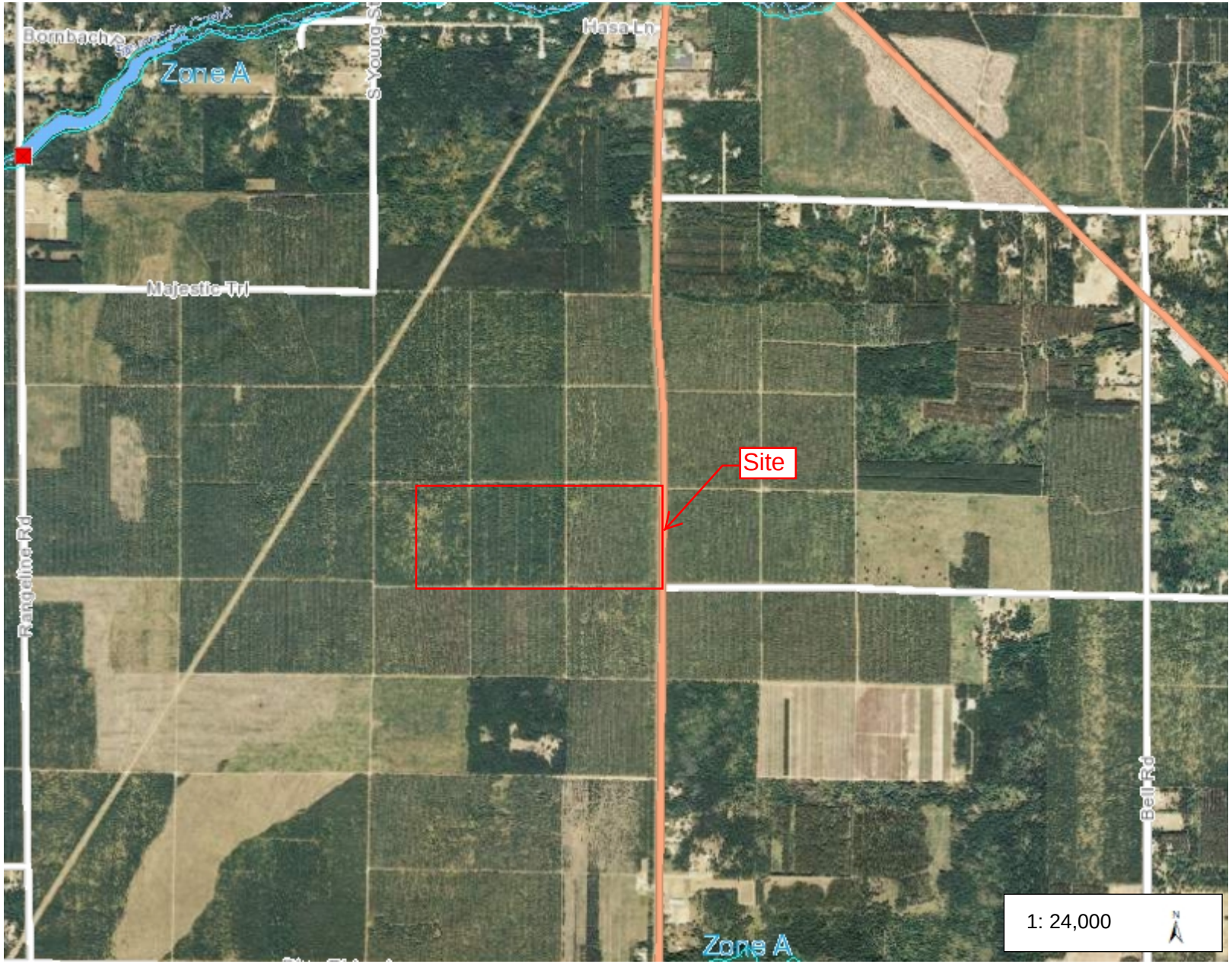

Legend

- Dams
- 1% Annual Chance Flood Haz
- 0.2% Annual Chance Flood Ha
- Floodway
- Cross Sections
- Open Water (lakes, ponds, wic
- Streams and Rivers
- Rivers and Streams
- Open Water
- Hillshades (10-meter DEM)
  - High : 255
  - Low : 0

Notes

0.8 0 0.38 0.8 Miles

NAD_1983_HARN_Wisconsin_TM

© Latitude Geographics Group Ltd.

DISCLAIMER: The information shown on these maps has been obtained from various sources, and are of varying age, reliability and resolution. These maps are not intended to be used for navigation, nor are these maps an authoritative source of information about legal land ownership or public access. No warranty, expressed or implied, is made aregarding accuracy, applicability for a particular use, completemenss, or legality of the information depicted on this map. For more information, see the DNR Legal Notices web page: http://dnr.wi.gov/org/legal/

Wetlands Map

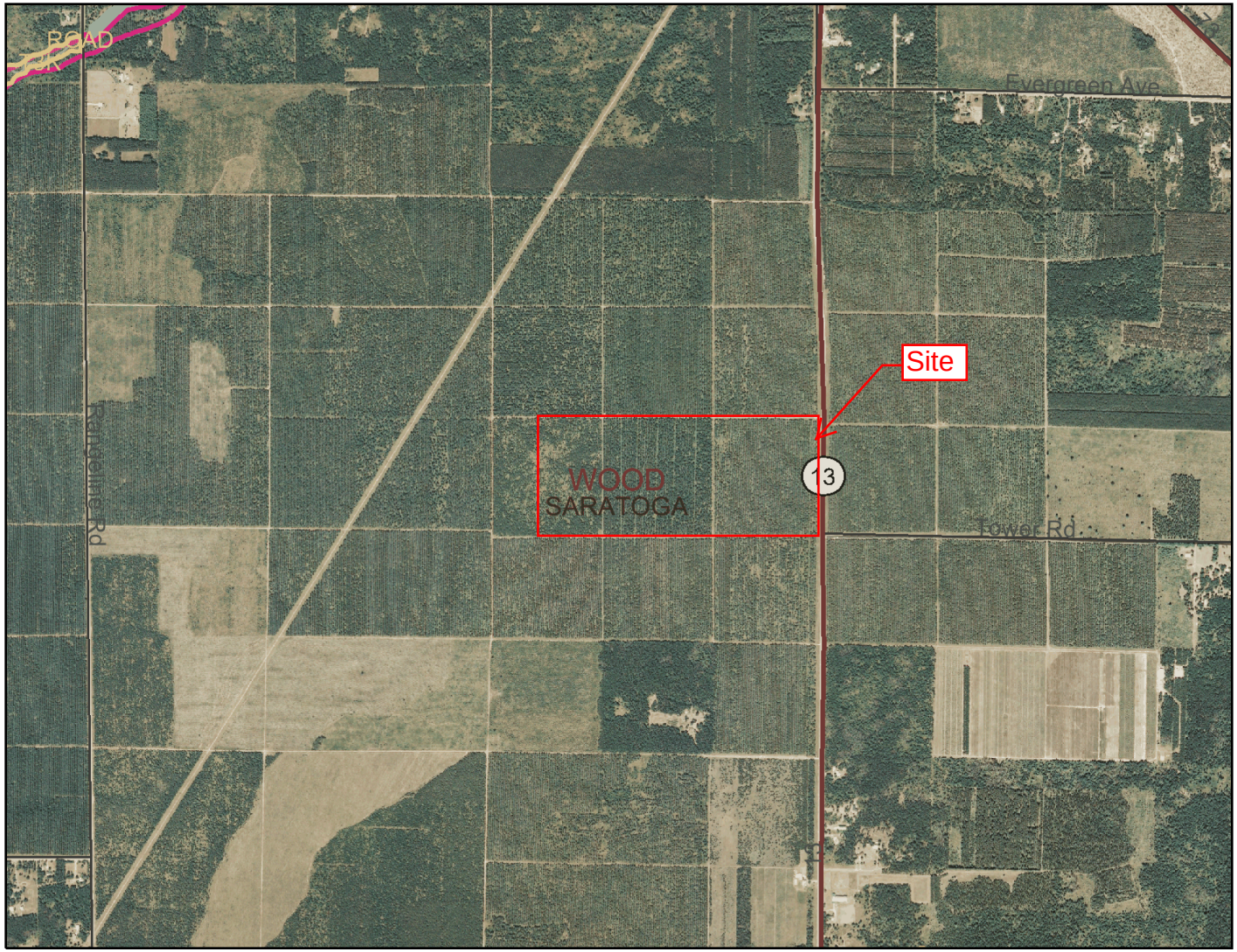

Legend

Major Highways

- Interstate
- State Highway
- U.S. Highways

County Roads

Local Roads

24K County Boundaries

Civil Towns

- Civil Town

USDA Wetspots

DNR Wetland Points

- Excavated Pond
- Dammed Pond
- Wetland Too Small to Delineate
- Filled Excavated Pond
- Filled Dammed Pond
- Filled Wetland Too Small to Delineate
- Filled or Drained Wetland

DNR Wetland Areas

- Upland
- Wetland
- Filled or Drained Wetland

Wetland Indicator Soils

24K Open Water

24K Rivers and Shorelines

- Intermittent
- Fluctuating
- Perennial

Cities and Villages

- Village
- City

N

Scale: 1:24,000

0 2250 4500 6750 ft.

Map created on May 15, 2012

Wisconsin Wetland Inventory (WWI) maps show graphic representations of the type, size and location of wetlands in Wisconsin. These maps have been prepared from the analysis of high altitude imagery in conjunction with soil surveys, topographic maps, previous wetland inventories and field work. State statutes define a wetland as "an area where water is at, near or above the land surface long enough to be capable of supporting aquatic or hydrophytic vegetation and which has soils indicative of wet conditions." The principal focus of the WWI is to produce wetland maps that are graphic representations of the type, size and location of wetlands in Wisconsin. Within this context, the objective of the WWI is to produce reconnaissance level information on the location, type, size of these habitats such that they are accurate at the nominal scale of the 1:24,000 (1 inch = 2000 feet) base map. The DNR recognizes the limitations of using remotely sensed information as the primary data source. They are to be used as a guide for planning purposes. There is no attempt, in either the design or products of this inventory, to define the limits of jurisdiction of any Federal, State, or local government or to establish the geographical scope of the regulatory programs of government agencies. Persons intending to engage in activities involving modifications within or adjacent to wetland areas should seek the advice of appropriate Federal, State, or local agencies concerning specified agency regulatory programs and jurisdictions that may affect such activities. The most accurate method of determining the legal extent of a wetland for federal or state regulations is a field delineation of the wetland boundary by a professional trained in wetland delineation techniques.

Soils Map

Entire site and adjacent area are PfA.

0 2250 4500 6750 ft.

Map created on May 15, 2012

Legend

Major Highways

- Interstate
- State Highway
- U.S. Highways

County Roads

Local Roads

24K County Boundaries

Civil Towns

- Civil Town

NRCS Wisconsin Soils

- Open Water
- Soil Mapping Unit

24K Open Water

24K Rivers and Shorelines

- Intermittent
- Fluctuating
- Perennial

Cities and Villages

- Village
- City

N

Scale: 1:24,000

Wisconsin Wetland Inventory (WWI) maps show graphic representations of the type, size and location of wetlands in Wisconsin. These maps have been prepared from the analysis of high altitude imagery in conjunction with soil surveys, topographic maps, previous wetland inventories and field work. State statutes define a wetland as "an area where water is at, near or above the land surface long enough to be capable of supporting aquatic or hydrophytic vegetation and which has soils indicative of wet conditions." The principal focus of the WWI is to produce wetland maps that are graphic representations of the type, size and location of wetlands in Wisconsin. Within this context, the objective of the WWI is to produce reconnaissance level information on the location, type, size of these habitats such that they are accurate at the nominal scale of the 1:24,000 (1 inch = 2000 feet) base map. The DNR recognizes the limitations of using remotely sensed information as the primary data source. They are to be used as a guide for planning purposes. There is no attempt, in either the design or products of this inventory, to define the limits of jurisdiction of any Federal, State, or local government or to establish the geographical scope of the regulatory programs of government agencies. Persons intending to engage in activities involving modifications within or adjacent to wetland areas should seek the advice of appropriate Federal, State, or local agencies concerning specified agency regulatory programs and jurisdictions that may affect such activities. The most accurate method of determining the legal extent of a wetland for federal or state regulations is a field delineation of the wetland boundary by a professional trained in wetland delineation techniques.

Appendix B – Soils and Groundwater Data

Golden Sands Dairy Soil Borings Summary						
Boring	Surface Elevation	Depth of Boring	Depth to Saturation	Depth to Bedrock	Saturation Elevation	Bedrock Elevation
SB1	1001.79	24	23.5		978.29	
SB2	1003.08	24	23.5		979.58	
SB3	1002.96	24	23.5		979.46	
SB4	1002.30	24	22.5		979.80	
SB5	1003.08	24	23.8		979.28	
SB6	1003.20	24	23.3		979.90	
SB7	1003.38	24	23.5		979.88	
SB8	1002.35	24	22		980.35	
SB9	1002.61	24	23.5		979.11	
SB10	1003.51	24	23		980.51	
SB11	1003.62	24	23		980.62	
SB12	1003.21	24	23		980.21	
SB13	1004.44	24	22.5		981.94	
SB14	1004.32	15				
SB15	1004.69	12				
SB16	1003.55	12				
SB17	1004.62	12				
SB18	1005.07	12				
SB19	1004.35	24	22.5		981.85	
SB20	1003.52	15				
SB21	1005.14	15				
SB22	1006.12	15				
SB23	1004.40	15				
SB24	1003.94	24	21.5		982.44	
SB25	1003.05	15				
SB26	1003.92	15				
SB27	1005.41	24	22		983.41	
SB28	1008.95	15				
SB29	1005.43	15				
SB30	1006.50	15				
SB31	1004.9	11				
SB32	1004.7	11				
SB33	1004.5	11				
SB34	1004.22	25	24.3		979.97	
SB35	1002.82	25	23.75		979.07	
SB36	1002.94	25	23.17		979.77	
SB37	1002.34	25	22.5		979.84	
SB38	1005	25	24.17		980.83	
SB39	1002.03	25	22.67		979.36	
SB40	1003.03	25	25		978.03	
SB41	1002.64	25	23.8		978.84	
SB42	1002.22	25	23.4		978.82	
SB43	1003.21	25	25		978.21	

Golden Sands Dairy Soil Borings Summary						
Boring	**Surface Elevation**	**Depth of Boring**	**Depth to Saturation**	**Depth to Bedrock**	**Saturation Elevation**	**Bedrock Elevation**
SB44	1004.81	25				
SB45	1002.03	30	25.83		976.20	
SB46	1002.32	30	25.83		976.49	
SB47	1002.93	30	27		975.93	
SB48	1003.66	25	24.75		978.91	
SB49	1001.79	25	23.5		978.29	
SB50	1001.98	15				
SB51	1003.33	15				
SB52	1001.71	15				
SB53	1005.98	15				
SB54	1005.71	15				
SB55	1004.28	15				
SB56	1004.16	15				
SB57	1004.02	15				
SB58	1004.59	15				
SB59	1002.53	15				
SB60	1002.4	30	22.58		979.82	
SB61	1003.13	30	22.5		980.63	
SB62	1003.65	15				
SB63	1004.31	15				
SB64	997.51	15				
SB65	1002.65	30	22.5		980.15	
SB66	1005.07	15				
SB67	1007.05	15				
SB68	1006.79	15				
SB69	1005.92	15				
SB70	1003.25	15				
SB71	1005.59	15				
SB72	1006.79	15				
		Average	23.49		979.58	
		Min	21.5		975.93	
		Max	27.0		983.4	

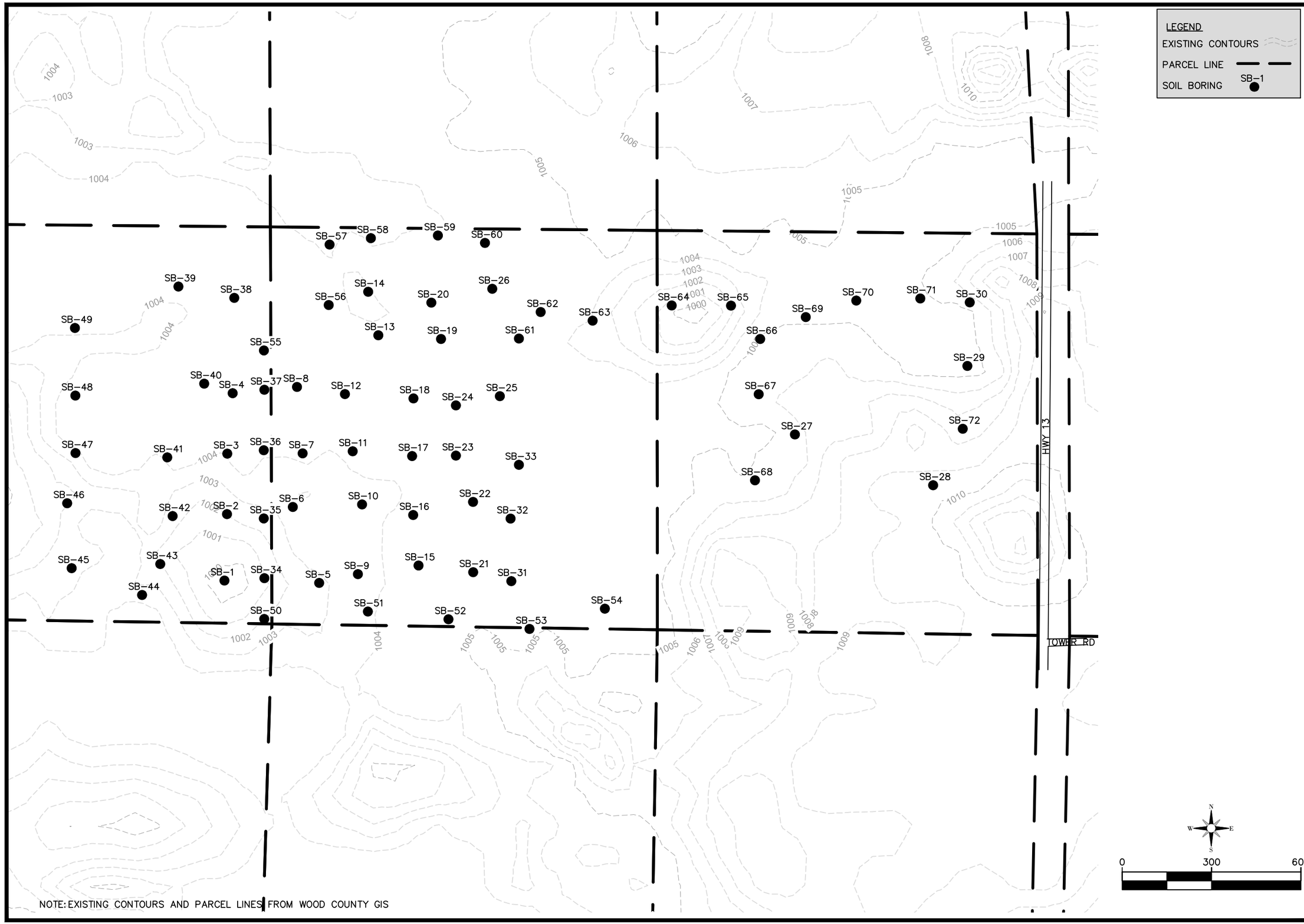

NOTE: EXISTING CONTOURS AND PARCEL LINES FROM WOOD COUNTY GIS

REVISIONS:
DATE
DATE
DATE
DATE

RESOURCE ENGINEERING ASSOCIATES, INC.
Resource Engineering Associates, Inc.
3510 Parmenter St., Suite 100
Middleton, Wisconsin 53562-2507
Phone: 608-831-5522
Fax: 608-831-6564
Web: www.reaeng.com

EXISTING SITE LAYOUT
FACILITY SITE PLAN
GOLDEN SANDS DAIRY
8550 CENTRAL SANDS ROAD
BANCROFT, WI 54921

DATE: AUG 2013
DRAWN: EML
CHECKED: DRW
APPROVED: RJP
DRAWING NAME: 1232site.dwg
PROJECT NUMBER: 120032.1

C100

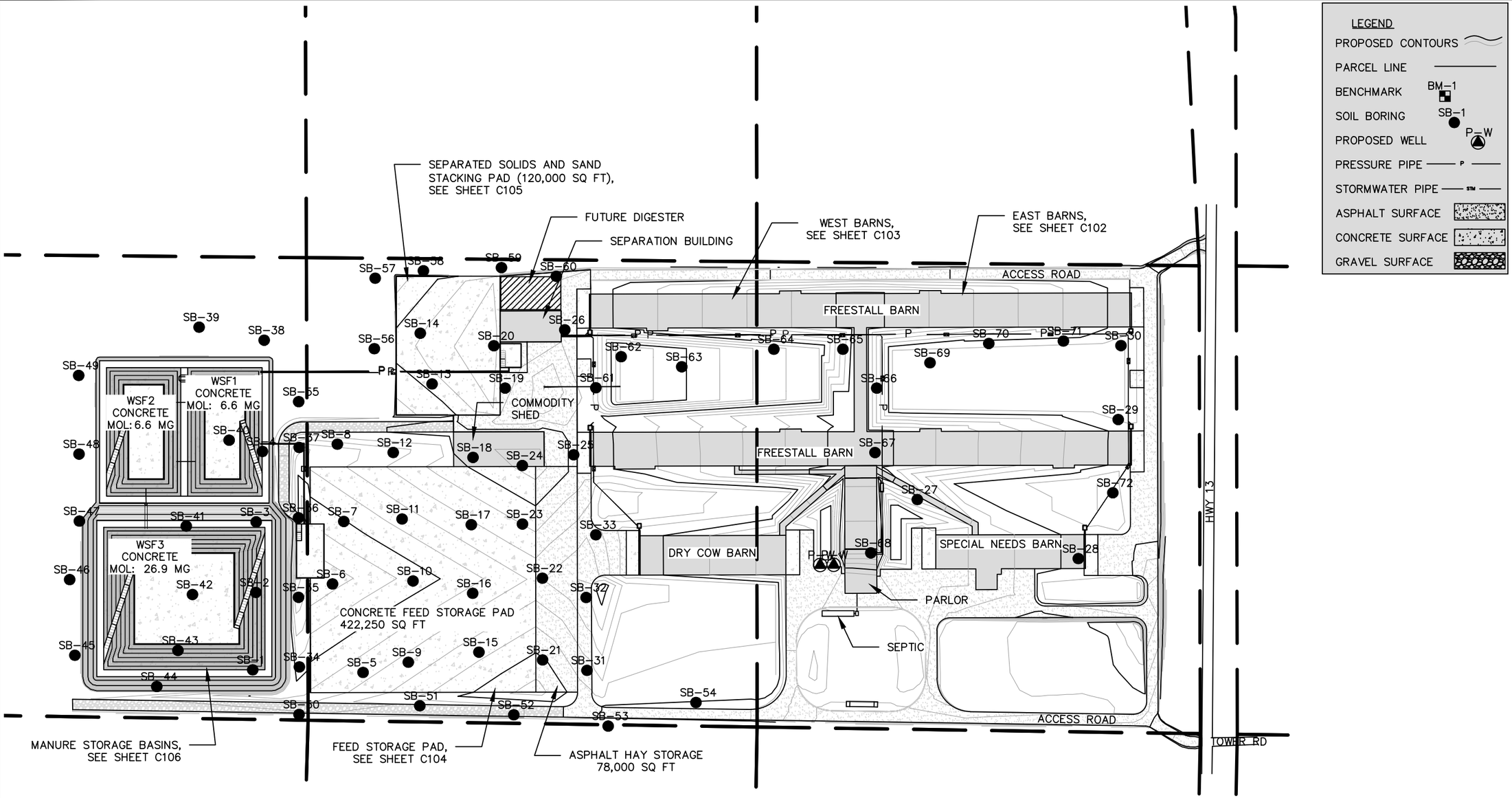

LEGEND

- PROPOSED CONTOURS
- PARCEL LINE
- BENCHMARK (BM-1)
- SOIL BORING (SB-1)
- PROPOSED WELL (P-W)
- PRESSURE PIPE (P)
- STORMWATER PIPE (STM)
- ASPHALT SURFACE
- CONCRETE SURFACE
- GRAVEL SURFACE

REVISIONS:
DATE
DATE
DATE
DATE

RESOURCE ENGINEERING ASSOCIATES, INC.
Resource Engineering Associates, Inc.
3510 Parmenter St., Suite 100
Middleton, Wisconsin 53562-2507
Phone: 608-831-5522
Fax: 608-831-6564
Web: www.reaeng.com

PROPOSED SITE LAYOUT
FACILITY SITE PLAN
GOLDEN SANDS DAIRY
8550 CENTRAL SANDS ROAD
BANCROFT, WI 54921

DATE: AUG 2013
DRAWN: EML
CHECKED: DRW
APPROVED: RJP
DRAWING NAME: 1232site.dwg
PROJECT NUMBER: 120032.1

C101

Golden Sands Dairy Soil Borings/Structures Summary									
WSF1									
		Footprint	79,270	Borings Required		6.0	Borings Needed		0.0
Boring	Surface Elevation	Depth of Boring	Boring Bottom Elevation	Structure Bottom Elevation	Depth Boring Below Structure	Saturation Elevation	Bedrock Elevation	Structure Bottom Saturation Separation	Structure Bottom Bedrock Separation
SB3	1002.96	24	978.96	989	10.04	979.46		9.54	
SB4	1002.30	24	978.30	989	10.70	979.80		9.20	
SB38	1005.00	25	980.00	989	9.00	980.83		8.17	
SB37	1002.34	25	977.34	989	11.66	979.84		9.16	
SB40	1003.03	25	978.03	989	10.97	978.03		10.97	
SB41	1002.64	25	977.64	989	11.36	978.84		10.16	
WSF2									
		Footprint	79,270	Borings Required		6.0	Borings Needed		0.0
Boring	Surface Elevation	Depth of Boring	Boring Bottom Elevation	Structure Bottom Elevation	Depth Boring Below Structure	Saturation Elevation	Bedrock Elevation	Structure Bottom Saturation Separation	Structure Bottom Bedrock Separation
SB39	1002.03	25	977.03	989	11.97	979.36		9.64	
SB40	1003.03	25	978.03	989	10.97	978.03		10.97	
SB41	1002.64	25	977.64	989	11.36	978.84		10.16	
SB47	1002.93	30	972.93	989	16.07	975.93		13.07	
SB48	1003.66	25	978.66	989	10.34	978.91		10.09	
SB49	1001.79	25	976.79	989	12.21	978.29		10.71	
WSF3									
		Footprint	190,400	Borings Required		13.0	Borings Needed		1.0
Boring	Surface Elevation	Depth of Boring	Boring Bottom Elevation	Structure Bottom Elevation	Depth Boring Below Structure	Saturation Elevation	Bedrock Elevation	Structure Bottom Saturation Separation	Structure Bottom Bedrock Separation
SB1	1001.79	24	977.79	989	11.21	978.29		10.71	
SB2	1003.08	24	979.08	989	9.92	979.58		9.42	
SB3	1002.96	24	978.96	989	10.04	979.46		9.54	
SB34	1004.22	25	979.22	989	9.78	979.97		9.03	
SB35	1002.82	25	977.82	989	11.18	979.07		9.93	
SB36	1002.94	25	977.94	989	11.06	979.77		9.23	
SB41	1002.64	25	977.64	989	11.36	978.84		10.16	
SB42	1002.22	25	977.22	989	11.78	978.82		10.18	
SB43	1003.21	25	978.21	989	10.79	978.21		10.79	
SB44	1004.81	25	979.81	989	9.19	N A			
SB45	1002.03	30	972.03	989	16.97	976.20		12.80	
SB46	1002.32	30	972.32	989	16.68	976.49		12.51	
SB47	1002.93	30	972.93	989	16.07	975.93		13.07	

REA SOIL PROFILE/TEST PIT LOG

PROJECT Wysocki
DATE 5-9-12 PROJ #
MAP UNIT
SURFACE COND. Grass/Trees
DRAWING #

LOCATION
TEST [redacted] #1
DTW 23.5'
SURFACE ELEV. 1001.7917
[redacted] DESCRIPTION (N Rd) - basin Area (SW corner)
REA T[redacted] Rp.
EQUIP. Geoprobe.
DEPTH to BEDROCK

~9:00 AM

Recovery

DEPTH (ft)	USCS Class	DESCRIPTION OF USCS PROPERTIES (Depth, USCS Name, Stiffness, Plasticity, Qualifiers, Moisture & Color)	COLOR Matrix	COLOR Mottling	SAMPLE Depth	LOCATION & GENERAL DATA (Site Map, Geology Units, Water Table, Field Tests, Comments) Note: Cased Sample Tube.	DEPTH (ft)
0	12"	Topsoil					0
1	SP	Poorly graded sand... moist				7.5YR 4/4 Very Dark Brown	1
38" 2		few fines <10% - medium grain				few fine Roots to ~ 4ft.	2
3		Very Dark Brown			X		3
4		4' - Brown				10YR 5/4 Brown.	4
26" 5							5
6							6
7							7
8							8
9		9' Coarser texture - few gravel					9
29" 10							10
11							11
12							12
13							13
29" 14		14' Very little fines - mostly coarse sand!					14
15							15
16							16
17		Pocket of small gravel coarse grained sand. - still moist					17
28 18							18
19							19
20							20
29" 21						After ~10 min waterlevel IN casing @ 23.8'	21
22							22
23	4"	finer grain sand -					23
24		free water apparent at 24' IN profile appears started at 23½'.				7.5YR 4/4 Brown	24
39" 25					X	EOB at 28'	25

Page __ of __

REA SOIL PROFILE/TEST PIT LOG

PROJECT Wysocki
DATE 5-9-12 PROJ #
MAP UNIT
SURFACE COND. Trees/grass.
DRAWING #

LOCATION
TEST [redacted] #2
DTW 23.5'
SURFACE ELEV. 1003.0786
[redacted] DESCRIPTION N #1 - 200'

REA T[redacted] RO.
EQUIP. Geoprobe
DEPTH to BEDROCK

10:00 Am.

DEPTH (ft)	USCS Class	DESCRIPTION OF USCS PROPERTIES Depth, USCS Name, Stiffness, Plasticity, Qualifiers, Moisture & Color	COLOR Matrix	COLOR Mottling	SAMPLE Depth	LOCATION & GENERAL DATA Site Map, Geology Units, Water Table, Field Tests, Comments	DEPTH (ft)
0	8"	Top soil - Dark Brown. Sand. - few grass & roots.					0
1	SP	Poorly graded Sand moist - few fines Strong Brown medium grained				7.5YR4/6. - Strong brown	1
2		moist					2
3						10YR 4/4 Dark yellow brown	3
4							4
5							5
6							6
7							7
8							8
9							9
10		medium to coarse grained still moist					10
11							11
12							12
13							13
14							14
15							15
16		medium grained Sand					16
17							17
18							18
19							19
20							20
21							21
22							22
23		23.5' Apparent Saturation					23
24		EOB 24'					24
25							25

24" 28" 29 28 26"

Page __ of __

REA SOIL PROFILE/TEST PIT LOG

PROJECT Wysochi
DATE 5/9/12 PROJ #
LOCATION
TEST [redacted] #3 REA T[redacted] Rp.
MAP UNIT
DTW 23.5 ft EQUIP. Geoprobe.
SURFACE COND. Grass/Trees.
SURFACE ELEV. 1002.96 DEPTH to BEDROCK
DRAWING #
[redacted] DESCRIPTION 200' N #2.

DEPTH (ft)	USCS Class	DESCRIPTION OF USCS PROPERTIES Depth, USCS Name, Stiffness, Plasticity, Qualifiers, Moisture & Color	COLOR Matrix	COLOR Mottling	SAMPLE Depth	LOCATION & GENERAL DATA Site Map, Geology Units, Water Table, Field Tests, Comments	DEPTH (ft)
0	6"	Top Soil Dark Brown - moist Sand Some root; grass organic material.					0
1	SP	Brown - moist - few fines 7.5YR 4/4					1
2	SP	7.5YR5/4 Brown					2
3							3
4							4
5							5
6		6' - Streak 7.5YR 4/6 strong brown moist					6
7		7.5YR 5/4 Brown.					7
8							8
9							9
10		lense with more moisture - at 10' - 11'.			X		10
11							11
12							12
13							13
14							14
15							15
16							16
17							17
18							18
19							19
20							20
21							21
22							22
23		23.5' apparent saturation					23
24		EOB 24'					24
25							25

29"
28
30
26"
30
26"

Page __ of __

REA SOIL PROFILE/TEST PIT LOG

PROJECT Wysocki
DATE _____ PROJ # _____
MAP UNIT _____
SURFACE COND. Grass/Trees
DRAWING # _____

LOCATION _____
TEST [redacted] #4
DTW _____
SURFACE ELEV. 1002.30
[redacted] DESCRIPTION N #3-200'

REA T[redacted] Rg.
EQUIP. Geoprobe
DEPTH to BEDROCK _____
(Appears to be in a Low Area)

11:20 Am

DEPTH (ft)	USCS Class	DESCRIPTION OF USCS PROPERTIES Depth, USCS Name, Stiffness, Plasticity, Qualifiers, Moisture & Color	COLOR Matrix	COLOR Mottling	SAMPLE Depth	LOCATION & GENERAL DATA Site Map, Geology Units, Water Table, Field Tests, Comments	DEPTH (ft)
0	4"	Topsoil - 4" Dark Brown moist grass; Roots					0
1	SP	med. to fine Sand - Some Silt moist. 7.5YR 4/4 Brown.					1
2		↓					2
3		7.5YR 5/4 Brown					3
4		↓			X		4
5							5
6							6
7		At ~7' medium sand - less Silt					7
8	SP	↓					8
9							9
10							10
11							11
12							12
13							13
14		Lense medium Sand					14
15							15
16							16
17							17
18							18
19							19
20							20
21							21
22		▽ 22.5' Apparent Saturation					22
23							23
24		EOB - 24'					24
25							25

24"
29"
30"
23"
28"
24"

Page ___ of ___

REA SOIL PROFILE/TEST PIT LOG

PROJECT
DATE 5/9/12 PROJ #
MAP UNIT
SURFACE COND. Trees/grass.
DRAWING #

LOCATION
TEST [redacted] #5
DTW 23.8 FT.
SURFACE ELEV. 1003.08
[redacted] DESCRIPTION 200' E. #1

REA T[redacted] Rp
EQUIP. Geoprobe
DEPTH to BEDROCK

DEPTH (ft)	USCS Class	DESCRIPTION OF USCS PROPERTIES Depth, USCS Name, Stiffness, Plasticity, Qualifiers, Moisture & Color	COLOR Matrix	COLOR Mottling	SAMPLE Depth	LOCATION & GENERAL DATA Site Map, Geology Units, Water Table, Field Tests, Comments	DEPTH (ft)
0	6"	Topsoil dark brown - moist grass; Roots. - Sand -					0
1	P	Sand - medium grained - Poorly graded moist				7.5YR 4/6 Strong brown.	1
2							2
3							3
4		7.5YR 5/4 brown medium to fine Sand.					4
5							5
6							6
7							7
8		3" Lense Coarse sand.					8
9							9
10		MORE moisture - medium to Coarse Sand.					10
11							11
12							12
13							13
14							14
15							15
16							16
17							17
18							18
19							19
20							20
21							21
22							22
23		▽ Saturation at ~ 23.8'					23
24		EOB 24'					24
25							25

Page ___ of ___

REA SOIL PROFILE/TEST PIT LOG

PROJECT Wyzocki
DATE 5-9-12 PROJ #
MAP UNIT
SURFACE COND Grass/Trees.
DRAWING #
END 1:15 pm

LOCATION
TEST [redacted] #6
DTW 23.3 ft
SURFACE ELEV. 1003.20
[redacted] DESCRIPTION 200' N #5

REA T[redacted] Rp.
EQUIP. Geoprobe.
DEPTH to BEDROCK

DEPTH (ft)	USCS Class	DESCRIPTION OF USCS PROPERTIES Depth, USCS Name, Stiffness, Plasticity, Qualifiers, Moisture & Color	COLOR Matrix	COLOR Mottling	SAMPLE Depth	LOCATION & GENERAL DATA Site Map, Geology Units, Water Table, Field Tests, Comments	DEPTH (ft)
0	6"	Topsoil - dark brown - moist few fines - many fine Roots.					0
1	SP	Sand medium - Some fines - poorly graded - few gravel (1/4" ϕ) moist				7.5YR 3/4 Dark Brown	1
4	SP	7.5YR 6/4 light brown.					4
4		Less fines					4
8		7.5YR 5/4 brown - moist - (more moist than above). more fines.			X		8
12		more coarse sand - less fines					12
18		medium sand					18
22		7.5YR 5/6 Strong brown.					22
23		Saturation ~ 23.3'					23
24		EOB - 24'					24
25							25

24"
27"
25
27
27
28

Page ___ of ___

REA SOIL PROFILE/TEST PIT LOG

LOCATION W 1/4
TEST [redacted] #7
DTW 23.5 ft.
SURFACE ELEV. 1003.38
[redacted] DESCRIPTION 200' N #6.

REA T[redacted] Rp.
EQUIP. Geoprobe
DEPTH to BEDROCK

PROJECT Wysocki
DATE 5-9-12 PROJ #
MAP UNIT
SURFACE COND. Grass/Trees.
DRAWING #

DEPTH (ft)	USCS Class	DESCRIPTION OF USCS PROPERTIES Depth, USCS Name, Stiffness, Plasticity, Qualifiers, Moisture & Color	COLOR Matrix	COLOR Mottling	SAMPLE Depth	LOCATION & GENERAL DATA Site Map, Geology Units, Water Table, Field Tests, Comments	DEPTH (ft)
0		6" Topsoil dark brown - Sand. Roots. moist					0
1	Sp	Poorly graded medium Sand - moist				7.5YR 4/4 Brown 3'	1
2						7.5YR 5/4 Brown	2
3							3
4							4
5							5
6							6
7							7
8							8
9							9
10		MORE moisture @ 10' & down.					10
11							11
12							12
13							13
14		medium to coarse Sand 14'+					14
15							15
16							16
17							17
18		18 Strong Brown.				7.5YR 5/6 Strong Brown	18
19		19 Brown					19
20		medium to coarse Sand					20
21							21
22							22
23		▽ Saturated at 23.5'					23
24		EOB 24'					24
25							25

25" 28" 28" 30 24 16

Page __ of __

REA SOIL PROFILE/TEST PIT LOG

PROJECT Wysocki

LOCATION W/d

DATE 5-9-12 PROJ #

TEST [redacted] #8

REA T[redacted] Rp.

MAP UNIT

DTW 22.0'

EQUIP. Geoprobe

SURFACE COND.

SURFACE ELEV. 1002.35

DEPTH to BEDROCK

DRAWING #

[redacted] DESCRIPTION 200' N #7

2:00 Start

DEPTH (ft)	USCS Class	DESCRIPTION OF USCS PROPERTIES Depth, USCS Name, Stiffness, Plasticity, Qualifiers, Moisture & Color	COLOR Matrix	COLOR Mottling	SAMPLE Depth	LOCATION & GENERAL DATA Site Map, Geology Units, Water Table, Field Tests, Comments	DEPTH (ft)
0	7"	Topsoil - Dark Brown - Roots, grass. Sand.					0
1	SP	Sand few fines - brown. Moist, medium grain.				7.5 YR 4/4	1
2							2
3	3'	7.5 YR 5/4. Brown					3
4							4
5							5
6							6
7							7
8		Coarser grained. 7.5 YR 4/4 Brown.					8
9							9
10		more moisture. at 10' +					10
11							11
12							12
13							13
14		medium grained					14
15							15
16							16
17							17
18							18
19							19
20							20
21							21
22		▽ Apparent Saturation ~22'					22
23							23
24		EOB - 24'					24
25							25

27 27 26" 27 27" 23"

Page ___ of ___

REA SOIL PROFILE/TEST PIT LOG

LOCATION
TEST [redacted] # 9
DTW 23.5 ft.
SURFACE ELEV. 1002.61
[redacted] DESCRIPTION 200' S #110

REA T[redacted] Rp.
EQUIP. Geoprobe
DEPTH to BEDROCK

PROJECT
DATE 5-9-12 PROJ #
MAP UNIT
SURFACE COND. Grass/Trees.
DRAWING #
Start 435 END 500

DEPTH (ft)	USCS Class	DESCRIPTION OF USCS PROPERTIES (Depth, USCS Name, Stiffness, Plasticity, Qualifiers, Moisture & Color)	COLOR Matrix	COLOR Mottling	SAMPLE Depth	LOCATION & GENERAL DATA (Site Map, Geology Units, Water Table, Field Tests, Comments)
0	4"	Topsoil Sand - moist Dark Brown.				
		Sand few fines - medium grain				
1		7.5YR 3/4 Dark Brown. moist				Sampled 1-3'
2						
3						
4		7.5YR 5/8 - (Strong Brown)				
5		7.5YR 4/3 (Brown)				
6						
7						
8		medium to coarse grained. 7.5YR 5/3 (Brown)				
9						
10						
11		MORE moist at 11'+				
12		medium grain				
13						
14						
15						
16						
17						
18						
19						
20						
21						
22						
23		▽ Saturated at ~ 23.5'				
24		EOB at 24'				
25						

20"
29"
29
28
32"

Page __ of __

REA SOIL PROFILE/TEST PIT LOG

LOCATION
TEST [redacted] #10
DTW 23 ft
SURFACE ELEV. 1003.51
[redacted] DESCRIPTION 200' S #11

REA T[redacted] RP
EQUIP. Geoprobe
DEPTH to BEDROCK

PROJECT Wysocki
DATE 5-9-12 PROJ #
MAP UNIT
SURFACE COND. Trees/grass.
DRAWING #

DEPTH (ft)	USCS Class	DESCRIPTION OF USCS PROPERTIES (Depth, USCS Name, Stiffness, Plasticity, Qualifiers, Moisture & Color)	COLOR Matrix	COLOR Mottling	SAMPLE Depth	LOCATION & GENERAL DATA (Site Map, Geology Units, Water Table, Field Tests, Comments)
0	5"	Topsoil - Dark Brown - moist Roots; grass.				
1	SP	Sand - medium to fine - moist. 7.5YR 3/3 Dark Brown				
2	SP	Sand medium to fine grained. fines 7.5YR 5/6 Strong Brown.				
3						
4						
5		more fines				
6						
7					X	
8		4" lense - 5YR 4/6 (Yellish brown) Few small Lenses above main profile. 7.5YR 4/3 (brown) medium to Coarse Sand				
9						
10						
11						
12						
13						
14						
15						
16						
17						
18						
19						
20						
21						
22						
23		saturated at ~ 23'				
24		EOB @ 24'				
25						

23"
27"
28"
23"
24
21

Page __ of __

REA SOIL PROFILE/TEST PIT LOG

PROJECT Wysocki
DATE 5-9-12 PROJ #
MAP UNIT
SURFACE COND. Trees/Grass
DRAWING #

LOCATION
TEST [redacted] #11
DTW 23 ft
SURFACE ELEV. 1003.62
[redacted] DESCRIPTION 200' S #12

REA T[redacted] Rp
EQUIP. Geoprobe
DEPTH to BEDROCK

Finish 400

DEPTH (ft)	USCS Class	DESCRIPTION OF USCS PROPERTIES Depth, USCS Name, Stiffness, Plasticity, Qualifiers, Moisture & Color	COLOR Matrix	COLOR Mottling	SAMPLE Depth	LOCATION & GENERAL DATA Site Map, Geology Units, Water Table, Field Tests, Comments	DEPTH (ft)
0		Topsoil - Dark Brown -					0
1		Sand - medium grain - few fines - moist 7.5YR4/4 Brown					1
2							2
3		10YR 5/4 brown.					3
4							4
5							5
6							6
7		wetter at 7'					7
8		medium grained moist					8
9							9
10							10
11		11' - becomes fine sand - few fines					11
12		12' medium to coarse sand					12
13							13
14							14
15							15
16		medium sand					16
17							17
18							18
19		4" Lense 5YR 5/8 Yellowish Red					19
20		Brown below 18'-4"					20
21		Light brown 7.5YR 6/4					21
22							22
23		▽ Saturated at ~23'					23
24		EOB 24'					24
25							25

25"
30"
27"
28"
25"
30"

Page ___ of ___

REA SOIL PROFILE/TEST PIT LOG

PROJECT Wysocki
DATE 5-9-12 PROJ #
MAP UNIT
SURFACE COND. Grass / Trees.
DRAWING #
Start 2:49 pm

LOCATION
TEST [redacted] #12
DTW 23'
SURFACE ELEV. 1003.21
[redacted] DESCRIPTION 200' E #8

REA T[redacted] Rp.
EQUIP. Geoprobe
DEPTH to BEDROCK

Done 3:10

DEPTH (ft)	USCS Class	DESCRIPTION OF USCS PROPERTIES Depth, USCS Name, Stiffness, Plasticity, Qualifiers, Moisture & Color	COLOR Matrix	COLOR Mottling	SAMPLE Depth	LOCATION & GENERAL DATA Site Map, Geology Units, Water Table, Field Tests, Comments	DEPTH (ft)
0	6"	Topsoil - Dark Brown - Roots; grass moist					0
1	SP	Sand - medium grain - moist 7.5YR 3/4 Dark Brown.					1
2	SP						2
3		9.4YR 6/4 Light brown.					3
4		7.5YR 5/4 Brown					4
5							5
6							6
7							7
8		medium to coarse grained					8
9							9
10		more moisture					10
11							11
12							12
13							13
14							14
15							15
16							16
17							17
18							18
19							19
20							20
21							21
22		7.5YR 6/4 Light brown					22
23		▽ Apparent Saturation at 23' 7.5YR 5/3 Brown.					23
24		EOB 24'					24
25							25

7.8"
28"
32
22
32
61

Page __ of __

REA SOIL PROFILE/TEST PIT LOG

PROJECT Wysochi

LOCATION

DATE 5-10-12 PROJ #

TEST [redacted] #13 REA T[redacted] Rp. MAP UNIT

DTW 22.5' EQUIP. Geoprobe. SURFACE COND. Trees/grass.

SURFACE ELEV. 1004.44 DEPTH to BEDROCK DRAWING #

[redacted] DESCRIPTION 200' S #14 Start 7:00 AM END ~7:30

DEPTH (ft)	USCS Class	DESCRIPTION OF USCS PROPERTIES Depth, USCS Name, Stiffness, Plasticity, Qualifiers, Moisture & Color	COLOR Matrix	COLOR Mottling	SAMPLE Depth	LOCATION & GENERAL DATA Site Map, Geology Units, Water Table, Field Tests, Comments	DEPTH (ft)
0	5"	Topsoil Dark Brown - moist - Roots, glass					0
1	12"	Sand - fine grained - moist 7.5YR 3/4 Dark Brown.					1
		7.5YR4/4 Brown					
2							2
3							3
4		medium grained					4
5							5
6							6
7							7
8							8
9							9
10							10
11	4	4" Lense fine sand					11
12		medium to coarse sand					12
13							13
14							14
15							15
16							16
17							17
18							18
19							19
20							20
21							21
22		▽ Saturated at ~22½'					22
23							23
24		EOB - 24'					24
25							25

25" 1 30 31 23 7 28 27"

Page __ of __

REA SOIL PROFILE/TEST PIT LOG

PROJECT Wysocki

LOCATION

DATE 5-10-12 PROJ #

TEST [redacted] #14 REA [redacted] Ro MAP UNIT

DTW excavation EQUIP. Logger GeoProbe SURFACE COND. Trees/grass

SURFACE ELEV. 1004.82 DEPTH to BEDROCK DRAWING #

[redacted] DESCRIPTION 150' N #13 END 8:55 am.

DEPTH (ft)	USCS Class	DESCRIPTION OF USCS PROPERTIES (Depth, USCS Name, Stiffness, Plasticity, Qualifiers, Moisture & Color)	COLOR Matrix	COLOR Mottling	SAMPLE Depth	LOCATION & GENERAL DATA (Site Map, Geology Units, Water Table, Field Tests, Comments)	DEPTH (ft)
0	6"	Topsoil - Sand - dark Brown moist. grass; Roots					0
1	Sp.	Sand - medium to fine grained little Silt - moist 7.5YR 3/4 Dark Brown					1
2	2½	medium grained sand					2
3		moist 7.5YR 5/4 brown					3
4							4
5		medium to fine grained					5
6							6
7							7
8							8
9		Coarse Sand - few medium					9
10							10
11							11
12							12
13							13
14		EOB at 15'					14

44

4

30'

REA SOIL PROFILE/TEST PIT LOG

PROJECT Wysocki

LOCATION

DATE 5-9-12 PROJ #

TEST [redacted] #15 REA [redacted] Bp MAP UNIT

DTW excavation none. EQUIP. Logger Geoprobe SURFACE COND.

SURFACE ELEV. 1004.69 DEPTH to BEDROCK DRAWING #

[redacted] DESCRIPTION 200' South Rd END 5:45

DEPTH (ft)	USCS Class	DESCRIPTION OF USCS PROPERTIES (Depth, USCS Name, Stiffness, Plasticity, Qualifiers, Moisture & Color)	COLOR Matrix	COLOR Mottling	SAMPLE Depth	LOCATION & GENERAL DATA (Site Map, Geology Units, Water Table, Field Tests, Comments)	DEPTH (ft)
0	4"	Topsoil Dark Brown - moist.					0
		Sand - few fines - medium grade - moist					
1	SP	7.5YR 4/4 Brown Poorly graded Sand moist medium grain.				7.5YR 3/4 Dark Brown.	1
2							2
3						7.5YR 5/3 Brown.	3
4							4
5							5
6		medium grained moist					6
7							7
8							8
9							9
10							10
11							11
12		EOB 12'					12
13							13
14							14

30"

REA SOIL PROFILE/TEST PIT LOG

PROJECT Wysoski

LOCATION

DATE 5-9-12 PROJ #

TEST [redacted] # 16

REA [redacted]

MAP UNIT

DTW excavation none

EQUIP. Logger

SURFACE COND. Grass/Trees

SURFACE ELEV. 1008.55

DEPTH to BEDROCK

DRAWING #

[redacted] DESCRIPTION ~200' N #15

DEPTH (ft)	USCS Class	DESCRIPTION OF USCS PROPERTIES Depth, USCS Name, Stiffness, Plasticity, Qualifiers, Moisture & Color	COLOR Matrix	COLOR Mottling	SAMPLE Depth	LOCATION & GENERAL DATA Site Map, Geology Units, Water Table, Field Tests, Comments	DEPTH (ft)
0	6"	Topsoil Dark Brown - moist Sand. few fines					0
1	Sp	Poorly graded sand - med. to fine grain - Little silt 7.5YR 3/4 Dark Brown. Moist					1
2							2
3		7.5YR 5/3 Brown					3
4							4
5							5
6							6
7							7
8							8
9		Becomes medium grained still moist					9
10							10
11							11
12		EOB 12'					12
13							13
14							14

50"

42"

REA SOIL PROFILE/TEST PIT LOG

PROJECT Wysocki

LOCATION

DATE 5-9-12 PROJ #

TEST [redacted] # 17 REA [redacted] Rp MAP UNIT

DTW excavation None. EQUIP. Logger Geoprobe SURFACE COND. grass/Trees

SURFACE ELEV. 1009.62 DEPTH to BEDROCK DRAWING #

[redacted] DESCRIPTION 200' N #16

DEPTH (ft)	USCS Class	DESCRIPTION OF USCS PROPERTIES (Depth, USCS Name, Stiffness, Plasticity, Qualifiers, Moisture & Color)	COLOR Matrix	COLOR Mottling	SAMPLE Depth	LOCATION & GENERAL DATA (Site Map, Geology Units, Water Table, Field Tests, Comments)	DEPTH (ft)
0	6"	Topsoil Dark Brown. moist					0
1	Sp	Sand - moist 7.5YR 3/4 (Dark Brown) fine to medium grain					1
2	Sp	Brown 7.5YR 5/3					2
3							3
4							4
5		medium grain. still moist					5
6							6
7							7
8							8
9							9
10							10
11							11
12		EOB 12'					12
13							13
14							14

48"

32"

REA SOIL PROFILE/TEST [redacted] LOG PROJECT Wysocki

LOCATION _____ DATE 5/9/12 PROJ # _____

TEST [redacted] # 18 REA T[redacted] RP MAP UNIT _____

DTW _____ EQUIP. Geoprobe SURFACE COND. Grass/Trees.

SURFACE ELEV. 1005.07 DEPTH to BEDROCK _____ DRAWING # _____

[redacted]L DESCRIPTION 200' N #17 start 6:25

46"

36"

DEPTH (ft)	USCS Class	DESCRIPTION OF USCS PROPERTIES Depth, USCS Name, Stiffness, Plasticity, Qualifiers, Moisture & Color	COLOR Matrix	COLOR Mottling	SAMPLE Depth	LOCATION & GENERAL DATA Site Map, Geology Units, Water Table, Field Tests, Comments	DEPTH (ft)
0	6"	Topsoil Dark Brown - Moist grass, Roots.					0
		sand moist fine to med. grain. 7.5YR 3/3 dark brown					
1							1
2							2
3		medium to fine grained moist 7.5YR 5/4 Brown					3
4							4
5							5
6		medium to coarse grained					6
7							7
8							8
9		medium grain.					9
10							10
11							11
12		EOB 12'					12
13							13
14							14
15							15

Page __ of __

REA SOIL PROFILE/TEST [redacted] LOG

PROJECT Wysocki

LOCATION

TEST [redacted] #19

REA T[redacted] Rp

DATE 5/10/12 PROJ #

DTW 22.5'

EQUIP. Geoprobe

MAP UNIT

SURFACE ELEV. 1004.35

DEPTH to BEDROCK

SURFACE COND. Grass / Trees.

[redacted] DESCRIPTION 200' E #13

DRAWING #

DEPTH (ft)	USCS Class	DESCRIPTION OF USCS PROPERTIES Depth, USCS Name, Stiffness, Plasticity, Qualifiers, Moisture & Color	COLOR Matrix	COLOR Mottling	SAMPLE Depth	LOCATION & GENERAL DATA Site Map, Geology Units, Water Table, Field Tests, Comments	DEPTH (ft)
0	4"	Topsoil - Dark Brown - moist					0
		Sand - 7.5YR 4/4 Brown - moist - medium					
1	SP	To fine grained					1
2		Sand - fine to medium grain					2
		moist 7.5YR 5/4 Brown.					
3							3
4							4
5							5
6		fine to [illegible]					6
7							7
8							8
9	6"	Coarse grain					9
10		fine to medium grain					10
11							11
12	6"	Coarse grain					12
13		medium grain					13
14							14
15							15
16							16
17							17
18							18
19		Coarse grained					19
20		medium grained					20
21							21
22		Saturation at ~22.5'					22
23							23
24		EOB 24'					24
25							25

Page __ of __

REA SOIL PROFILE/TEST [redacted] LOG

PROJECT Wysocki

LOCATION

DATE 5/10/12 PROJ #

TEST [redacted] # 20 REA [redacted] Rp. MAP UNIT

DTW 1003.52 EQUIP. Geoprobe SURFACE COND. Grass Trees

SURFACE ELEV. DEPTH to BEDROCK DRAWING #

LEGAL DESCRIPTION 150' N #19

DEPTH (ft)	USCS Class	DESCRIPTION OF USCS PROPERTIES Depth, USCS Name, Stiffness, Plasticity, Qualifiers, Moisture & Color	COLOR Matrix	COLOR Mottling	SAMPLE Depth	LOCATION & GENERAL DATA Site Map, Geology Units, Water Table, Field Tests, Comments	DEPTH (ft)
0	4"	Topsoil - Dark Brown - moist Sand					0
	SP	Sand - moist - 7.5 YR 3/4 (Dark Brown)					
1	18"	Sand					1
		Sand - moist - 7.5 YR 5/4 (Brown) medium grained					
2							2
3							3
4		10 YR 6/4 Light brown					4
5		fine grained					5
6							6
7		medium grained					7
8							8
9							9
10							10
11							11
12							12
13							13
14		EOB at 15'					14
15							15

42"

32"

43"

Page__ of __

EA SOIL PROFILE/TEST [redacted] LOG PROJECT Wysocki

LOCATION _____ DATE 5/10/12 PROJ # 120032.1

TEST [redacted] # 21 REA [redacted] Rp. MAP UNIT _____

DTW excavation EQUIP. Logger Geoprobe. SURFACE COND. Trees/grass.

SURFACE ELEV. 1005.14 DEPTH to BEDROCK _____ DRAWING # _____

[redacted] DESCRIPTION 200' S # 22. start 11:25a

DEPTH (ft)	USCS Class	DESCRIPTION OF USCS PROPERTIES Depth, USCS Name, Stiffness, Plasticity, Qualifiers, Moisture & Color	COLOR Matrix	COLOR Mottling	SAMPLE Depth	LOCATION & GENERAL DATA Site Map, Geology Units, Water Table, Field Tests, Comments	DEPTH (ft)
0	6"	Topsoil - moist - Dark Brown Sand.					0
1	SP	10 YR 3/4 Dark Brown Sand - medium to fine grained little fines - moist.					1
2							2
		7.5 YR 4/4 (Dark Brown)					
3							3
		7.5 YR 5/3 Brown					
4	4½	medium sand.					4
5							5
6							6
7							7
8							8
9							9
10							10
11							11
12							12
13							13
14		EOB 15'					14

36"

30"

34"

REA SOIL PROFILE/TEST ~~PIT~~ LOG

PROJECT Wysocki

LOCATION

DATE 5-10-12 PROJ # 1200321

TEST [redacted] # #22 REA [redacted] Rp. MAP UNIT

DTW excavation EQUIP. Geoprobe SURFACE COND. Trees

SURFACE ELEV. 1006.12 DEPTH to BEDROCK DRAWING #

[redacted] DESCRIPTION 200' S. #23

DEPTH (ft)	USCS Class	DESCRIPTION OF USCS PROPERTIES (Depth, USCS Name, Stiffness, Plasticity, Qualifiers, Moisture & Color)	COLOR Matrix	COLOR Mottling	SAMPLE Depth	LOCATION & GENERAL DATA (Site Map, Geology Units, Water Table, Field Tests, Comments)	DEPTH (ft)
0		Topsoil - moist - Dark Brown					0
6"	SP	Sand - moist - medium grained					
1		to fine grained 7.5YR 3/4 Dark Brown				Tree Roots Appeared at 2'	1
18"		Sand - moist medium to fine grained					
2		7.5YR 4/4 Brown					2
3							3
4							4
5							5
6		medium to coarse Sand					6
7							7
8		7.5YR 6/3 Light brown					8
9							9
10							10
11		medium Sand					11
12							12
13							13
13½		becomes more moist					
14		EOBG 15'					14

42"

42

33"

REA SOIL PROFILE/TEST [redacted] LOG

PROJECT Wysocki

LOCATION

DATE 5/10/12 PROJ # 120032.1

TEST [redacted] # #23 REA [redacted] Rp. MAP UNIT

DTW excavation EQUIP. Logger Geoprobe SURFACE COND. Trees/grass.

SURFACE ELEV. 1004.39 DEPTH to BEDROCK DRAWING #

[redacted] DESCRIPTION 200' S #24 Stack 10 45a

DEPTH (ft)	USCS Class	DESCRIPTION OF USCS PROPERTIES (Depth, USCS Name, Stiffness, Plasticity, Qualifiers, Moisture & Color)	COLOR Matrix	COLOR Mottling	SAMPLE Depth	LOCATION & GENERAL DATA (Site Map, Geology Units, Water Table, Field Tests, Comments)	DEPTH (ft)
0	6"	Topsoil sand - moist dark brown.					0
	SP	Sand - moist - medium to fine grained					
1		7.5YR 3/3 Dark Brown					1
	2'						
2		7.5YR 4/4 Brown.					2
3		7.5YR 5/4 Brown.					3
4							4
5		7.5YR 5/8 Strong brown					5
6		7.5YR 6/3 Light brown					6
7							7
8							8
9		Coarse Sand					9
10							10
11							11
12							12
13							13
14		EOB 15'					14

39

37

42

REA SOIL PROFILE/TEST PIT LOG

PROJECT Wysocki
LOCATION
DATE 5-10-12 PROJ #120032.1
TEST [redacted] #24
REA T[redacted] RP.
MAP UNIT
DTW 21.5'
EQUIP. Geoprobe
SURFACE COND. Trees/grass
SURFACE ELEV. 1003.94
DEPTH to BEDROCK
DRAWING #
[redacted] DESCRIPTION 100' W #25

DEPTH (ft)	USCS Class	DESCRIPTION OF USCS PROPERTIES Depth, USCS Name, Stiffness, Plasticity, Qualifiers, Moisture & Color	COLOR Matrix	COLOR Mottling	SAMPLE Depth	LOCATION & GENERAL DATA Site Map, Geology Units, Water Table, Field Tests, Comments	DEPTH (ft)
0	6"	Topsoil - moist - dark brown - sand Roots: grass.					0
1	SP	Sand - moist 7.5YR 3/3 Dark Brown				many Tree Roots.	1
	18"	medium to fine grained					
2	SP	7.5YR 5/6 (Strong brown)					2
3							3
4							4
5							5
6		Some silt					6
7		coarse to medium sand.					7
8		7.5YR 6/4 Light brown. Coarse to medium sand.					8
9							9
10							10
11		7.5YR 5/4 brown					11
12		7.5YR 6/3 Light brown. medium sand - Little fine sand.					12
13							13
14							14
15							15
16							16
17							17
18							18
19							19
20							20
21							21
22		Saturation @ 21½'					22
23							23
24							24
25		EOB @ 24'					25

Page __ of __

REA SOIL PROFILE/TEST PIT LOG

PROJECT Wysocki

LOCATION

DATE 5-10-12 PROJ # 120032.1

TEST [redacted] #25 excavation

REA [redacted] Rp.

MAP UNIT

DTW

EQUIP. Geoprobe Logger

SURFACE COND. Grass/Trees

SURFACE ELEV. 1003.05

DEPTH to BEDROCK

DRAWING #

[redacted] DESCRIPTION 200' N # 23 100' E # 24

DEPTH (ft)	USCS Class	DESCRIPTION OF USCS PROPERTIES Depth, USCS Name, Stiffness, Plasticity, Qualifiers, Moisture & Color	COLOR Matrix	COLOR Mottling	SAMPLE Depth	LOCATION & GENERAL DATA Site Map, Geology Units, Water Table, Field Tests, Comments	DEPTH (ft)
0 6"		Topsoil - Sand - moist - Dark Brown					0
1	SP	Sand - moist - medium to fine grained - little fines - 7.5 YR 3/3 Dark Brown.				many Tree Roots to 5'	1
2							2
3		7.5 YR 5/6 strong brown.					3
4		medium grained					4
5							5
6							6
7							7
8		medium to coarse grained					8
9							9
10							10
11							11
12							12
13							13
14		EOB 15'					14

4

4½

7½

32"

9

REA SOIL PROFILE/TEST PIT LOG

PROJECT Wysocki

LOCATION

DATE 5-10-12 PROJ # 120032.1

TEST [redacted] # 26 excavation

REA [redacted] Rp.

MAP UNIT

DTW

EQUIP. Logger Geoprobe

SURFACE COND. Trees/grass

SURFACE ELEV. 1003.92

DEPTH to BEDROCK

DRAWING #

[redacted] DESCRIPTION 150' South - North Road

DEPTH (ft)	USCS Class	DESCRIPTION OF USCS PROPERTIES Depth, USCS Name, Stiffness, Plasticity, Qualifiers, Moisture & Color	COLOR Matrix	COLOR Mottling	SAMPLE Depth	LOCATION & GENERAL DATA Site Map, Geology Units, Water Table, Field Tests, Comments	DEPTH (ft)
0	6"	Topsoil - Sand - Dark Brown - moist					0
		7.5YR3/4 Dark Brown - Sand moist - medium to fine Grain					1
2							2
		Coarse grained 7.5YR 5/6 Strong Brown.					3
4							4
5							5
6		medium grained 7.5YR 6/4 Light brown					6
7							7
8							8
9							9
10							10
11	1/2	4" grayish brown lense					11
12		medium to coarse grained					12
13							13
14							14
		EOB 15'					15

42"

40"

41"

REA SOIL PROFILE/TEST [redacted] LOG

PROJECT Wy Soche

LOCATION

TEST [redacted] # 27

REA T[redacted] RP

DATE 5/10/12 PROJ # 120032.1

DTW

EQUIP. Geoprobe.

MAP UNIT

SURFACE ELEV. 1005.41

DEPTH to BEDROCK

SURFACE COND. Grass / Trees.

[redacted] DESCRIPTION Parlor Tank

DRAWING #

DEPTH (ft)	USCS Class	DESCRIPTION OF USCS PROPERTIES Depth, USCS Name, Stiffness, Plasticity, Qualifiers, Moisture & Color	COLOR Matrix	COLOR Mottling	SAMPLE Depth	LOCATION & GENERAL DATA Site Map, Geology Units, Water Table, Field Tests, Comments	DEPTH (ft)
0	6"	Topsoil - Sand Dark Brown moist grass, roots.					0
1	18	Sand - few fines - medium grain. moist 7.5YR3/4 (Dark Brown)				many Roots.	1
2	SP	medium to fine sand 10YR6/3 Light Brown still moist					2
3							3
4							4
5							5
6		7.5YR4/6 Strong brown.					6
7							7
8		7.5YR6/3 medium to coarse sand					8
9							9
10							10
11							11
12							12
13							13
14							14
15							15
16							16
17							17
18							18
19							19
20							20
21							21
22		Saturated at 22'					22
23		Coarse Sand					23
24							24
25							25

REA SOIL PROFILE/TEST PIT LOG

PROJECT Wysocki

LOCATION

DATE 5/10/12 PROJ # 120032.1

TEST [redacted] # #28 REA [redacted] Rp MAP UNIT

DTW excavation EQUIP. Logger SURFACE COND. Grass/Trees

SURFACE ELEV. 1008.95 DEPTH to BEDROCK DRAWING #

[redacted] DESCRIPTION 100' West - 300' S #29. start 2:00

DEPTH (ft)	USCS Class	DESCRIPTION OF USCS PROPERTIES (Depth, USCS Name, Stiffness, Plasticity, Qualifiers, Moisture & Color)	COLOR Matrix	COLOR Mottling	SAMPLE Depth	LOCATION & GENERAL DATA (Site Map, Geology Units, Water Table, Field Tests, Comments)	DEPTH (ft)
0	8"	Topsoil sand, dark Brown - moist Roots: grass.					0
1		Sand - moist medium to fine grained 7.5YR3/4 Dark Brown					1
2		7.5YR4/4 (Brown)					2
3		7.5YR5/4 (Brown) Still moist.					3
4							4
5							5
6							6
7							7
8							8
9							9
10							10
11							11
12							12
13							13
14		Not 1/4" Root at 15'				EOB at 15'	14

43"

38"

30"

REA SOIL PROFILE/TEST PIT LOG

PROJECT Wysocki

LOCATION

DATE 5/10/12 PROJ # 120032.1

TEST [redacted] # 29 excavation

REA [redacted] Rp.

MAP UNIT

DTW

EQUIP. Logger Geoprobe

SURFACE COND. Trees / grass.

SURFACE ELEV. 1005.43

DEPTH to BEDROCK

DRAWING #

[redacted] DESCRIPTION 300' S. #30.

DEPTH (ft)	USCS Class	DESCRIPTION OF USCS PROPERTIES Depth, USCS Name, Stiffness, Plasticity, Qualifiers, Moisture & Color	COLOR Matrix	COLOR Mottling	SAMPLE Depth	LOCATION & GENERAL DATA Site Map, Geology Units, Water Table, Field Tests, Comments	DEPTH (ft)
0							0
4"		Topsoil - Dark Brown - Sand moist - Roots, grass.					
	SP	Sand - medium grained 7.5 YR 4/6 (Strong brown) moist.					
1						many Roots to 2'	1
2							2
3		7.5 YR 5/6 Strong brown					3
4							4
5							5
6							6
7		7.5 YR 6/4 light brown still medium grained					7
8							8
9		7.5 YR 5/3 brown					9
10							10
11							11
12							12
13		Coarse grained Sand					13
14						EOB @ 15'	14

38"

39"

34"

REA SOIL PROFILE/TEST [redacted] LOG

PROJECT Wyzoski

LOCATION

DATE 5-10-12 PROJ # 1200321

TEST [redacted] # 30 REA [redacted] MAP UNIT

DTW excavation EQUIP. Geoprobe. Logger SURFACE COND. Trees/Grass.

SURFACE ELEV. 1006.50 DEPTH to BEDROCK DRAWING #

[redacted] DESCRIPTION 200' N Rd - 200' E Hy 13 R/W. Start 1:15 pm

DEPTH (ft)	USCS Class	DESCRIPTION OF USCS PROPERTIES (Depth, USCS Name, Stiffness, Plasticity, Qualifiers, Moisture & Color)	COLOR Matrix	COLOR Mottling	SAMPLE Depth	LOCATION & GENERAL DATA (Site Map, Geology Units, Water Table, Field Tests, Comments)	DEPTH (ft)
0		Topsoil - moist - Sand dark Brown. Roots & grass.					0
1	12" SP 18	sand, medium to fine grained dark Brown - moist					1
2		7.5YR 4/6 (strong brown)					2
3	SP						3
4							4
5		fine grained 7.5 YR 6/4 (Light brown)					5
6							6
7							7
8		Coarse grained 4" Brown lense from 3'-8'-4"				few brown lenses IN profile to 12'	8
9							9
10							10
11							11
12							12
13							13
14		fine grained Sand little silt				EOB @ 15'	14

4'

36

24"

REA SOIL PROFILE/TEST PIT LOG

PROJECT Golden Sands

LOCATION Bunker Silo Area (East End) South - DATE 7/16/12 PROJ #

TEST [redacted] #31 REA [redacted] MAP UNIT 105°F - few high clouds

DTW Excavation EQUIP. Hand Auger Logger SURFACE COND. grass

SURFACE ELEV. 1004.9 DEPTH to BEDROCK DRAWING #

[redacted] DESCRIPTION Open Area 480 W ℄ 210' North Benchmark

DEPTH (ft)	USCS Class	DESCRIPTION OF USCS PROPERTIES (Depth, USCS Name, Stiffness, Plasticity, Qualifiers, Moisture & Color)	COLOR Matrix	COLOR Mottling	SAMPLE Depth	LOCATION & GENERAL DATA (Site Map, Geology Units, Water Table, Field Tests, Comments)	DEPTH (ft)
0	SP	Sand - few Roots 10YR5/3 Brown - Very Dry - single grain - fine to medium Texture.					0
1							1
2							2
3"		7.5YR 5/6 Strong brown moist to dry medium Texture					
3							3
4							4
5		7.5YR5/4 Brown.					5
6							6
7							7
8							8
9							9
10							10
11		EOB 11'					11
12							12
13							13
14							14

REA SOIL PROFILE/TEST PIT LOG

PROJECT Golden Sands

LOCATION Bunker Silo Area

DATE 7/16/12 PROJ #

TEST [redacted] # 32

REA [redacted] Rp

MAP UNIT

DTW excavation

EQUIP. Logger Handauger

SURFACE COND. Grass; undergrowth

SURFACE ELEV. 1004.7

DEPTH to BEDROCK

DRAWING #

[redacted] DESCRIPTION 210' N # 31

DEPTH (ft)	USCS Class	DESCRIPTION OF USCS PROPERTIES Depth, USCS Name, Stiffness, Plasticity, Qualifiers, Moisture & Color	COLOR Matrix	COLOR Mottling	SAMPLE Depth	LOCATION & GENERAL DATA Site Map, Geology Units, Water Table, Field Tests, Comments	DEPTH (ft)
0		Sand - fine grained 10YR 4/6 yellowish brown Dry					0
1	SP						1
2	2½'	Becomes moist-medium texture 7.5YR 5/6 Strong brown					2
3							3
4							4
5		Becomes moist					5
6							6
7		Becomes moist					7
8							8
9							9
10							10
11		EOB- 11'					11
12							12
13							13
14							14

REA SOIL PROFILE/TEST PIT LOG PROJECT Golden Sands

LOCATION Bunker N.E Corner DATE 7/16/17 PROJ #

TEST [redacted] # 33 REA [redacted] RP. MAP UNIT

DTW excavation EQUIP. Logger Hand auger SURFACE COND.

SURFACE ELEV. 1004.5 DEPTH to BEDROCK DRAWING #

[redacted] DESCRIPTION 180' N #32 450' W Section Line bench mark.

DEPTH (ft)	USCS Class	DESCRIPTION OF USCS PROPERTIES Depth, USCS Name, Stiffness, Plasticity, Qualifiers, Moisture & Color	COLOR Matrix	COLOR Mottling	SAMPLE Depth	LOCATION & GENERAL DATA Site Map, Geology Units, Water Table, Field Tests, Comments	DEPTH (ft)
0							0
	SP	Sand. Poorly graded - fine 7.5YR 4/3 Brown					
1							1
2							2
3		becomes moist medium grain 10YR 4/4 dark Yellowish brown.					3
4							4
5		10YR 5/6 Strong browns.				grains Are Various colors color is dominant color.	5
6							6
7							7
	7½	10YR 5/4 yellowish brown					
8							8
9							9
10							10
11		EOB @ 11'					11
12							12
13							13
14							14

RESOURCE ENGINEERING ASSOCIATES INC

Soil Profile Log

LOCATION:	DATE: 5/20/13	Project: Golden Sands
TEST EXCAVATION #: #34 (near E/W Rd)	LOGGER: Ro.	PROJECT #: 120032-1
SURFACE ELEVATION: 1004.22	EQUIPMENT: Geoprobe	MAP UNIT:
DEPTH to SATURATION: 24'-3. 24.25	DEPTH to BEDROCK:	SURFACE CONDITION: Plantation
DESCRIPTION: 2-40s West of Hwy 173 IN N/S fire Rd. START 1045 - END.		DRAWING #:

DEPTH (ft)	USCS Class	DESCRIPTION OF USCS PROPERTIES: Depth, USCS Name, Structure, Plasticity, Strength, Moisture & Color	MUNSELL COLOR Matrix	MUNSELL COLOR Mottles	Sample Depth	COMMENTS & NOTES: Saturation Type, Bedrock Type, Field Tests, & Other Comments/Notes	DEPTH (ft)
	6"	Topsoil Sand with Trace silt					
1	SP.	Sand with few fines - medium. moist				5YR 4/4 reddish brown.	1
2	5"						2
3	SP	Sand with few fines - moist				7.5YR 4/6 Strong brown	3
4							4
5	7"	1/2" black organic layer with medium sand - moist					5
6	SP	medium sand - few fines - poorly graded. - moist				7.5YR 6/3 Light brown	6
7						Color uniform to saturated ZONE	7
8							8
9							9
10							10
11							11
12							12
13							13
14		3/4" ϕ gravel					14
15							15
16							16
17							17
18							18
19							19
20							20
21							21
22							22
23						waited 15 min - now at 8" (24'-4")	23
24		urated EOB at 25'				9" H2O @ 24.3' @ Time ϕ 7.5YR5/3 brown	24
25							25

46"

32

25

25"

RESOURCE ENGINEERING ASSOCIATES INC

Soil Profile Log

LOCATION:	DATE: 5/20/13	Project: Golden Sands.
TEST EXCAVATION #: #35	LOGGER: Rp.	PROJECT #:
SURFACE ELEVATION: 1002.82	EQUIPMENT: Geoprobe	MAP UNIT:
DEPTH to SATURATION: 23'-9" 23.75'	DEPTH to BEDROCK:	SURFACE CONDITION:
DESCRIPTION: North #34.		DRAWING #: END 1055

DEPTH (ft)	USCS Class	DESCRIPTION OF USCS PROPERTIES Depth, USCS Name, Structure, Plasticity, Strength, Moisture & Color	MUNSELL COLOR Matrix	Mottles	Sample Depth	COMMENTS & NOTES Saturation Type, Bedrock Type, Field Tests, & Other Comments/Notes	DEPTH (ft)
	7"	Topsoil, dark Brown medium Sand Trace silt - moist					
1	SP	medium sand, moist single grain				10YR3/6 dark yellow brown	1
2							2
3							3
4		10YR4/4 dark yellow brown					4
5	8"	1" Layer plant organic matter				10YR4/6 dark yellow brown	5
6						10YR5/4 yellow brown.	6
7							7
8							8
9							9
10		medium to fine sand poorly graded					10
11		Coarse to medium sand - Poorly graded Still moist					11
12							12
13							13
14							14
15							15
16							16
17							17
18							18
19							19
20							20
21							21
22							22
23		23'-9"				Water Saturation at 23'-9"	23
24	4"	4" Layer Dark yellow brown.				10YR4/6 Dark Yellow brown	24
25		10YR 5/4 yellow brown - saturated-				EO Bat 25'	25

47"
30"
27"
28"
30"

RESOURCE ENGINEERING ASSOCIATES INC

Soil Profile Log

Project: Golden Sands		
LOCATION:	DATE: 5/20/13	PROJECT #:
TEST EXCAVATION #: 36.	LOGGER: RP.	MAP UNIT:
SURFACE ELEVATION: 1002'-94"	EQUIPMENT: Geoprobe.	SURFACE CONDITION:
DEPTH to SATURATION: 23'-2" 23.17'	DEPTH to BEDROCK: .	DRAWING #:

DESCRIPTION: North #35 - IN Fire Rd. (250 N #35) Start 11:00

DEPTH (ft)	USCS Class	DESCRIPTION OF USCS PROPERTIES Depth, USCS Name, Structure, Plasticity, Strength, Moisture & Color	MUNSELL COLOR Matrix	MUNSELL COLOR Mottles	Sample Depth	COMMENTS & NOTES Saturation Type, Bedrock Type, Field Tests, & Other Comments/Notes	DEPTH (ft)
	9"	TopSoil moist Sand w/Trace fines					
1	SP	Sand - medium - Poorly graded - Trace fines moist - Single grain.				7.5YR3/4 dark brown.	1
2							2
49" 3							3
4		10YR5/3 brown.					4
	SP						
7 5							5
6							6
		2" Lense. 10YR4/6 Dark yellowbrown					
23" 7		Still moist				10 R 4/3 brown.	7
8							8
9							9
10							10
11							11
12							12
35" 13							13
14							14
15							15
16							16
27 17							17
18							18
19							19
20							20
21							21
33 22						note: Hole was caving	22
23		23'-2" W.L. at 15min				Saturated at	23
	10"	wet					
24		saturated				10YR4/3 Brown.	24
25		EOB at 25'					25

RESOURCE ENGINEERING ASSOCIATES INC

Soil Profile Log

LOCATION:	DATE: 5/20/13	Project:	
TEST EXCAVATION #: #37	LOGGER: Rp.	PROJECT #: Golden Sands	
SURFACE ELEVATION: 1002-34"	EQUIPMENT: Geoprobe	MAP UNIT:	
DEPTH to SATURATION: 22-6" 22.5'	DEPTH to BEDROCK:	SURFACE CONDITION:	
DESCRIPTION: 250 N #36.		DRAWING #: END 1205	

DEPTH (ft)	USCS Class	DESCRIPTION OF USCS PROPERTIES Depth, USCS Name, Structure, Plasticity, Strength, Moisture & Color	MUNSELL COLOR Matrix	MUNSELL COLOR Mottles	Sample Depth	COMMENTS & NOTES Saturation Type, Bedrock Type, Field Tests, & Other Comments/Notes	DEPTH (ft)
	9"	Topsoil - dark brown. moist.					
1	SP	Sand. Poorly graded.- moist Single grain - medium to fine				10YR 3/6 Dark yellow brown	1
2	3	Slightly lighter color				10YR 5/4 Yellow brow	2
3	SP						3
4						10YR 4/6 Dark yellow brow	4
5	6"	1" Dark Brown organic layer					5
6		10YR 4/6.					6
7		10YR 4/4 Dark yellow brown					7
8							8
9							9
10		10YR 4/6 Dark yellowbrown					10
11		10YR 4/3 brown coarse to medium Sill moist					11
12							12
13							13
14							14
15							15
16							16
17							17
18							18
19							19
20							20
21							21
22		W.L 22½' at 15 min					22
23						Hole Caves IN.	23
24		Saturated. medium grained EOB - 25'					24
25							25

49"
34"
30
29
29

1'3
1'3
2'6

RESOURCE ENGINEERING ASSOCIATES INC.

Soil Profile Log

Project: Golden Sands			
LOCATION:	DATE: 5/20/13	PROJECT #:	
TEST EXCAVATION #: #38.	LOGGER: RP	MAP UNIT:	
SURFACE ELEVATION: 1005.00"	EQUIPMENT: Geoprobe	SURFACE CONDITION:	
DEPTH to SATURATION: 24' - 2" 24.17'	DEPTH to BEDROCK:	DRAWING #:	

DESCRIPTION: New Row - going South. (100' w Fire Rd). Start 12 45 END 12 10

DEPTH (ft)	USCS Class	DESCRIPTION OF USCS PROPERTIES Depth, USCS Name, Structure, Plasticity, Strength, Moisture & Color	MUNSELL COLOR Matrix	MUNSELL COLOR Mottles	Sample Depth	COMMENTS & NOTES Saturation Type, Bedrock Type, Field Tests, & Other Comments/Notes	DEPTH (ft)
	8"	Topsoil. dark brown. moist,					
45"	SP	Sand Poorly graded, moist medium to fine grained				5YR 3/3 dark Reddish brown	
						10YR 5/4 yellow brown	
	6"	10YR 3/4 Dark Yellow brown					
	SM	Sand with silt. moist - medium grained				not ½" Layer plant organic material	
32	SP	Sand - moist - poorly graded				10YR 4/3 brown	
30							
27							
					30	plug.	
30"		still moist.					
		Saturated 24' - 2".				3" slurf 7" 10"	
		W.L at 15 min. 24' - 2"					

RESOURCE ENGINEERING ASSOCIATES INC

Soil Profile Log

Project: Golden Sands.		
LOCATION:	**DATE:** 5/20/13	**PROJECT #:**
TEST EXCAVATION #: # 39	**LOGGER:** RP	**MAP UNIT:**
SURFACE ELEVATION: 1002.03	**EQUIPMENT:** Geoprobe.	**SURFACE CONDITION:** GRASS
DEPTH to SATURATION: 2' - 8" 22.67'	**DEPTH to BEDROCK:**	**DRAWING #:**
DESCRIPTION: 200' W #38	Start 140 - End -	

DEPTH (ft)	USCS Class	DESCRIPTION OF USCS PROPERTIES Depth, USCS Name, Structure, Plasticity, Strength, Moisture & Color	MUNSELL COLOR Matrix	MUNSELL COLOR Mottles	Sample Depth	COMMENTS & NOTES Saturation Type, Bedrock Type, Field Tests, & Other Comments/Notes	DEPTH (ft)
	9"	Topsoil - dark brown, moist little Silt.					
1	SP	Sand, Poorly graded moist single grain - medium to fine				7.5YR 3/2 dark brown	1
2							2
3		10YR 5/4 brown					3
4							4
5							5
6							6
7							7
8							8
9							9
10							10
11							11
12							12
13							13
14							14
15							15
16		fine grained					16
17							17
18							18
19							19
20		medium grained					20
21							21
22							22
23	8"	2'-4" Saturated					23
24							24
25		EOB at 25'					25

48"
22"
26"
24"

RESOURCE ENGINEERING ASSOCIATES INC

Soil Profile Log

Project: Golden Sands.		
LOCATION:	**DATE:** 5/20/13	**PROJECT #:**
TEST EXCAVATION #: # 40	**LOGGER:** DW/RP.	**MAP UNIT:**
SURFACE ELEVATION: 1003.03	**EQUIPMENT:** Geoprobe	**SURFACE CONDITION:**
DEPTH to SATURATION: 25'	**DEPTH to BEDROCK:**	**DRAWING #:**
DESCRIPTION: S. # 39 ~ 300'.		

DEPTH (ft)	USCS Class	DESCRIPTION OF USCS PROPERTIES Depth, USCS Name, Structure, Plasticity, Strength, Moisture & Color	MUNSELL COLOR Matrix	Mottles	Sample Depth	COMMENTS & NOTES Saturation Type, Bedrock Type, Field Tests, & Other Comments/Notes	DEPTH (ft)
	9"	Topsoil, dark brown Sand, Trace silt moist					
45"	SP	Sand, medium to fine, Trace silt. moist.				7.5YR 4/4 brown	
	6"	Sand, med. to fine. moist					
						7.5YR 6/3 light brown	
						5YR 5/8 Yellowish Red	
29"							
						7.5YR 5/8 Strong brown.	
		still moist, medium to fine grain.				7.5YR 5/4. brown.	
25"							
28							
1							
31							
		WET					
		saturated @ 25'					

RESOURCE ENGINEERING ASSOCIATES, INC.

Soil Profile Log

LOCATION:	DATE: 5/20/13	Project: Golden Sands.
TEST EXCAVATION #: SB #41	LOGGER: DW / RP	PROJECT #:
SURFACE ELEVATION: 1002.64	EQUIPMENT: Geoprobe.	MAP UNIT:
DEPTH to SATURATION: 23.8'	DEPTH to BEDROCK:	SURFACE CONDITION:
DESCRIPTION: 300' S #40.		DRAWING #:

DEPTH (ft)	USCS Class	DESCRIPTION OF USCS PROPERTIES Depth, USCS Name, Structure, Plasticity, Strength, Moisture & Color	MUNSELL COLOR Matrix	Mottles	Sample Depth	COMMENTS & NOTES Saturation Type, Bedrock Type, Field Tests, & Other Comments/Notes	DEPTH (ft)
		9" Topsoil Sand some silt					
1	SP	Sand medium to fine moist				7.5YR 4/4 Brown	1
2							2
3	SP	Sand medium to fine moist				10YR 6/6 Yellowish Brown	3
4							4
5							5
6							6
7							7
8							8
9							9
10							10
11							11
12							12
13							13
14							14
15							15
16							16
17							17
18							18
19							19
20							20
21		some gravel					21
22							22
23		wet → saturated					23
24							24
25		EOB 25'					25

44"
24"
30"
24"
28"

RESOURCE ENGINEERING ASSOCIATES, INC.

Soil Profile Log

Project: Golden Sands		
LOCATION:	DATE: 5/20/13	PROJECT #:
TEST EXCAVATION #: SB 42	LOGGER: DW/RP	MAP UNIT:
SURFACE ELEVATION: 1002.22	EQUIPMENT: GeoProbe	SURFACE CONDITION:
DEPTH to SATURATION: 23.4	DEPTH to BEDROCK:	DRAWING #:
DESCRIPTION: 200' S SB 41		

DEPTH (ft)	USCS Class	DESCRIPTION OF USCS PROPERTIES Depth, USCS Name, Structure, Plasticity, Strength, Moisture & Color	MUNSELL COLOR Matrix	Mottles	Sample Depth	COMMENTS & NOTES Saturation Type, Bedrock Type, Field Tests, & Other Comments/Notes	DEPTH (ft)
		9" Topsoil Dark Brown Sand					
1	SP	Sand medium to fine				7.5YR 4/4 Brown	1
2							2
3	SP	Sand medium to fine moist				10YR 6/4 to yellowish brown	3
4							4
5	SP	Sand medium to fine moist					5
6							6
7							7
8							8
9							9
10							10
11							11
12							12
13							13
14							14
15							15
16							16
17							17
18							18
19							19
20							20
21							21
22							22
23		saturation 19" @ 23.4					23
		TD 23'					24
							25

48"
25"
29"
28"
28"

RESOURCE ENGINEERING ASSOCIATES INC

Soil Profile Log

LOCATION:	DATE: 5/20/13	Project: Golden Sands
TEST EXCAVATION #: #43	LOGGER: (RD) / D.W	PROJECT #: 1200
SURFACE ELEVATION: 1003.21	EQUIPMENT: Geoprobe	MAP UNIT:
DEPTH to SATURATION: 25'	DEPTH to BEDROCK:	SURFACE CONDITION:
DESCRIPTION: S.#42 200'	START 5:00	DRAWING #:

DEPTH (ft)	USCS Class	DESCRIPTION OF USCS PROPERTIES Depth, USCS Name, Structure, Plasticity, Strength, Moisture & Color	MUNSELL COLOR Matrix	MUNSELL COLOR Mottles	Sample Depth	COMMENTS & NOTES Saturation Type, Bedrock Type, Field Tests, & Other Comments/Notes	DEPTH (ft)
	10	Topsoil - Sand with trace silt moist - Dark Brown					
1	SP	Sand, Poorly graded, medium grain few fines, moist				7.5YR3/4 dark brown	1
2							2
3							3
4		10YR4/4 dark yellow brown					4
5		10YR5/3 Brown. still moist					5
6							6
7							7
8							8
9							9
10							10
11							11
12							12
13							13
14							14
15							15
16							16
17							17
18							18
19							19
20							20
21							21
22							22
23	SP	Still SP. & moist.				waited 15 min. water level at bottom.	23
24		wet Saturated at 25'.					24
25							25

48"

25

27

29"

RESOURCE ENGINEERING ASSOCIATES INC.

Soil Profile Log

Project: Golden Sands.		
LOCATION:	DATE: 5/20/13	PROJECT #:
TEST EXCAVATION #: #44	LOGGER: KP	MAP UNIT:
SURFACE ELEVATION: 1004.81	EQUIPMENT: Geoprobe	SURFACE CONDITION:
DEPTH to SATURATION:	DEPTH to BEDROCK:	DRAWING #:

DESCRIPTION: 150' S. #43

DEPTH (ft)	USCS Class	DESCRIPTION OF USCS PROPERTIES: Depth, USCS Name, Structure, Plasticity, Strength, Moisture & Color	MUNSELL COLOR: Matrix	MUNSELL COLOR: Mottles	Sample Depth	COMMENTS & NOTES: Saturation Type, Bedrock Type, Field Tests, & Other Comments/Notes	DEPTH (ft)
46"	8"	Topsoil Sand with some silt - dark brown. moist					
	SP	Sand - Poorly graded. Few Silt moist medium grain				7.5YR 3/4 Dark Brown	
						10YR 4/4 Dark Yellow Brown	
25"							
25							
25							
		still moist, still SP.					
23							
		10YR5/3 brown					
		Note: Dry at bottom				EOB@25'	

11

RESOURCE ENGINEERING ASSOCIATES INC.

Soil Profile Log

LOCATION:	DATE: 5/21/13	Project: Golden Sands
TEST EXCAVATION #: # 45	LOGGER: RP	PROJECT #:
SURFACE ELEVATION: 1002.03	EQUIPMENT: Geoprobe	MAP UNIT:
DEPTH to SATURATION: 25'10" 25.83	DEPTH to BEDROCK:	SURFACE CONDITION: Grass
DESCRIPTION: 6015 W - 22240 - South side	Start 7:40 a.m	DRAWING #: 65° overcast

DEPTH (ft)	USCS Class	DESCRIPTION OF USCS PROPERTIES Depth, USCS Name, Structure, Plasticity, Strength, Moisture & Color	MUNSELL COLOR Matrix	MUNSELL COLOR Mottles	Sample Depth	COMMENTS & NOTES Saturation Type, Bedrock Type, Field Tests, & Other Comments/Notes	DEPTH (ft)
	8"	Top Soil - Sand medium to fine with trace silt - moist Dark Brown					
1	SP	Sand, medium to fine grained trace silt - moist				10YR 3/6 dark yellow brown	1
2		10YR 5/4 yellowish brown.					2
3							3
4							4
5							5
6							6
7							7
8							8
9							9
10							10
11							11
12							12
13							13
14		Few gravel 1/2" ø					14
15							15
16							16
17							17
18							18
19		(Texture & color similar) still moist.					19
20							20
21							21
22							22
23							23
24	2"	becomes wet.					24
25							

45 — 23" — 30" — 24" — 28"

RESOURCE ENGINEERING ASSOCIATES INC.

Soil Profile Log

Project: Golden Sands		
LOCATION:	**DATE:** 5/21/13	**PROJECT #:**
TEST EXCAVATION #: #45 continued	**LOGGER:** RD	**MAP UNIT:**
SURFACE ELEVATION:	**EQUIPMENT:** Geoprobe	**SURFACE CONDITION:**
DEPTH to SATURATION:	**DEPTH to BEDROCK:**	**DRAWING #:**

DESCRIPTION: END 815 am

DEPTH (ft)	USCS Class	DESCRIPTION OF USCS PROPERTIES Depth, USCS Name, Structure, Plasticity, Strength, Moisture & Color	MUNSELL COLOR Matrix	Mottles	Sample Depth	COMMENTS & NOTES Saturation Type, Bedrock Type, Field Tests, & Other Comments/Notes	DEPTH (ft)
	SP	Sand, medium to fine grained Some silt Saturated.					
26 1'	ML	Silt - little clay, Saturated Soft, massive 10YR4/3 brown			X	Standing water after 15 min. at 25'-10"	
27 2'	SP	Sand - medium to fine grained Trace Silt - Saturated 10YR3/6 Dark Yellow brown.					
28 3'							
29 4'							
30 5'		EOB at 30'				2'-3" 1'-11" 4'-2"	
6							
7							
8							
9							
10							
11							
12							
13							
14							
15							
16							
17							
18							
19							
20							
21							
22							
23							
24							
25							

17b

RESOURCE ENGINEERING AND TAILS INC.

Soil Profile Log

Project: Golden Sands		
LOCATION:	**DATE:** 5/21/13	**PROJECT #:**
TEST EXCAVATION #: #46	**LOGGER:** RP	**MAP UNIT:**
SURFACE ELEVATION: 1002.32	**EQUIPMENT:** Geoprobe	**SURFACE CONDITION:**
DEPTH to SATURATION: 25' - 10" 25.83	**DEPTH to BEDROCK:**	**DRAWING #:**

DESCRIPTION: 250' N # 45 Start 830 am

DEPTH (ft)	USCS Class	DESCRIPTION OF USCS PROPERTIES Depth, USCS Name, Structure, Plasticity, Strength, Moisture & Color	MUNSELL COLOR Matrix	MUNSELL COLOR Mottles	Sample Depth	COMMENTS & NOTES Saturation Type, Bedrock Type, Field Tests, & Other Comments/Notes	DEPTH (ft)
	8"	Top Soil, moist, Sand medium to fine Grained dark brown					
	SP	Sand- medium to fine, moist 10YR3/4 Dark yellow brown.					
		10YR4/4 Dark yellow brown.					
		10YR5/3 brown					
	9"	wet					

(18)

RESOURCE ENGINEERING ASSOCIATES, INC.

Soil Profile Log

Project: Golden Sands		
LOCATION:	DATE: 5/21/13	PROJECT #:
TEST EXCAVATION #: #46 continued	LOGGER: RP	MAP UNIT:
SURFACE ELEVATION:	EQUIPMENT: Geoprobe	SURFACE CONDITION:
DEPTH to SATURATION: 25'-10"	DEPTH to BEDROCK:	DRAWING #:
DESCRIPTION:	END 850	

DEPTH (ft)	USCS Class	DESCRIPTION OF USCS PROPERTIES Depth, USCS Name, Structure, Plasticity, Strength, Moisture & Color	MUNSELL COLOR Matrix	Mottles	Sample Depth	COMMENTS & NOTES Saturation Type, Bedrock Type, Field Tests, & Other Comments/Notes	DEPTH (ft)
	10"	Sand, medium to fine grained saturated at 25'-10".				2'-6" stuff + 1'-8" water 4'-2" water level at ~5 min	
		EOB at 30'					

186

RESOURCE ENGINEERING ASSOCIATES INC

Soil Profile Log

Project: Golden Sands		
LOCATION:	DATE: 5/21/13	PROJECT #:
TEST EXCAVATION #: #47	LOGGER: Rp.	MAP UNIT:
SURFACE ELEVATION: 1002.93	EQUIPMENT: Geoprobe	SURFACE CONDITION:
DEPTH to SATURATION: 27'-0"	DEPTH to BEDROCK:	DRAWING #:
DESCRIPTION: 200' N #46		

DEPTH (ft)	USCS Class	DESCRIPTION OF USCS PROPERTIES Depth, USCS Name, Structure, Plasticity, Strength, Moisture & Color	MUNSELL COLOR Matrix	Mottles	Sample Depth	COMMENTS & NOTES Saturation Type, Bedrock Type, Field Tests, & Other Comments/Notes	DEPTH (ft)
	6"	Topsoil - Sand, med to fine, Trace silt moist - dark brown					
	SP	Sand - medium to fine, Trace silt moist 10YR3/4 Dark Yellow brown.					
		10YR5/4 yellow brown					
		few gravel, ½" ϕ Quartzite					

39"
26"
28"
27"
25"

RESOURCE ENGINEERING ASSOCIATES, INC.

Soil Profile Log

LOCATION:	DATE: 5/21/13	Project: Golden Sands
TEST EXCAVATION #: #47 Continued	LOGGER: RP	PROJECT #:
SURFACE ELEVATION:	EQUIPMENT: Geoprobe	MAP UNIT:
DEPTH to SATURATION:	DEPTH to BEDROCK:	SURFACE CONDITION:
DESCRIPTION:	END 9 25	DRAWING #:

DEPTH (ft)	USCS Class	DESCRIPTION OF USCS PROPERTIES Depth, USCS Name, Structure, Plasticity, Strength, Moisture & Color	MUNSELL COLOR Matrix	Mottles	Sample Depth	COMMENTS & NOTES Saturation Type, Bedrock Type, Field Tests, & Other Comments/Notes	DEPTH (ft)
		Sand, medium to fine grained, Saturated					
1		10 YR 4/4 Dark yellow brown					1
2	∇	27' standing water at 10 min!				2' - 3" Sluff	2
3						- 9"	3
4						3' - 0"	4
5		EOB at 30'					5
6							6
7							7
8							8
9							9
10							10
11							11
12							12
13							13
14							14
15							15
16							16
17							17
18							18
19							19
20							20
21							21
22							22
23							23
24							24
25							25

43"

RESOURCE ENGINEERING ASSOCIATES INC

Soil Profile Log

Project: Golden Sands.		
LOCATION:	**DATE:** 5/21/13	**PROJECT #:**
TEST EXCAVATION #: # 48	**LOGGER:** RD	**MAP UNIT:**
SURFACE ELEVATION: 1003.66	**EQUIPMENT:** Geoprobe.	**SURFACE CONDITION:**
DEPTH to SATURATION: 24'9" 24.75'	**DEPTH to BEDROCK:**	**DRAWING #:**

DESCRIPTION: N # 47 225' Start 940 am END 955

DEPTH (ft)	USCS Class	DESCRIPTION OF USCS PROPERTIES Depth, USCS Name, Structure, Plasticity, Strength, Moisture & Color	MUNSELL COLOR Matrix	MUNSELL COLOR Mottles	Sample Depth	COMMENTS & NOTES Saturation Type, Bedrock Type, Field Tests, & Other Comments/Notes	DEPTH (ft)
	8	Top Soil - Sand - medium to fine, trace silt, moist - Dark Brown.					
1	SP	Sand, Trace silt, medium to fine gravel - Poorly graded - moist					1
2		10YR4/4 Dark yellow brown					2
3		10YR4/6 Dark yellow brown					3
4							4
5		10YR5/4 Yellow brown.					5
6							6
7							7
8							8
9							9
10							10
11							11
12							12
13							13
14							14
15							15
16							16
17							17
18							18
19							19
20							20
21							21
22							22
23							23
24	9"	Saturated at 24'-9"				water level at 5 min. RD	24
25							25

41"
26"
26"
27"
27"

RESOURCE ENGINEERING AND TAILS, INC.

Soil Profile Log

Project: Golden Sands.		
LOCATION:	**DATE:** 5/21/13	**PROJECT #:**
TEST EXCAVATION #: #49	**LOGGER:** RP.	**MAP UNIT:**
SURFACE ELEVATION: 1001.79	**EQUIPMENT:** Geoprobe.	**SURFACE CONDITION:** GRASS.
DEPTH to SATURATION: 23-5'	**DEPTH to BEDROCK:**	**DRAWING #:**

DESCRIPTION: 250' N #48. START 10'5 - END - 1040

DEPTH (ft)	USCS Class	DESCRIPTION OF USCS PROPERTIES: Depth, USCS Name, Structure, Plasticity, Strength, Moisture & Color	MUNSELL COLOR: Matrix	MUNSELL COLOR: Mottles	Sample Depth	COMMENTS & NOTES: Saturation Type, Bedrock Type, Field Tests, & Other Comments/Notes	DEPTH (ft)
	7"	TopSoil Sand w/Trace silt, medium to fine grained - moist Dark Brown					
42"	SP	Sand, medium to fine grained, trace silt. Poorly graded. moist Dark yellow brown.					
		10 YR 5/4 yellow brown					
28"							
29"		few 1/4" gravel.					
27"							
27"		Saturated at 1'-5"					
		EOB @ 25'				8" 9" Stuff 15" @ 5 min	

21

RESOURCE ENGINEERING ASSOCIATES, INC.

Soil Profile Log

Project: Golden Sands.		
LOCATION:	**DATE:** 5/20/13	**PROJECT #:**
TEST EXCAVATION #: #50	**LOGGER:** RP.	**MAP UNIT:**
SURFACE ELEVATION: 1001.98	**EQUIPMENT:** Geoprobe.	**SURFACE CONDITION:**
DEPTH to SATURATION:	**DEPTH to BEDROCK:**	**DRAWING #:**

DESCRIPTION: IN Fire Rd - E #49.

DEPTH (ft)	USCS Class	DESCRIPTION OF USCS PROPERTIES Depth, USCS Name, Structure, Plasticity, Strength, Moisture & Color	MUNSELL COLOR Matrix	MUNSELL COLOR Mottles	Sample Depth	COMMENTS & NOTES Saturation Type, Bedrock Type, Field Tests, & Other Comments/Notes	DEPTH (ft)
1	12"	Topsoil. Sand moist, dark Brown. Trace silt					1
1	SP	Sand, medium to fine grain moist Trace silt				10YR3/3 Dark brown.	1
2							2
47						10YR4/4 Dark yellow brown.	
3							3
4							4
5						10YR4/6 Dark yellowbrown	5
6							6
7							7
8							8
9							9
10							10
11							11
12							12
13		Coarse grained sand				(No color change).	13
14		fine to medium grained Sand.				EOB@ 15'	14
15							15

RESOURCE ENGINEERING ASSOCIATES, INC.

Soil Profile Log

Project: Golden Sands		
LOCATION:	**DATE:** 5/20/13	**PROJECT #:**
TEST EXCAVATION #: #51	**LOGGER:** RD.	**MAP UNIT:**
SURFACE ELEVATION: 1003.33	**EQUIPMENT:** Geoprobe.	**SURFACE CONDITION:**
DEPTH to SATURATION:	**DEPTH to BEDROCK:**	**DRAWING #:**

DESCRIPTION: E #50 ~400' N ~ E/W Fire Rd End.

DEPTH (ft)	USCS Class	DESCRIPTION OF USCS PROPERTIES Depth, USCS Name, Structure, Plasticity, Strength, Moisture & Color	MUNSELL COLOR Matrix	MUNSELL COLOR Mottles	Sample Depth	COMMENTS & NOTES Saturation Type, Bedrock Type, Field Tests, & Other Comments/Notes	DEPTH (ft)
	6"	Top Soil, Sand with Trace silt Dark Brown. moist					
1		Sand, medium grain, Trace silt				10YR3/4 dark brown	1
	SP.	Poorly graded moist					
2							2
4.5"		10YR5/4 Yellowish brown					
3							3
4							4
5							5
6							6
7							7
25 8							8
9	2"	10YR4/6 Yellowish Red				(likely end of Root Zone)?	9
10		10YR5/4 Yellowish brown. Still moist. medium to fine grain					10
11							11
12							12
27 13							13
14							14
15						EOB at 15'	15

RESOURCE ENGINEERING ASSOCIATES, INC.

Soil Profile Log

Project: Golden Sands.		
LOCATION:	**DATE:** 5/20/13	**PROJECT #:**
TEST EXCAVATION #: #52	**LOGGER:** RP.	**MAP UNIT:**
SURFACE ELEVATION: 1005.71	**EQUIPMENT:** Geoprobe.	**SURFACE CONDITION:** grass.
DEPTH to SATURATION: N.A.	**DEPTH to BEDROCK:**	**DRAWING #:**
DESCRIPTION: 270' E #51		

DEPTH (ft)	USCS Class	DESCRIPTION OF USCS PROPERTIES Depth, USCS Name, Structure, Plasticity, Strength, Moisture & Color	MUNSELL COLOR Matrix	MUNSELL COLOR Mottles	Sample Depth	COMMENTS & NOTES Saturation Type, Bedrock Type, Field Tests, & Other Comments/Notes	DEPTH (ft)
	10	Topsoil, Black. moist sand with Trace Silt					
1	SP	Sand, Poorly graded, moist, medium to fine grained				10YR 3/6 Dark yellow brown	1
2		10YR 5/3 brown					2
3							3
4							4
5							5
6							6
7							7
8							8
9							9
10							10
11							11
12							12
13							13
14							14
15						EOB @ 15'	15

4.5'

22'

30'

RESOURCE ENGINEERING ASSOCIATES, INC.

Soil Profile Log

Project: Golden Sands.		
LOCATION:	**DATE:** 5/20/13	**PROJECT #:**
TEST EXCAVATION #: #53	**LOGGER:** RP.	**MAP UNIT:**
SURFACE ELEVATION: 1005.98	**EQUIPMENT:** Geoprobe	**SURFACE CONDITION:**
DEPTH to SATURATION:	**DEPTH to BEDROCK:**	**DRAWING #:**

DESCRIPTION: 300' E #52

DEPTH (ft)	USCS Class	DESCRIPTION OF USCS PROPERTIES Depth, USCS Name, Structure, Plasticity, Strength, Moisture & Color	MUNSELL COLOR Matrix	MUNSELL COLOR Mottles	Sample Depth	COMMENTS & NOTES Saturation Type, Bedrock Type, Field Tests, & Other Comments/Notes	DEPTH (ft)
	9"	Top Soil. Sand with Trace silt moist medium to fine grained					
1	SP.	Sand with Trace Silt, Poorly graded moist, fine grained to medium. 10 YR 3/4 dark yellow brown					1
2							2
3		10 YR 5/4 yellow brown					3
4							4
5		10 YR 5/3 brown					5
6							6
7							7
8							8
9	1"	1 Lense orange color.					9
10							10
11							11
12							12
13							13
14							14
15		EOB at 15'					15

41

23"

25"

15

RESOURCE ENGINEERING ASSOCIATES, INC.

Soil Profile Log

LOCATION:	DATE: 5/20/13	Project: Gold. Sand S
TEST EXCAVATION #: # 54	LOGGER: TP.	PROJECT #:
SURFACE ELEVATION: 1005.ft	EQUIPMENT: Geoprobe.	MAP UNIT:
DEPTH to SATURATION:	DEPTH to BEDROCK:	SURFACE CONDITION: Brush.
DESCRIPTION: 300' E #53		DRAWING #:

DEPTH (ft)	USCS Class	DESCRIPTION OF USCS PROPERTIES Depth, USCS Name, Structure, Plasticity, Strength, Moisture & Color	MUNSELL COLOR Matrix	Mottles	Sample Depth	COMMENTS & NOTES Saturation Type, Bedrock Type, Field Tests, & Other Comments/Notes	DEPTH (ft)
		Top Soil. - Sandy, with some silt, moist					
	8'						
1	SP	Sand with trace silt, moist medium to fine grain.				10YR4/4 Brown	1
2		10YR5/4 Yellow brown					2
3							3
4							4
5							5
6							6
7							7
8		10YR5/6 Yellow Red (orange).					8
		4" Lense					
		10YR5/4 Yellow brown					
9							9
10							10
11							11
12							12
13							13
14							14
15		EOB at 15'					15

42

24"

27"

RESOURCE ENGINEERING ASSOCIATES, INC.

Soil Profile Log

LOCATION:	DATE: 5/21/13	Project: Golden Sands
TEST EXCAVATION #: 55	LOGGER: DW/RP	PROJECT #:
SURFACE ELEVATION: 1004.28	EQUIPMENT: Geoprobe	MAP UNIT:
DEPTH to SATURATION:	DEPTH to BEDROCK:	SURFACE CONDITION:
DESCRIPTION:		DRAWING #:

DEPTH (ft)	USCS Class	DESCRIPTION OF USCS PROPERTIES Depth, USCS Name, Structure, Plasticity, Strength, Moisture & Color	MUNSELL COLOR Matrix	Mottles	Sample Depth	COMMENTS & NOTES Saturation Type, Bedrock Type, Field Tests, & Other Comments/Notes	DEPTH (ft)
		9" Topsoil Dark Brown					
1	SP	Sand Medium to fine Moist				7.5 YR 6/6 reddish yellow	1
2	SP	Sand Medium to fine Moist				10YR 6/6 brownish yellow	2
3							3
4							4
5							5
6							6
7							7
8							8
9						roots	9
10						10YR 6/3 pale brown	10
11							11
12							12
13							13
14							14
15		EOB 15'					15

42"

38"

30"

22

RESOURCE ENGINEERING ASSOCIATES, INC.

Soil Profile Log

Project: Golden Sands		
LOCATION:	**DATE:** 5/21/13	**PROJECT #:**
TEST EXCAVATION #: 56	**LOGGER:** DW / RP	**MAP UNIT:**
SURFACE ELEVATION: 1004.16	**EQUIPMENT:** Geoprobe	**SURFACE CONDITION:**
DEPTH to SATURATION:	**DEPTH to BEDROCK:**	**DRAWING #:**
DESCRIPTION:		

DEPTH (ft)	USCS Class	DESCRIPTION OF USCS PROPERTIES Depth, USCS Name, Structure, Plasticity, Strength, Moisture & Color	MUNSELL COLOR Matrix	Mottles	Sample Depth	COMMENTS & NOTES Saturation Type, Bedrock Type, Field Tests, & Other Comments/Notes	DEPTH (ft)
		9" Topsoil Dark Brown					
1	SP	Sand medium to fine Moist				7.5YR 5/4 Brown	1
2						7.5 YR 6/4 Light Brown	2
3		Sand medium to fine moist					3
4							4
5							5
6							6
7							7
8							8
9							9
10							10
11							11
12							12
13		some gravel					13
14							14
15		End 15'					15

40"

36"

42"

RESOURCE ENGINEERING ASSOCIATES, INC.

Soil Profile Log

			Project: Golden Sands
LOCATION:	**DATE:** 5/21/13		**PROJECT #:**
TEST EXCAVATION #: 57	**LOGGER:** DW/RP		**MAP UNIT:**
SURFACE ELEVATION: 1004.02	**EQUIPMENT:** Geoprobe		**SURFACE CONDITION:**
DEPTH to SATURATION:	**DEPTH to BEDROCK:**		**DRAWING #:**

DESCRIPTION:

DEPTH (ft)	USCS Class	DESCRIPTION OF USCS PROPERTIES Depth, USCS Name, Structure, Plasticity, Strength, Moisture & Color	MUNSELL COLOR Matrix	MUNSELL COLOR Mottles	Sample Depth	COMMENTS & NOTES Saturation Type, Bedrock Type, Field Tests, & Other Comments/Notes	DEPTH (ft)
		4" Topsoil Dark Brown					
1	SP	Sand medium to fine Moist				7.5 YR 5/4 Brown	1
2	SP	Sand Medium to fine Moist				7.5 YR 6/4 Lt. Brown	2
3							3
4							4
5	SP	moist				7.5 YR 6/4 Lt Brown	5
6		Orange 5YR 5/4 yellowish red					6
7						7.5 YR 6/4 Lt Brown	7
8							8
9							9
10		moist					10
11							11
12							12
13							13
14		Some gravel					14
15		EOB 15'					15

4'4"

4'8"

4'3"

RESOURCE ENGINEERING ASSOCIATES, INC

Soil Profile Log

LOCATION:	DATE: 5/21/13	Project: Golden Sands
TEST EXCAVATION #: #58	LOGGER: RP	PROJECT #:
SURFACE ELEVATION: 1004.59	EQUIPMENT:	MAP UNIT:
DEPTH to SATURATION:	DEPTH to BEDROCK:	SURFACE CONDITION:
DESCRIPTION: 100' East #57		DRAWING #:

DEPTH (ft)	USCS Class	DESCRIPTION OF USCS PROPERTIES Depth, USCS Name, Structure, Plasticity, Strength, Moisture & Color	MUNSELL COLOR Matrix	MUNSELL COLOR Mottles	Sample Depth	COMMENTS & NOTES Saturation Type, Bedrock Type, Field Tests, & Other Comments/Notes	DEPTH (ft)
		Top soil, Sand, medium to fine grain moist, Dark Brown					
1	SP	Sand, medium to fine grained, moist 10YR3/4. Dark yellow brown					1
2							2
3		10 YR 5/4 dark yellow brown					3
4							4
5							5
6	6"	5YR 3/4 dark Reddish brown 10 YR4/3 BROWN				Includes Root organic material.	6
7							7
8							8
9							9
10							10
11							11
12							12
13							13
14							14
15		EOB 15'					15

44'

4'

25

RESOURCE ENGINEERING ASSOCIATES, INC.

Soil Profile Log

Project: Golden Sands		
LOCATION:	**DATE:** 5/21/13	**PROJECT #:**
TEST EXCAVATION #: #59	**LOGGER:** RP	**MAP UNIT:**
SURFACE ELEVATION: 1002.53	**EQUIPMENT:** Geoprobe	**SURFACE CONDITION:**
DEPTH to SATURATION:	**DEPTH to BEDROCK:**	**DRAWING #:**

DESCRIPTION: 200' E #58

DEPTH (ft)	USCS Class	DESCRIPTION OF USCS PROPERTIES Depth, USCS Name, Structure, Plasticity, Strength, Moisture & Color	MUNSELL COLOR Matrix	MUNSELL COLOR Mottles	Sample Depth	COMMENTS & NOTES Saturation Type, Bedrock Type, Field Tests, & Other Comments/Notes	DEPTH (ft)
9"	6	Topsoil. Sand, medium to fine grain moist Dark Brown					
	SP	Sand, medium to fine grained moist 10 YR 3/4 dark yellow brown					
1							1
2							2
45"							
3		5 YR 4/6 yellowish Red					3
4							4
		5 YR 5/6 Yellowish Red					
5		Coarse & medium grained w/ gravel sand. moist					5
		Sand, medium to fine grained 10 YR 5/4 Yellowish brown.					
6							6
7							7
41							
8							8
9							9
10							10
11							11
12							12
36"							
13							13
14							14
15		EOB @ 15'					15

RESOURCE ENGINEERING ASSOCIATES INC

Soil Profile Log

LOCATION:	DATE: 5/21/13	Project: Golden Sands.
TEST EXCAVATION #: # 60.	LOGGER: Rp.	PROJECT #:
SURFACE ELEVATION: 1002.40	EQUIPMENT: Geoprobe.	MAP UNIT:
DEPTH to SATURATION: 22'-7" 22.58'	DEPTH to BEDROCK:	SURFACE CONDITION:
DESCRIPTION: 200' E # 59.		DRAWING #:

DEPTH (ft)	USCS Class	DESCRIPTION OF USCS PROPERTIES Depth, USCS Name, Structure, Plasticity, Strength, Moisture & Color	MUNSELL COLOR Matrix	MUNSELL COLOR Mottles	Sample Depth	COMMENTS & NOTES Saturation Type, Bedrock Type, Field Tests, & Other Comments/Notes	DEPTH (ft)
43"	8	Top soil - Sand. medium grained trace silt, black, moist					
	2'	Sand - medium to fine grain - Trace silt moist - 10YR 3/4 Dark yellow brown					
	SP	10YR4/4 Dark yellowish brown					
22"		10YR5/6 Brownish Yellow.					
29"							
20"		10YR 3/3 Dark brown.					
48"		WET 10YR3/4 Dark yellow brown, dense 10 min Saturated at 22'-7"					

RESOURCE ENGINEERING ASSOCIATES, INC.

Soil Profile Log

Project: Golden Sands.		
LOCATION:	**DATE:** 5/21/13	**PROJECT #:**
TEST EXCAVATION #: # 60 Continued	**LOGGER:** RP.	**MAP UNIT:**
SURFACE ELEVATION:	**EQUIPMENT:** Geoprobe.	**SURFACE CONDITION:**
DEPTH to SATURATION: 22'-7"	**DEPTH to BEDROCK:**	**DRAWING #:**
DESCRIPTION: END 3'0		

DEPTH (ft)	USCS Class	DESCRIPTION OF USCS PROPERTIES Depth, USCS Name, Structure, Plasticity, Strength, Moisture & Color	MUNSELL COLOR Matrix	MUNSELL COLOR Mottles	Sample Depth	COMMENTS & NOTES Saturation Type, Bedrock Type, Field Tests, & Other Comments/Notes	DEPTH (ft)
	SP	Sand, fine grained, dense. Saturated 10YR 4/3 Brown.					
1							1
2							2
3							3
4		EOB at 30'					4
5						3' Sluff 2' water 5 at 5 min	5
6						at 15 min 4' sluff. 3'-5" 7'-5"	6
7							7
8							8
9							9
10							10
11							11
12							12
13							13
14							14
15							15

60"

RESOURCE ENGINEERING ASSOCIATES INC.

Soil Profile Log

Project: Golden Sands.		
LOCATION:	**DATE:** 5/21/13	**PROJECT #:**
TEST EXCAVATION #: #61	**LOGGER:** RO.	**MAP UNIT:**
SURFACE ELEVATION: 1003.13	**EQUIPMENT:** Geoprobe.	**SURFACE CONDITION:**
DEPTH to SATURATION: 22'-6" 22.5'	**DEPTH to BEDROCK:**	**DRAWING #:**
DESCRIPTION: South East #60		

DEPTH (ft)	USCS Class	DESCRIPTION OF USCS PROPERTIES Depth, USCS Name, Structure, Plasticity, Strength, Moisture & Color	MUNSELL COLOR Matrix	MUNSELL COLOR Mottles	Sample Depth	COMMENTS & NOTES Saturation Type, Bedrock Type, Field Tests, & Other Comments/Notes	DEPTH (ft)
0		Top Soil, moist Sand, medium to fine w/ Trace Silt Black					0
1	SP	Sand medium to fine, moist. 10YR 3/4 Dark Yellow brown					1
2							2
3		10YR 5/4 Yellow brown					3
4							4
5							5
6		10YR 6/3 Brownish yellow.					6
7							7
8							8
9							9
10		10YR 6/3 brownish yellow					10
11							11
12							12
13							13
14							14
15							15
16							16
17							17
18							18
19							19
20		10YR 4/4 Dark yellowish brown					20
21							21
22		Water Saturation after 15 min. 22'-6"			X		22
23							23
24	ML	Silt Saturated - 10YR 4/3 brown. Trace clay. Low plasticity.				Appears to be a restrictive Layer.	24
25							25

28

RESOURCE ENGINEERING ASSOCIATES, INC.

Soil Profile Log

LOCATION:	DATE:	Project:
TEST EXCAVATION #: #101 Continued-	LOGGER:	PROJECT #:
SURFACE ELEVATION:	EQUIPMENT:	MAP UNIT:
DEPTH to SATURATION: 22'-6"	DEPTH to BEDROCK:	SURFACE CONDITION:
DESCRIPTION:		DRAWING #:

DEPTH (ft)	USCS Class	DESCRIPTION OF USCS PROPERTIES Depth, USCS Name, Structure, Plasticity, Strength, Moisture & Color	MUNSELL COLOR Matrix	Mottles	Sample Depth	COMMENTS & NOTES Saturation Type, Bedrock Type, Field Tests, & Other Comments/Notes	DEPTH (ft)
25	ML	Silt 10YR4/3 brown massive- Low plasticity. wet.					
26							1
27						sampled	2
28	SP	Sand fine grained Trace silt wet 10YR4/3 brown.					3
29							4
30		EOB at 30'					5
6							6
7						4'-2" slurff. 2'-4" H_2O 6'-6" water	7
8							8
9							9
10							10
11							11
12							12
13							13
14							14
15						28b	15

RESOURCE ENGINEERING ASSOCIATES, INC

Soil Profile Log

Project: Golden Sands		
LOCATION:	**DATE:** 5/21/13	**PROJECT #:**
TEST EXCAVATION #: 62	**LOGGER:** RO.	**MAP UNIT:**
SURFACE ELEVATION: 1003.65	**EQUIPMENT:** GeoProbe	**SURFACE CONDITION:**
DEPTH to SATURATION:	**DEPTH to BEDROCK:**	**DRAWING #:**
DESCRIPTION: N-E #61		

DEPTH (ft)	USCS Class	DESCRIPTION OF USCS PROPERTIES Depth, USCS Name, Structure, Plasticity, Strength, Moisture & Color	MUNSELL COLOR Matrix	Mottles	Sample Depth	COMMENTS & NOTES Saturation Type, Bedrock Type, Field Tests, & Other Comments/Notes	DEPTH (ft)
	9"	Topsoil. Sand, medium to fine. Trace silt. moist - Dark Brown.					
1	SP	Sand medium to fine, trace silt, moist 7.5YR4/4 Brown					1
2	6"	10YR4/6 Dark yellow brown.					2
3							3
4	6"	5YR5/6 yellowish Red.					4
5							5
6							6
7	6"	7.5YR5/3 Brown					7
8							8
9							9
10							10
11							11
12							12
13							13
14							14
15		EOB-15'					15

45"

37"

48"

29

RESOURCE ENGINEERING ASSOCIATES, INC.

Soil Profile Log

Project: Golden Sands		
LOCATION:	**DATE:** 5/21/13	**PROJECT #:**
TEST EXCAVATION #: # 63	**LOGGER:** RO.	**MAP UNIT:**
SURFACE ELEVATION: 1004.31	**EQUIPMENT:** Geoprobe.	**SURFACE CONDITION:**
DEPTH to SATURATION:	**DEPTH to BEDROCK:**	**DRAWING #:**
DESCRIPTION: E. #62 - 200'		

DEPTH (ft)	USCS Class	DESCRIPTION OF USCS PROPERTIES Depth, USCS Name, Structure, Plasticity, Strength, Moisture & Color	MUNSELL COLOR Matrix	MUNSELL COLOR Mottles	Sample Depth	COMMENTS & NOTES Saturation Type, Bedrock Type, Field Tests, & Other Comments/Notes	DEPTH (ft)
	9"	Topsoil, Sand, medium to fine, Trace Silt, moist. dark Brown					
1	SP	Sand, medium to fine grained, moist 10YR3/4 dark Brown					1
46"	6"	10YR4/4 Brown					
2							2
3							3
4							4
5		10YR4/6 Strong brown 10YR5/4 brown. few gravel.					5
6							6
7							7
48"							
8							8
9							9
10		Sand, medium to fine grained moist, 10YR4/4 brown					10
11							11
12		6" Sand coarse to medium, moist Some gravel 10YR5/3 Brown					12
44"							
13							13
14		EOB 15'					14
15							15

(30)

RESOURCE ENGINEERING ASSOCIATES, INC.

Soil Profile Log

LOCATION:	DATE: 5/21/13	Project: Golden Sands
TEST EXCAVATION #: #64	LOGGER: RP	PROJECT #:
SURFACE ELEVATION: 997.51	EQUIPMENT: Geoprobe.	MAP UNIT:
DEPTH to SATURATION:	DEPTH to BEDROCK:	SURFACE CONDITION:
DESCRIPTION:		DRAWING #:

DEPTH (ft)	USCS Class	DESCRIPTION OF USCS PROPERTIES Depth, USCS Name, Structure, Plasticity, Strength, Moisture & Color	MUNSELL COLOR Matrix	MUNSELL COLOR Mottles	Sample Depth	COMMENTS & NOTES Saturation Type, Bedrock Type, Field Tests, & Other Comments/Notes	DEPTH (ft)
	S	Topsoil, Sand medium to fine grained, Trace Silt moist Dark Brown					
1	SP	Sand, medium to fine grained Poorly Graded. moist 10 YR 3/2 Dark Brown					1
2							2
3							3
4		4½ 10YR5/3 Brown.					4
5							5
6							6
7							7
8							8
9							9
10							10
11							11
12							12
13							13
14		EOB-15'					14
15							15

34"

36"

49"

RESOURCE ENGINEERING ASSOCIATES INC.

Soil Profile Log

LOCATION:	DATE: 5/22/13	Project: Golden Sands
TEST EXCAVATION #: 65	LOGGER: DW/RP	PROJECT #:
SURFACE ELEVATION: 1002.40	EQUIPMENT: Geoprobe	MAP UNIT:
DEPTH to SATURATION:	DEPTH to BEDROCK:	SURFACE CONDITION:
DESCRIPTION:		DRAWING #:

DEPTH (ft)	USCS Class	DESCRIPTION OF USCS PROPERTIES Depth, USCS Name, Structure, Plasticity, Strength, Moisture & Color	MUNSELL COLOR Matrix	Mottles	Sample Depth	COMMENTS & NOTES Saturation Type, Bedrock Type, Field Tests, & Other Comments/Notes	DEPTH (ft)
		9" Topsoil Dark Brown Sand					
1	SP	Sand Medium to fine moist				7.5YR 4/4 Brown	1
2							2
3	SP	Sand medium to fine moist				10YR 5/4 Yellowish Brown	3
4							4
5							5
6							6
7							7
8						7.5YR 6/4 Lt Brown	8
9							9
10							10
11							11
12							12
13							13
14							14
15							15
16							16
17							17
18		Saturated?				Saturated?	18
19							19
20							20
21							21
22						saturated after 10min	22
23	ML	Silty low plasticity massive structure wet to moist				7.5YR 5/1 Gray	23
24		(continue)				appears to be restricted layer	24
25							25

46"

28"

24"

60"

32A

RESOURCE ENGINEERING ASSOCIATES, INC

Soil Profile Log

Project: Golden Sand		
LOCATION:	**DATE:** 5/22/13	**PROJECT #:**
TEST EXCAVATION #: 105 cont.	**LOGGER:** DW/RP.	**MAP UNIT:**
SURFACE ELEVATION:	**EQUIPMENT:** Geoprobe.	**SURFACE CONDITION:**
DEPTH to SATURATION:	**DEPTH to BEDROCK:**	**DRAWING #:**

DESCRIPTION:

DEPTH (ft)	USCS Class	DESCRIPTION OF USCS PROPERTIES Depth, USCS Name, Structure, Plasticity, Strength, Moisture & Color	MUNSELL COLOR Matrix	MUNSELL COLOR Mottles	Sample Depth	COMMENTS & NOTES Saturation Type, Bedrock Type, Field Tests, & Other Comments/Notes	DEPTH (ft)
	ML	Silt low plasticity massive structure wet				7.5YR 5/1 Gray	
	SP	Sand medium to fine ~~sat~~ saturated				7.5YR 5/3 Brown	1
2							2
3							3
4							4
5		EOB 30'					5
6							6
7							7
8							8
9							9
10							10
11							11
12							12
13							13
14							14
15							15

46"

32

RESOURCE ENGINEERING ASSOCIATES, INC.

Soil Profile Log

			Project: Golden Sands
LOCATION:		**DATE:** 5/22/13	**PROJECT #:**
TEST EXCAVATION #: 66		**LOGGER:** DW	**MAP UNIT:**
SURFACE ELEVATION: 1005.07		**EQUIPMENT:** Geoprobe	**SURFACE CONDITION:**
DEPTH to SATURATION:		**DEPTH to BEDROCK:**	**DRAWING #:**

DESCRIPTION:

DEPTH (ft)	USCS Class	DESCRIPTION OF USCS PROPERTIES Depth, USCS Name, Structure, Plasticity, Strength, Moisture & Color	MUNSELL COLOR Matrix	MUNSELL COLOR Mottles	Sample Depth	COMMENTS & NOTES Saturation Type, Bedrock Type, Field Tests, & Other Comments/Notes	DEPTH (ft)
		6" Topsoil Dark brown					
1	SP	Sand Medium To Fine Moist				7.5YR 5/4 Brown	1
2	SP	Sand Medium To Fine Moist				10 YR 6/4 lt. yellowish brown	2
3							3
4							4
5							5
6		Some gravel					6
7							7
8							8
9							9
10							10
11							11
12							12
13							13
14		Some gravel					14
15		EOB 15'					15

46"

40"

44"

33

RESOURCE ENGINEERING ASSOCIATES, INC.

Soil Profile Log

Project: Golden Sands		
LOCATION:	**DATE:** 5/22/13	**PROJECT #:**
TEST EXCAVATION #: 67	**LOGGER:** DW	**MAP UNIT:**
SURFACE ELEVATION: 1007.05	**EQUIPMENT:** Geoprobe	**SURFACE CONDITION:**
DEPTH to SATURATION:	**DEPTH to BEDROCK:**	**DRAWING #:**

DESCRIPTION:

DEPTH (ft)	USCS Class	DESCRIPTION OF USCS PROPERTIES Depth, USCS Name, Structure, Plasticity, Strength, Moisture & Color	MUNSELL COLOR Matrix	Mottles	Sample Depth	COMMENTS & NOTES Saturation Type, Bedrock Type, Field Tests, & Other Comments/Notes	DEPTH (ft)
		7" Topsoil Dark Brow					
1	SP	Sand Medium to Fine Moist				7.5YR 4/4 Brown	1
2	SP	Sand Medium to Fine Moist				10YR 6/4 Lt. yellowish brown	2
3							3
4							4
5							5
6							6
7							7
8							8
9							9
10							10
11		some gravel					11
12							12
13							13
14							14
15		EOB 15'					15

40"

35"

30"

34

RESOURCE ENGINEERING ASSOCIATES, INC.

Soil Profile Log

LOCATION:		DATE: 5/22/13	Project:
TEST EXCAVATION #: 68		LOGGER: DW	PROJECT #:
SURFACE ELEVATION: 1006.79		EQUIPMENT: Geoprobe	MAP UNIT:
DEPTH to SATURATION:		DEPTH to BEDROCK:	SURFACE CONDITION:
DRAWING #:			

DESCRIPTION:

DEPTH (ft)	USCS Class	DESCRIPTION OF USCS PROPERTIES Depth, USCS Name, Structure, Plasticity, Strength, Moisture & Color	MUNSELL COLOR Matrix	MUNSELL COLOR Mottles	Sample Depth	COMMENTS & NOTES Saturation Type, Bedrock Type, Field Tests, & Other Comments/Notes	DEPTH (ft)
		8" Topsoil Dark Brown					
1	SP	Sand Medium to Fine Moist				7.5 YR 5/4 Brown	1
2							2
3	SP	Sand Medium to Fine Moist				10 YR 6/4 Lt. Yellowish Brown	3
4							4
5							5
6							6
7		some gravel					7
8							8
9							9
10							10
11							11
12							12
13							13
14							14
15		EOB 15'					15

45"

40"

78"

35

RESOURCE ENGINEERING ASSOCIATES, INC

Soil Profile Log

		Project: Golden Sands
LOCATION:	**DATE:** 5/22/13	**PROJECT #:**
TEST EXCAVATION #: 69	**LOGGER:** DW	**MAP UNIT:**
SURFACE ELEVATION: 1005.92	**EQUIPMENT:** Geoprobe	**SURFACE CONDITION:**
DEPTH to SATURATION:	**DEPTH to BEDROCK:**	**DRAWING #:**

DESCRIPTION:

DEPTH (ft)	USCS Class	DESCRIPTION OF USCS PROPERTIES Depth, USCS Name, Structure, Plasticity, Strength, Moisture & Color	MUNSELL COLOR Matrix	MUNSELL COLOR Mottles	Sample Depth	COMMENTS & NOTES Saturation Type, Bedrock Type, Field Tests, & Other Comments/Notes	DEPTH (ft)
		6" Topsoil Dark Brown					
1	SP	Sand medium to fine moist				7.5YR 5/4	1
2	SP	Sand medium to fine moist				10YR 6/4	2
3							3
4							4
5							5
6							6
7		Some gravel					7
8							8
9							9
10							10
11							11
12							12
13		Some gravel					13
14							14
15		EOB 15'					15

4'

6'

8'

13'

39

RESOURCE ENGINEERING ASSOCIATES, INC.

Soil Profile Log

LOCATION:	DATE: 5/27/13	Project: Golden Sands
TEST EXCAVATION #: 70	LOGGER: DW	PROJECT #:
SURFACE ELEVATION: 1003.25	EQUIPMENT: Geoprobe	MAP UNIT:
DEPTH to SATURATION:	DEPTH to BEDROCK:	SURFACE CONDITION:
DESCRIPTION:		DRAWING #:

DEPTH (ft)	USCS Class	DESCRIPTION OF USCS PROPERTIES Depth, USCS Name, Structure, Plasticity, Strength, Moisture & Color	MUNSELL COLOR Matrix	MUNSELL COLOR Mottles	Sample Depth	COMMENTS & NOTES Saturation Type, Bedrock Type, Field Tests, & Other Comments/Notes	DEPTH (ft)
		10" Topsoil					
1	SP	Sand Medium to fine moist				7.5YR 4/4 Brown	1
2							2
3							3
	SP	Sand medium to fine moist				10YR 5/4 Yellowish brown	
4							4
5						10YR 6/4 Lt Yellowish Brown	5
6							6
7							7
8							8
9							9
10							10
11							11
12							12
13							13
14							14
15		Prob 15'					15

4'

3'4"

4'

37

RESOURCE ENGINEERING ASSOCIATES, INC.

Soil Profile Log

LOCATION:	DATE: 5/22/13	Project: Golden Sands
TEST EXCAVATION #: 71	LOGGER: DW	PROJECT #:
SURFACE ELEVATION: 1005.59	EQUIPMENT: Geoprobe	MAP UNIT:
DEPTH to SATURATION:	DEPTH to BEDROCK:	SURFACE CONDITION:
DESCRIPTION:		DRAWING #:

DEPTH (ft)	USCS Class	DESCRIPTION OF USCS PROPERTIES Depth, USCS Name, Structure, Plasticity, Strength, Moisture & Color	MUNSELL COLOR Matrix	MUNSELL COLOR Mottles	Sample Depth	COMMENTS & NOTES Saturation Type, Bedrock Type, Field Tests, & Other Comments/Notes	DEPTH (ft)
		6" Topsoil Dark Brown					
1	SP	Sand Medium to fine Moist				7.5YR 5/4 Brown	1
2	SP	Sand Medium to fine Moist				10YR 6/4 Lt. Yellowish Brown	2
3							3
4							4
5							5
6							6
7							7
8							8
9							9
10							10
11		gray streaks					11
12							12
13		some gravel					13
14							14
15		EOB 15'					15

54"

40"

42"

RESOURCE ENGINEERING ASSOCIATES, INC.

Soil Profile Log

Project: Golden Sands		
LOCATION:	**DATE:** 5/22/13	**PROJECT #:**
TEST EXCAVATION #: 72	**LOGGER:** DW	**MAP UNIT:**
SURFACE ELEVATION: 1006.79	**EQUIPMENT:** Geoprobe	**SURFACE CONDITION:**
DEPTH to SATURATION:	**DEPTH to BEDROCK:**	**DRAWING #:**

DESCRIPTION:

DEPTH (ft)	USCS Class	DESCRIPTION OF USCS PROPERTIES Depth, USCS Name, Structure, Plasticity, Strength, Moisture & Color	MUNSELL COLOR Matrix	Mottles	Sample Depth	COMMENTS & NOTES Saturation Type, Bedrock Type, Field Tests, & Other Comments/Notes	DEPTH (ft)
		10" Topsoil					
1	SP	Sand Medium to Fine Moist				7.5YR 5/4 Brown	1
2	SP	Sand Medium to Fine Moist				10YR 6/4 Lt. Yellowish Brown	2
3							3
4							4
5							5
6							6
7							7
8							8
9							9
10							10
11							11
12							12
13							13
14							14
15		EOB 15'					15

48"

36"

40"

EAST PART SARATOGA T.21N.-R.6E.

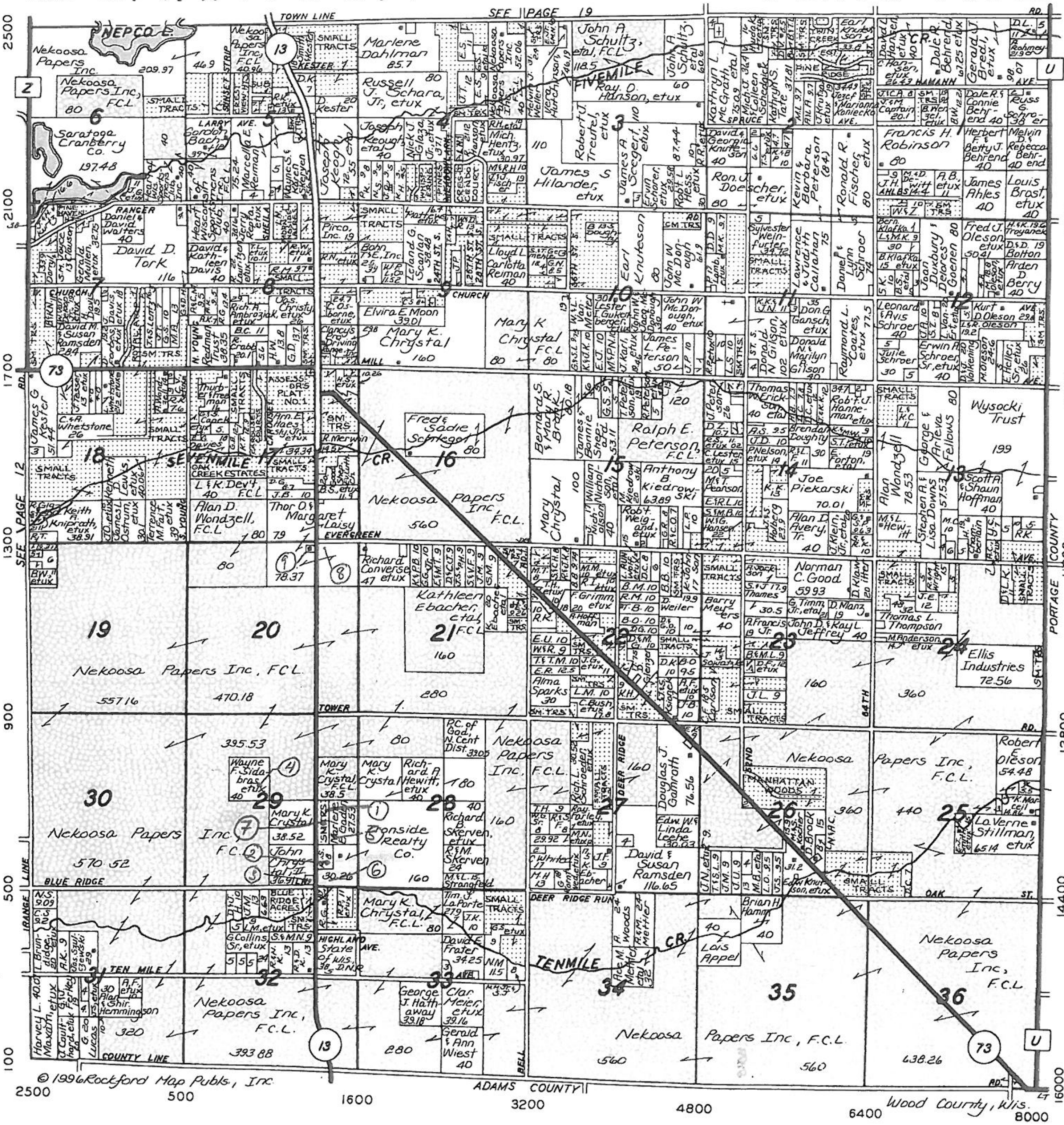

Ritchay Funeral Home
1950 - 12th Street South
Wisconsin Rapids, Wisconsin 54494
(715) 423-1414

John A. Ritchay - John A. Ritchay, Jr. - Michael J. Ritchay

Feldner / Ritchay Funeral Home
403 Prospect Avenue
Nekoosa, Wisconsin 54457
(715) 886-3166

COLDWELL BANKER
Expect the best.®
SIEWERT REALTORS
Call 424-4800
325 - 8th Street South
Wisconsin Rapids
http://www.coldwellbanker.com
SERVING ALL YOUR REAL ESTATE NEEDS

(1)

WISCONSIN UNIQUE WELL NUMBER **AC539**

Source: WELL CONSTRUCTION

State of Wi-Private Water Systems-DG/2
Department Of Natural Resources, Box 7921
Madison, WI 53707

Form 3300-77A
(Rev 02/02)bw

Depth 50.5 FT

Property Owner: RON THURBER
Telephone Number: - -

Mailing Address: 13811 HWY 13~~8~~ S

City: WISCONSIN RAPIDS | State: WI | Zip Code: 54494

County of Well Location: 72 WOOD | Co Well Permit No: W | Well Completion Date: May 27, 1988

Well Constructor: RICHARD J ROTH | License #: 2617 | Facility ID (Public):

Address: W2867 HWY 73 SOUTH | Public Well Plan Approval#:

City: NEKOOSA | State: WI | Zip Code: 54457 | Date Of Approval:

Hicap Permanent Well # | Common Well # | Specific Capacity: gpm/ft

1. Well Location

T=Town C=City V=Village
T of SARATOGA

Fire#: 13811

Street Address or Road Name and Number: HWY 13 S

Subdivision Name | Lot# | Block #

Gov't Lot or ~~SW~~ NE 1/4 of ~~NW~~ SE 1/4 of Section 29 T 21 N;R 6 E

Latitude Deg. Min.
Longitude Deg Min.

Lat/Long Method

2. Well Type 1 (See item 12 below)
1=New 2=Replacement 3=Reconstruction
of previous unique well # _____ constructed in 88

Reason for replaced or reconstructed Well?
NEW HOME

2 1=Drilled 2=Driven Point 3=Jetted 4=Other

3. Well Serves P # of homes and or (eg: barn, restaurant, church, school, industry, etc.)
M=Munic O=OTM N=NonCom P=Private Z=Other X=NonPot A=Anode L=Loop H=Drillhole

High Capacity:
Well? N
Property? N

4. Is the well located upslope or sideslope and not downslope from any contamination sources, including those on neighboring properties? Y
Well located in floodplain? N
Distance in feet from well to nearest: (including proposed)

1. Landfill
26 2. Building Overhang
47 3. 1=Septic 2= Holding Tank
57 4. Sewage Absorption Unit
5. Nonconforming Pit
6. Buried Home Heating Oil Tank
7. Buried Petroleum Tank
8. 1=Shoreline 2= Swimming Pool
9. Downspout/ Yard Hydrant
10. Privy
11. Foundation Drain to Clearwater
12. Foundation Drain to Sewer
33 13. Building Drain 2
1=Cast Iron or Plastic 2=Other
14. Building Sewer 1=Gravity 2=Pressure
1=Cast Iron or Plastic 2=Other
15. Collector Sewer: ___ units ___ in . diam.
16. Clearwater Sump
17. Wastewater Sump
18. Paved Animal Barn Pen
19. Animal Yard or Shelter
20. Silo
21. Barn Gutter
22. Manure Pipe 1=Gravity 2=Pressure
1=Cast iron or Plastic 2=Other
23. Other manure Storage
24. Ditch
25. Other NR 812 Waste Source

5. Drillhole Dimensions and Construction Method

Dia.(in.)	From (ft)	To (ft)
	surface	

Upper Enlarged Drillhole
-- 1. Rotary - Mud Circulation
-- 2. Rotary - Air
-- 3. Rotary - Air and Foam
-- 4. Drill-Through Casing Hammer
-- 5. Reverse Rotary
-- 6. Cable-tool Bit _ n. dia
-- 7. Temp. Outer Casing _ in. dia. _____ depth ft.
Removed ?
Other

Lower Open Bedrock

Geology Codes	8. Geology Type, Caving/Noncaving, Color, Hardness, etc	From (ft.)	To (ft.)

6. Casing Liner Screen

Dia. (in.)	Material, Weight, Specification Manufacturer & Method of Assembly	From (ft.)	To (ft.)
2.0	GALV. WELL PIPE	surface	47

Dia.(in.)	Screen type, material & slot size	From	To
	POINT	47	51

9. Static Water Level
31.5 feet B ground surface
A=Above B=Below

10. Pump Test
Pumping level ft. below surface
Pumping at GP Hrs

11. Well Is: 14 in. A Grade
A=Above B=Below
Developed?
Disinfected? Y
Capped?

7. Grout or Other Sealing Material

Method	Kind of Sealing Material	From (ft.)	To (ft.)	# Sacks Cement
		surface		

12. Did you notify the owner of the need to permanently abandon and fill all unused wells on this property?
If no, explain

13. Initials of Well Constructor or Supervisory Driller: KMR | Date Signed: 6/8/88

Initials of Drill Rig Operator (Mandatory unless same as above) | Date Signed

Additonal Comments?
Owner Sent Label? Y
Variance Issued?
More Geology?

Batch

(2)

WISCONSIN UNIQUE WELL NUMBER
Source: WELL CONSTRUCTION **EM435**

State of Wi-Private Water Systems-DG/2
Department Of Natural Resources, Box 7921
Madison, WI 53707

Form 3300-77A
(Rev 02/02)bw

Depth 44 FT

Property Owner: BERNIE KLOSKOWSKI	Telephone Number: 715-323-6006
Mailing Address: 13911 HWY 13 S	
City: WISCONSIN RAPIDS	State: WI / Zip Code: 54494
County of Well Location: 72 WOOD	Co Well Permit No: W / Well Completion Date: August 28, 1991
Well Constructor: BERTRAM JUNEMANN WD INC	License #: 84 / Facility ID (Public):
Address: 7285 CTY TRK S	Public Well Plan Approval#:
City: RUDOLPH	State: WI / Zip Code: 54475 / Date Of Approval:
Hicap Permanent Well #	Common Well # / Specific Capacity: gpm/ft

1. Well Location
T=Town C=City V=Village: T of SARATOGA
Fire#:
Street Address or Road Name and Number: 13911 HWY 13 S
Subdivision Name / Lot# / Block #:
Gov't Lot or NE 1/4 of SE 1/4 of Section 29 T 21 N;R 6 E
Latitude Deg. Min.
Longitude Deg Min.

2. Well Type 2 (See item 12 below) Lat/Long Method
1=New 2=Replacement 3=Reconstruction
of previous unique well # _____ constructed in 0
Reason for replaced or reconstructed Well?
POINT PLUGGED

3. Well Serves P # of homes and or (eg: barn, restaurant, church, school, industry, etc.)
High Capacity: Well? N Property? N
M=Munic O=OTM N=NonCom P=Private Z=Other X=NonPot A=Anode L=Loop H=Drillhole

1 1=Drilled 2=Driven Point 3=Jetted 4=Other

4. Is the well located upslope or sideslope and not downslope from any contamination sources, including those on neighboring properties? Y
Well located in floodplain? N
Distance in feet from well to nearest: (including proposed)

1. Landfill
15 2. Building Overhang
60 3. 1=Septic 2= Holding Tank
75 4. Sewage Absorption Unit
5. Nonconforming Pit
6. Buried Home Heating Oil Tank
7. Buried Petroleum Tank
8. 1=Shoreline 2= Swimming Pool
9. Downspout/ Yard Hydrant
10. Privy
11. Foundation Drain to Clearwater
12. Foundation Drain to Sewer
13. Building Drain 1=Cast Iron or Plastic 2=Other
14. Building Sewer 1=Gravity 2=Pressure 1=Cast Iron or Plastic 2=Other
15. Collector Sewer: ___ units ___ in . diam.
16. Clearwater Sump
17. Wastewater Sump
18. Paved Animal Barn Pen
19. Animal Yard or Shelter
20. Silo
21. Barn Gutter
22. Manure Pipe 1=Gravity 2=Pressure 1=Cast iron or Plastic 2=Other
23. Other manure Storage
24. Ditch
25 25. Other NR 812 Waste Source
SMALL GARDEN COMPOSI

5. Drillhole Dimensions and Construction Method

Dia.(in.)	From (ft)	To (ft)
6.0	surface	44

Upper Enlarged Drillhole
-- 1. Rotary - Mud Circulation
-- 2. Rotary - Air
-- 3. Rotary - Air and Foam
-- 4. Drill-Through Casing Hammer
-- 5. Reverse Rotary
-- 6. Cable-tool Bit _ n. dia
-- 7. Temp. Outer Casing _ in. dia. _____ depth ft. Removed ?
Other

Lower Open Bedrock

Geology Codes	8. Geology Type, Caving/Noncaving, Color, Hardness, etc	From (ft.)	To (ft.)
_Y_	SAND AND GRAVEL	0	44

6. Casing Liner Screen

Dia. (in.)	Material, Weight, Specification Manufacturer & Method of Assembly	From (ft.)	To (ft.)
6.0	P.E. A-53 18.97 FOREIGN CONDUVEN	surface	41

Dia.(in.)	Screen type, material & slot size	From	To
5.6	OD JOHNSON SS	41	44

9. Static Water Level
28.0 feet B ground surface
A=Above B=Below

10. Pump Test
Pumping level 30.0 ft. below surface
Pumping at 10.0 GP 1.0 Hrs

11. Well Is: 12 in. A Grade
A=Above B=Below
Developed? Y
Disinfected? Y
Capped? Y

7. Grout or Other Sealing Material

Method / Kind of Sealing Material	From (ft.)	To (ft.)	# Sacks Cement
	surface		

12. Did you notify the owner of the need to permanently abandon and fill all unused wells on this property? N
If no, explain OWNER

13. Initials of Well Constructor or Supervisory Driller JJ Date Signed 10/12/91

Initials of Drill Rig Operator (Mandatory unless same as above) Date Signed

Additonal Comments?
Owner Sent Label? Y
Variance Issued?
More Geology?

Batch 146

WISCONSIN UNIQUE WELL NUMBER
Source: WELL CONSTRUCTION **IH329**

State of Wi-Private Water Systems-DG/2
Department Of Natural Resources, Box 7921
Madison, WI 53707

Form 3300-77A (Rev 02/02)bw (3)

Depth 42 FT

Property Owner: GREENEWAY, KARL	Telephone Number: - -
Mailing Address: 1131 BLUE RIDGE	
City: NEKOOSA	State: WI / Zip Code: 54457
County of Well Location: 72 WOOD	Co Well Permit No: W / Well Completion Date: April 3, 1995
Well Constructor: BERTRAM JUNEMANN WELL DRILLING I	License #: 84 / Facility ID (Public)
Address: 7285 CTY TRK S	Public Well Plan Approval#
City: RUDOLPH	State: WI / Zip Code: 54475 / Date Of Approval
Hicap Permanent Well # / Common Well #	Specific Capacity: gpm/ft

1. Well Location
T=Town C=City V=Village: T of SARATOGA
Fire#
Street Address or Road Name and Number: 1131 BLUE RIDGE LN
Subdivision Name / Lot# / Block #
Gov't Lot or SW 1/4 of SE 1/4 of Section 29 T 21 N;R 6 E
Latitude Deg. Min.
Longitude Deg Min.

2. Well Type 1 (See item 12 below) Lat/Long Method
1=New 2=Replacement 3=Reconstruction
of previous unique well # _____ constructed in 0
Reason for replaced or reconstructed Well?
NEW CONST
1 1=Drilled 2=Driven Point 3=Jetted 4=Other

3. Well Serves # of homes and or
P (eg: barn, restaurant, church, school, industry, etc.)
M=Munic O=OTM N=NonCom P=Private Z=Other X=NonPot A=Anode L=Loop H=Drillhole
High Capacity: Well? N Property? N

4. Is the well located upslope or sideslope and not downslope from any contamination sources, including those on neighboring properties? Y
Well located in floodplain? N
Distance in feet from well to nearest: (including proposed)

1. Landfill
6 2. Building Overhang
3. 1=Septic 2= Holding Tank
4. Sewage Absorption Unit
5. Nonconforming Pit
6. Buried Home Heating Oil Tank
7. Buried Petroleum Tank
8. 1=Shoreline 2= Swimming Pool
9. Downspout/ Yard Hydrant
10. Privy
11. Foundation Drain to Clearwater
12. Foundation Drain to Sewer
13. Building Drain 1=Cast Iron or Plastic 2=Other
14. Building Sewer 1=Gravity 2=Pressure 1=Cast Iron or Plastic 2=Other
15. Collector Sewer: ___ units ___ in . diam.
16. Clearwater Sump
17. Wastewater Sump
18. Paved Animal Barn Pen
19. Animal Yard or Shelter
20. Silo
21. Barn Gutter
22. Manure Pipe 1=Gravity 2=Pressure 1=Cast iron or Plastic 2=Other
23. Other manure Storage
24. Ditch
25. Other NR 812 Waste Source

5. Drillhole Dimensions and Construction Method

Dia.(in.)	From (ft)	To (ft)
6.0	surface	42

Upper Enlarged Drillhole
-- 1. Rotary - Mud Circulation
-- 2. Rotary - Air
-- 3. Rotary - Air and Foam
-- 4. Drill-Through Casing Hammer
-- 5. Reverse Rotary
-- 6. Cable-tool Bit _ n. dia
-- 7. Temp. Outer Casing _ in. dia. _____ depth ft. Removed ?
Other
Lower Open Bedrock

6. Casing Liner Screen

Dia. (in.)	Material, Weight, Specification Manufacturer & Method of Assembly	From (ft.)	To (ft.)
6.0	PE A53 280 SAWHILL	surface	39

Dia.(in.)	Screen type, material & slot size	From	To
5.6	JOHNSON SS	39	42

7. Grout or Other Sealing Material

Method / Kind of Sealing Material	From (ft.)	To (ft.)	# Sacks Cement
NONE REQUIRED	surface	0.0	

8. Geology

Geology Codes	Type, Caving/Noncaving, Color, Hardness, etc	From (ft.)	To (ft.)
_Y_	SAND @ GRAVEL	0	42

9. Static Water Level
20.0 feet B ground surface
A=Above B=Below

10. Pump Test
Pumping level 23.0 ft. below surface
Pumping at 20.0 GP M 1.0 Hrs

11. Well Is: 12 in. A Grade
A=Above B=Below
Developed? Y
Disinfected? Y
Capped? Y

12. Did you notify the owner of the need to permanently abandon and fill all unused wells on this property?
If no, explain NONE

13. Initials of Well Constructor or Supervisory Driller JJ Date Signed 4/18/95
Initials of Drill Rig Operator (Mandatory unless same as above) Date Signed

Additonal Comments? Variance Issued?
Owner Sent Label? Y More Geology?

Batch 333

WISCONSIN UNIQUE WELL NUMBER
Source: WELL CONSTRUCTION **KP652**

State of Wi-Private Water Systems-DG/2
Department Of Natural Resources, Box 7921
Madison, WI 53707

Form 3300-77A
(Rev 02/02)bw (4)

Depth 39 FT

Property Owner: SIDABRAS, WAYNE (KULKA)?	Telephone Number: - -
Mailing Address: 13550 HWY 13 S	
City: WISCONSIN RAPIDS	State: WI / Zip Code: 54494
County of Well Location: 72 WOOD	Co Well Permit No: W / Well Completion Date: August 17, 1995
Well Constructor: BERTRAM JUNEMANN WELL DRILLING I	License #: 84 / Facility ID (Public):
Address: 7285 CTY TRK S	Public Well Plan Approval#:
City: RUDOLPH	State: WI / Zip Code: 54475 / Date Of Approval:
Hicap Permanent Well # / Common Well #	Specific Capacity: gpm/ft

1. Well Location
T=Town C=City V=Village
T of SARATOGA
Fire#
Street Address or Road Name and Number: 13550 HWY 13 S
Subdivision Name / Lot# / Block #
Gov't Lot or SE 1/4 of NW 1/4 of Section 29 T 21 N;R 6 E
Latitude Deg. Min.
Longitude Deg Min.
Lat/Long Method

2. Well Type 1 (See item 12 below)
1=New 2=Replacement 3=Reconstruction
of previous unique well # _____ constructed in 0
Reason for replaced or reconstructed Well?
MORE WATER
1 1=Drilled 2=Driven Point 3=Jetted 4=Other

3. Well Serves P # of homes and or (eg: barn, restaurant, church, school, industry, etc.)
M=Munic O=OTM N=NonCom P=Private Z=Other X=NonPot A=Anode L=Loop H=Drillhole
High Capacity: Well? N Property? N

4. Is the well located upslope or sideslope and not downslope from any contamination sources, including those on neighboring properties? Y
Well located in floodplain? N
Distance in feet from well to nearest: (including proposed)

1. Landfill
4 2. Building Overhang
40 3. 1=Septic 2= Holding Tank
60 4. Sewage Absorption Unit
5. Nonconforming Pit
6. Buried Home Heating Oil Tank
7. Buried Petroleum Tank
8. 1=Shoreline 2= Swimming Pool
9. Downspout/ Yard Hydrant
10. Privy
11. Foundation Drain to Clearwater
12. Foundation Drain to Sewer
13. Building Drain 1=Cast Iron or Plastic 2=Other
14. Building Sewer 1=Gravity 2=Pressure 1=Cast Iron or Plastic 2=Other
15. Collector Sewer: ___ units ___ in . diam.
16. Clearwater Sump
17. Wastewater Sump
18. Paved Animal Barn Pen
19. Animal Yard or Shelter
20. Silo
21. Barn Gutter
22. Manure Pipe 1=Gravity 2=Pressure 1=Cast iron or Plastic 2=Other
23. Other manure Storage
24. Ditch
25. Other NR 812 Waste Source

5. Drillhole Dimensions and Construction Method

Dia.(in.)	From (ft)	To (ft)
6.0	surface	39

Upper Enlarged Drillhole
-- 1. Rotary - Mud Circulation
-- 2. Rotary - Air
-- 3. Rotary - Air and Foam
-- 4. Drill-Through Casing Hammer
-- 5. Reverse Rotary
-- 6. Cable-tool Bit _ n. dia
-- 7. Temp. Outer Casing _ in. dia. _____ depth ft. Removed ?
Other
Lower Open Bedrock

6. Casing Liner Screen

Dia. (in.)	Material, Weight, Specification Manufacturer & Method of Assembly	From (ft.)	To (ft.)
6.0	PE A53 280 SAWHILL	surface	36

Dia.(in.)	Screen type, material & slot size	From	To
5.6	JOHNSON SS	36	39

7. Grout or Other Sealing Material

Method / Kind of Sealing Material	From (ft.)	To (ft.)	# Sacks Cement
NONE REQUIRED	surface	0.0	

Geology Codes	8. Geology Type, Caving/Noncaving, Color, Hardness, etc	From (ft.)	To (ft.)
_Y_	SAND @ GRAVEL	0	39

9. Static Water Level
21.0 feet B ground surface
A=Above B=Below

10. Pump Test
Pumping level 24.0 ft. below surface
Pumping at 30.0 GP M 1.0 Hrs

11. Well Is: 12 in. A Grade
A=Above B=Below
Developed? Y
Disinfected? Y
Capped? Y

12. Did you notify the owner of the need to permanently abandon and fill all unused wells on this property? N
If no, explain OWNER

13. Initials of Well Constructor or Supervisory Driller JJ Date Signed 8/17/95
Initials of Drill Rig Operator (Mandatory unless same as above) Date Signed

Additonal Comments?
Owner Sent Label? Y
Variance Issued?
More Geology?

Batch 369

Replacement (5)

WISCONSIN UNIQUE WELL NUMBER **OI532**
Source: WELL CONSTRUCTION

State of Wi-Private Water Systems-DG/2
Department Of Natural Resources, Box 7921
Madison, WI 53707

Form 3300-77A
(Rev 02/02)bw

Property Owner: PIERCE, WM
Telephone Number: - -
Mailing Address: 13951 ST HWY 13 S
City: WISCONSIN RAPIDS | State: WI | Zip Code: 54494
County of Well Location: 72 WOOD | Co Well Permit No: W | Well Completion Date: November 1, 2000

Depth 42 FT

1. Well Location
T=Town C=City V=Village: T of SARATOGA | Fire#
Street Address or Road Name and Number: 13951 HWY 13
Subdivision Name | Lot# | Block #
Gov't Lot or NE 1/4 of SE 1/4 of Section 29 T 21 N;R 6 E
Latitude Deg. Min.
Longitude Deg Min.

Well Constructor: BERTRAM JUNEMANN WELL DRILLING | License #: 84 | Facility ID (Public)
Address: 7285 CTY TRK S | Public Well Plan Approval#
City: RUDOLPH | State: WI | Zip Code: 54475 | Date Of Approval
Hicap Permanent Well # | Common Well # | Specific Capacity gpm/ft

2. Well Type 2 (See item 12 below) | Lat/Long Method
1=New 2=Replacement 3=Reconstruction
of previous unique well # _____ constructed in _____
Reason for replaced or reconstructed Well?
VOLUME & PRESSURE
1 1=Drilled 2=Driven Point 3=Jetted 4=Other

3. Well Serves P # of homes and or HOME (eg: barn, restaurant, church, school, industry, etc.)
M=Munic O=OTM N=NonCom P=Private Z=Other X=NonPot A=Anode L=Loop H=Drillhole
High Capacity: Well? N Property? N

4. Is the well located upslope or sideslope and not downslope from any contamination sources, including those on neighboring properties? Y
Well located in floodplain? N
Distance in feet from well to nearest: (including proposed)

1. Landfill
8 2. Building Overhang
50 3. 1=Septic 2= Holding Tank
60 4. Sewage Absorption Unit
5. Nonconforming Pit
6. Buried Home Heating Oil Tank
7. Buried Petroleum Tank
8. 1=Shoreline 2= Swimming Pool
9. Downspout/ Yard Hydrant
10. Privy
11. Foundation Drain to Clearwater
12. Foundation Drain to Sewer
13. Building Drain 1=Cast Iron or Plastic 2=Other
14. Building Sewer 1=Gravity 2=Pressure 1=Cast Iron or Plastic 2=Other
15. Collector Sewer: ___ units ___ in . diam.
16. Clearwater Sump
17. Wastewater Sump
18. Paved Animal Barn Pen
19. Animal Yard or Shelter
20. Silo
21. Barn Gutter
22. Manure Pipe 1=Gravity 2=Pressure 1=Cast iron or Plastic 2=Other
23. Other manure Storage
24. Ditch
25. Other NR 812 Waste Source

5. Drillhole Dimensions and Construction Method

Dia.(in.)	From (ft)	To (ft)
6.0	surface	42

Upper Enlarged Drillhole
-- 1. Rotary - Mud Circulation
-- 2. Rotary - Air
-- 3. Rotary - Air and Foam
-- 4. Drill-Through Casing Hammer
-- 5. Reverse Rotary
-- 6. Cable-tool Bit _ n. dia
-- 7. Temp. Outer Casing _ in. dia. _____ depth ft. Removed ?
Other

Lower Open Bedrock

Geology Codes	8. Geology Type, Caving/Noncaving, Color, Hardness, etc	From (ft.)	To (ft.)
_Y_	SAND & GRAVEL	0	42

6. Casing Liner Screen

Dia. (in.)	Material, Weight, Specification Manufacturer & Method of Assembly	From (ft.)	To (ft.)
6.0	P.E. A-53 .280 IPSCO	surface	39

Dia.(in.)	Screen type, material & slot size	From	To
6.0	TELE. JOHNSON S.S. 1I SLOT	39	42

9. Static Water Level
29.0 feet B ground surface A=Above B=Below

10. Pump Test
Pumping level 32.0 ft. below surface
Pumping at 15.0 GP M 1.0 Hrs

11. Well Is: 12 in. A Grade A=Above B=Below
Developed? Y
Disinfected? Y
Capped? Y

7. Grout or Other Sealing Material
Method MOUNDED

Kind of Sealing Material	From (ft.)	To (ft.)	# Sacks Cement
BENTONITE	surface		1 S

12. Did you notify the owner of the need to permanently abandon and fill all unused wells on this property? Y
If no, explain

13. Initials of Well Constructor or Supervisory Driller: JJ | Date Signed: 11/15/00
Initials of Drill Rig Operator (Mandatory unless same as above): JUJ | Date Signed

Additonal Comments?
Owner Sent Label? Y
Variance Issued?
More Geology?

Batch 707

Replacement 1 (6)

WISCONSIN UNIQUE WELL NUMBER **SI208**
Source: WELL CONSTRUCTION

State of Wi-Private Water Systems-DG/2
Department Of Natural Resources, Box 7921
Madison, WI 53707

Form 3300-77A
(Rev 02/02)bw

Depth 46 FT

Property Owner: IRONSIDE, LARRY	Telephone Number: - -
Mailing Address: 2228 BIRON DR E	
City: WISCONSIN RAPIDS	State: WI / Zip Code: 54494
County of Well Location: 72 WOOD	Co Well Permit No: W / Well Completion Date: July 19, 2004
Well Constructor: BERTRAM JUNEMANN WELL DRILLING	License #: 84 / Facility ID (Public):
Address: 7285 CTY TRK S	Public Well Plan Approval#:
City: RUDOLPH	State: WI / Zip Code: 54475 / Date Of Approval:
Hicap Permanent Well #	Common Well # / Specific Capacity: gpm/ft

1. Well Location
T=Town C=City V=Village
T of SARATOGA
Fire#
Street Address or Road Name and Number: 14241 HWY 13
Subdivision Name / Lot# / Block #
Gov't Lot or SE 1/4 of SE 1/4 of Section 29 T 21 N;R 6 E
Latitude Deg. Min.
Longitude Deg Min.

2. Well Type 2 (See item 12 below) Lat/Long Method
1=New 2=Replacement 3=Reconstruction
of previous unique well # _____ constructed in _____
Reason for replaced or reconstructed Well?
POINT IN BASEMENT
1 1=Drilled 2=Driven Point 3=Jetted 4=Other

3. Well Serves # of homes and or
P (eg: barn, restaurant, church, school, industry, etc.)
M=Munic O=OTM N=NonCom P=Private Z=Other X=NonPot A=Anode L=Loop H=Drillhole
High Capacity: Well? N Property? N

4. Is the well located upslope or sideslope and not downslope from any contamination sources, including those on neighboring properties? Y
Well located in floodplain? N
Distance in feet from well to nearest: (including proposed)

1. Landfill
25 2. Building Overhang
45 3. 1=Septic 2= Holding Tank
60 4. Sewage Absorption Unit
5. Nonconforming Pit
6. Buried Home Heating Oil Tank
7. Buried Petroleum Tank
8. 1 1=Shoreline 2= Swimming Pool
9. Downspout/ Yard Hydrant
10. Privy
11. Foundation Drain to Clearwater
12. Foundation Drain to Sewer
13. Building Drain 1=Cast Iron or Plastic 2=Other
14. Building Sewer 1=Gravity 2=Pressure 1=Cast Iron or Plastic 2=Other
15. Collector Sewer: ___ units ___ in . diam.
16. Clearwater Sump
35 17. Wastewater Sump
18. Paved Animal Barn Pen
19. Animal Yard or Shelter
20. Silo
21. Barn Gutter
22. Manure Pipe 1=Gravity 2=Pressure 1=Cast iron or Plastic 2=Other
23. Other manure Storage
24. Ditch
25. Other NR 812 Waste Source

5. Drillhole Dimensions and Construction Method

Dia.(in.)	From (ft)	To (ft)
6.0	surface	46

Upper Enlarged Drillhole
-- 1. Rotary - Mud Circulation
-- 2. Rotary - Air
-- 3. Rotary - Air and Foam
-- 4. Drill-Through Casing Hammer
-- 5. Reverse Rotary
-- 6. Cable-tool Bit _ n. dia
-- 7. Temp. Outer Casing _ in. dia. _____ depth ft. Removed ?
Other
Lower Open Bedrock

Geology Codes	8. Geology Type, Caving/Noncaving, Color, Hardness, etc	From (ft.)	To (ft.)
__S_	SAND	0	21
__C_	CLAY	21	24
__Y_	SAND & GRAVEL	24	46

6. Casing Liner Screen

Dia. (in.)	Material, Weight, Specification Manufacturer & Method of Assembly	From (ft.)	To (ft.)
6.0	PE A53 .280 PARAGON	surface	43

Dia.(in.)	Screen type, material & slot size	From	To
6.0	TELE ALLOY 12 SLOT	43	46

9. Static Water Level
25.0 feet B ground surface
A=Above B=Below

10. Pump Test
Pumping level 29.0 ft. below surface
Pumping at 25.0 GP M 1.0 Hrs

11. Well Is: 16 in. A Grade
A=Above B=Below
Developed? Y
Disinfected? Y
Capped? Y

7. Grout or Other Sealing Material
Method MOUNDED

Kind of Sealing Material	From (ft.)	To (ft.)	# Sacks Cement
BENTONITE	surface		1 S

12. Did you notify the owner of the need to permanently abandon and fill all unused wells on this property? N
If no, explain OWNER

13. Initials of Well Constructor or Supervisory Driller JJ Date Signed 7/22/04
Initials of Drill Rig Operator (Mandatory unless same as above) JJJ Date Signed 7/22/04

Additonal Comments?
Owner Sent Label? Y
Variance Issued?
More Geology?

Batch 937

(7)

WISCONSIN UNIQUE WELL NUMBER **TG032**

Source: WELL CONSTRUCTION

State of Wi-Private Water Systems-DG/2
Department Of Natural Resources, Box 7921
Madison, WI 53707

Form 3300-77A
(Rev 02/02)bw

Depth 53 FT

Property Owner: ALFT, JOHN	Telephone Number: 715-572-2685
Mailing Address: 13811 STATE HWY 13 S	
City: WISCONSIN RAPIDS	State: WI / Zip Code: 54494
County of Well Location: 72 WOOD	Co Well Permit No: W / Well Completion Date: December 21, 2005
Well Constructor: HAUPT WELL & PUMP CO INC	License #: 529 / Facility ID (Public):
Address: DAVID HAUPT	Public Well Plan Approval#:
City: AUBURNDALE	State: WI / Zip Code: 54412 / Date Of Approval:
Hicap Permanent Well #	Common Well # / Specific Capacity: 5 gpm/ft

1. Well Location

T=Town C=City V=Village: T of SARATOGA

Fire#: 13811

Street Address or Road Name and Number: 13811 STATE HWY 13 S

Subdivision Name: CSM 4062 | Lot# | Block #

Gov't Lot or NE 1/4 of SE 1/4 of Section 29 T 21 N;R 6 E

Latitude Deg. 44 Min. 16.15

Longitude Deg 89 Min. 48.55

2. Well Type 1 (See item 12 below)

1=New 2=Replacement 3=Reconstruction

of previous unique well # _____ constructed in _____

Lat/Long Method: GPS008

Reason for replaced or reconstructed Well?

1 1=Drilled 2=Driven Point 3=Jetted 4=Other

3. Well Serves P # of homes and or (eg: barn, restaurant, church, school, industry, etc.)

M=Munic O=OTM N=NonCom P=Private Z=Other X=NonPot A=Anode L=Loop H=Drillhole

High Capacity: Well? N Property? N

4. Is the well located upslope or sideslope and not downslope from any contamination sources, including those on neighboring properties? Y

Well located in floodplain? N

Distance in feet from well to nearest: (including proposed)

1. Landfill
8 2. Building Overhang
35 3. 1=Septic 2= Holding Tank
65 4. Sewage Absorption Unit
5. Nonconforming Pit
6. Buried Home Heating Oil Tank
7. Buried Petroleum Tank
8. 1 1=Shoreline 2= Swimming Pool
9. Downspout/ Yard Hydrant
10. Privy
11. Foundation Drain to Clearwater
12. Foundation Drain to Sewer
13. Building Drain 1=Cast Iron or Plastic 2=Other
14. Building Sewer 1=Gravity 2=Pressure 1=Cast Iron or Plastic 2=Other
15. Collector Sewer: ___ units ___ in . diam.
16. Clearwater Sump
17. Wastewater Sump
18. Paved Animal Barn Pen
19. Animal Yard or Shelter
20. Silo
21. Barn Gutter
22. Manure Pipe 1=Gravity 2=Pressure 1=Cast iron or Plastic 2=Other
23. Other manure Storage
24. Ditch
25. Other NR 812 Waste Source

5. Drillhole Dimensions and Construction Method

Dia.(in.)	From (ft)	To (ft)
6.0	surface	53

Upper Enlarged Drillhole
-- 1. Rotary - Mud Circulation
-- 2. Rotary - Air
-- 3. Rotary - Air and Foam
-- 4. Drill-Through Casing Hammer
-- 5. Reverse Rotary
-- 6. Cable-tool Bit _ n. dia
-- 7. Temp. Outer Casing _ in. dia. _____ depth ft. Removed ?
Other

Lower Open Bedrock

Geology Codes	8. Geology Type, Caving/Noncaving, Color, Hardness, etc	From (ft.)	To (ft.)
_NS_	FINE SAND	0	19
_NYM	SILTY FINE SAND/GRAVEL	19	49
__GS	GRAVEL PEA/SAND MIX	49	53

6. Casing Liner Screen

Dia. (in.)	Material, Weight, Specification Manufacturer & Method of Assembly	From (ft.)	To (ft.)
6.0	NEW STEEL 18.97 A53 WHEATLAND PE WELD	surface	50

Dia.(in.)	Screen type, material & slot size	From	To
5.5	.012 SS JOHNSON	50	53

9. Static Water Level
33.0 feet B ground surface A=Above B=Below

10. Pump Test
Pumping level 38.0 ft. below surface
Pumping at 25.0 GP M 1.5 Hrs

11. Well Is: 16 in. A Grade A=Above B=Below
Developed? Y
Disinfected? Y
Capped? Y

7. Grout or Other Sealing Material
Method MOUNDED

Kind of Sealing Material	From (ft.)	To (ft.)	# Sacks Cement
#8 GRANULAR BENSEAL	surface		2.5 S

12. Did you notify the owner of the need to permanently abandon and fill all unused wells on this property?
If no, explain

13. Initials of Well Constructor or Supervisory Driller: DH Date Signed 12/22/05

Initials of Drill Rig Operator (Mandatory unless same as above): AH Date Signed 12/21/05

Additonal Comments? Variance Issued?
Owner Sent Label? Y More Geology?

21834087 **Batch** 1015

(8)

WISCONSIN UNIQUE WELL NUMBER **HO099**

Source: WELL CONSTRUCTION

State of Wi-Private Water Systems-DG/2
Department Of Natural Resources, Box 7921
Madison, WI 53707

Form 3300-77A
(Rev 02/02)bw

Depth 30 FT

Property Owner: KNUTH, RANDY	Telephone Number: 715-325-2966
Mailing Address: 11711 BELL RD	
City: WIS RAPIDS	State: WI / Zip Code: 54494
County of Well Location: 72 WOOD	Co Well Permit No: W / Well Completion Date: December 23, 1993
Well Constructor: BRIAN HEEG	License #: 355 / Facility ID (Public):
Address: 5069 E CTY F	Public Well Plan Approval#:
City: AUBURNDALE	State: WI / Zip Code: 54412 / Date Of Approval:
Hicap Permanent Well #	Common Well # / Specific Capacity: gpm/ft

1. Well Location

T=Town C=City V=Village: T of SARATOGA

Fire#:

Street Address or Road Name and Number:

Subdivision Name: / Lot#: / Block #:

Gov't Lot **or** NE 1/4 of NE 1/4 of Section 20 T 21 N;R 6 E

Latitude Deg. Min.

Longitude Deg Min.

2. Well Type 1 (See item 12 below) Lat/Long Method

1=New 2=Replacement 3=Reconstruction

of previous unique well # _____ constructed in 0

Reason for replaced or reconstructed Well?

HOUSE

2 1=Drilled 2=Driven Point 3=Jetted 4=Other

3. Well Serves # of homes and or

P (eg: barn, restaurant, church, school, industry, etc.)

M=Munic O=OTM N=NonCom P=Private Z=Other X=NonPot A=Anode L=Loop H=Drillhole

High Capacity: Well? N Property? N

4. Is the well located upslope or sideslope and not downslope from any contamination sources, including those on neighboring properties? Y

Well located in floodplain? N

Distance in feet from well to nearest: (including proposed)

1. Landfill
7 2. Building Overhang
80 3. 1=Septic 2= Holding Tank
4. Sewage Absorption Unit
5. Nonconforming Pit
6. Buried Home Heating Oil Tank
7. Buried Petroleum Tank
8. 1=Shoreline 2= Swimming Pool
9. Downspout/ Yard Hydrant
10. Privy
11. Foundation Drain to Clearwater
12. Foundation Drain to Sewer
13. Building Drain 1=Cast Iron or Plastic 2=Other
14. Building Sewer 1=Gravity 2=Pressure 1=Cast Iron or Plastic 2=Other
15. Collector Sewer: ___ units ___ in . diam.
16. Clearwater Sump
17. Wastewater Sump
18. Paved Animal Barn Pen
19. Animal Yard or Shelter
20. Silo
21. Barn Gutter
22. Manure Pipe 1=Gravity 2=Pressure 1=Cast iron or Plastic 2=Other
23. Other manure Storage
24. Ditch
25. Other NR 812 Waste Source

5. Drillhole Dimensions and Construction Method

Dia.(in.)	From (ft)	To (ft)
2.0	surface	30

Upper Enlarged Drillhole

-- 1. Rotary - Mud Circulation ----------
-- 2. Rotary - Air ----------
-- 3. Rotary - Air and Foam ----------
-- 4. Drill-Through Casing Hammer
-- 5. Reverse Rotary
-- 6. Cable-tool Bit _ n. dia ----------
-- 7. Temp. Outer Casing _ in. dia. _____ depth ft. Removed ?

X Other DRIVEN

Lower Open Bedrock

Geology Codes	8. Geology Type, Caving/Noncaving, Color, Hardness, etc	From (ft.)	To (ft.)
__S_	SAND	0	30

6. Casing Liner Screen

Dia. (in.)	Material, Weight, Specification Manufacturer & Method of Assembly	From (ft.)	To (ft.)
2.0	STEEL ASTM A53 SAWHILL USA T@C	surface	27

Dia.(in.)	Screen type, material & slot size	From	To
2.0	7 SLOT STAINLESS POINT	27	30

9. Static Water Level

12.0 feet B ground surface A=Above B=Below

10. Pump Test

Pumping level 30.0 ft. below surface

Pumping at 8.0 GP M 2.0 Hrs

11. Well Is: 18 in. A Grade A=Above B=Below

Developed? Y

Disinfected? Y

Capped? Y

7. Grout or Other Sealing Material

Method / Kind of Sealing Material	From (ft.)	To (ft.)	# Sacks Cement
	surface		

12. Did you notify the owner of the need to permanently abandon and fill all unused wells on this property?

If no, explain

13. Initials of Well Constructor or Supervisory Driller: BH Date Signed: 1/4/94

Initials of Drill Rig Operator (Mandatory unless same as above): BH Date Signed: 1/4/94

Additonal Comments?

Owner Sent Label? Y

Variance Issued?

More Geology?

Batch 270

(9)

WISCONSIN UNIQUE WELL NUMBER
Source: WELL CONSTRUCTION **UD547**

State of Wi-Private Water Systems-DG/2
Department Of Natural Resources, Box 7921
Madison, WI 53707

Form 3300-77A
(Rev 02/02)bw

Depth 46 FT

Property Owner: ST PETER, PATRICK	Telephone Number: - -
Mailing Address: 11220 HWY 13 S	
City: WISCONSIN RAPIDS	State: WI / Zip Code: 54457
County of Well Location: 29 JUNEAU	Co Well Permit No: W / Well Completion Date: August 16, 2007
Well Constructor: BRIAN M PATTEN	License #: 6619 / Facility ID (Public)
Address: PATTENS SEPTIC & WELL SERVICE LLC	Public Well Plan Approval#
City: ARKDALE	State: WI / Zip Code: 54613 / Date Of Approval
Hicap Permanent Well #	Common Well # / Specific Capacity gpm/ft

1. Well Location
T=Town C=City V=Village
T of SARATOGA
Fire# 11220
Street Address or Road Name and Number: 11220 HWY 13 S
Subdivision Name | Lot# | Block #
Gov't Lot or NW 1/4 of NE 1/4 of Section 20 T 21 N;R 6 E
Latitude Deg. Min.
Longitude Deg Min.

2. Well Type 3 (See item 12 below) Lat/Long Method
1=New 2=Replacement 3=Reconstruction
of previous unique well # _____ constructed in _____
Reason for replaced or reconstructed Well?
NO WATER
3 1=Drilled 2=Driven Point 3=Jetted 4=Other

3. Well Serves # of homes and or
P (eg: barn, restaurant, church, school, industry, etc.)
M=Munic O=OTM N=NonCom P=Private Z=Other X=NonPot A=Anode L=Loop H=Drillhole
High Capacity: Well? N Property? N

4. Is the well located upslope or sideslope and not downslope from any contamination sources, including those on neighboring properties?
Well located in floodplain? N
Distance in feet from well to nearest: (including proposed)

1. Landfill
2. Building Overhang
3. 1=Septic 2= Holding Tank
4. Sewage Absorption Unit
5. Nonconforming Pit
6. Buried Home Heating Oil Tank
7. Buried Petroleum Tank
8. 1=Shoreline 2= Swimming Pool
9. Downspout/ Yard Hydrant
10. Privy
11. Foundation Drain to Clearwater
12. Foundation Drain to Sewer
13. Building Drain 1=Cast Iron or Plastic 2=Other
14. Building Sewer 1=Gravity 2=Pressure 1=Cast Iron or Plastic 2=Other
15. Collector Sewer: ___ units ___ in . diam.
16. Clearwater Sump
17. Wastewater Sump
18. Paved Animal Barn Pen
19. Animal Yard or Shelter
20. Silo
21. Barn Gutter
22. Manure Pipe 1=Gravity 2=Pressure 1=Cast iron or Plastic 2=Other
23. Other manure Storage
24. Ditch
25. Other NR 812 Waste Source

5. Drillhole Dimensions and Construction Method

Dia.(in.)	From (ft)	To (ft)
2.0	surface	42
1.3	42	46

Upper Enlarged Drillhole
-- 1. Rotary - Mud Circulation
-- 2. Rotary - Air
-- 3. Rotary - Air and Foam
X -- 4. Drill-Through Casing Hammer
-- 5. Reverse Rotary
-- 6. Cable-tool Bit _ n. dia
-- 7. Temp. Outer Casing _ in. dia. _____ depth ft. Removed ?
Other

Lower Open Bedrock

Geology Codes	8. Geology Type, Caving/Noncaving, Color, Hardness, etc	From (ft.)	To (ft.)
__S_	SAND	0	46

6. Casing Liner Screen

Dia. (in.)	Material, Weight, Specification Manufacturer & Method of Assembly	From (ft.)	To (ft.)
2.0	WHEATLAND GALVANIZED R & D THREADED ASTM #589F 3.75 # PER FT	surface	42

Dia.(in.)	Screen type, material & slot size	From	To
1.3	JOHNSON STAINLESS 7 SLOT	42	46

9. Static Water Level
19.0 feet B ground surface
A=Above B=Below

10. Pump Test
Pumping level 25.0 ft. below surface
Pumping at 15.0 GP M 1.0 Hrs

11. Well Is: 14 in. A Grade
A=Above B=Below
Developed? Y
Disinfected? Y
Capped? Y

7. Grout or Other Sealing Material

Method / Kind of Sealing Material	From (ft.)	To (ft.)	# Sacks Cement
	surface		

12. Did you notify the owner of the need to permanently abandon and fill all unused wells on this property?
If no, explain

13. Initials of Well Constructor or Supervisory Driller: BP Date Signed 9/28/07
Initials of Drill Rig Operator (Mandatory unless same as above) Date Signed

Additonal Comments? Variance Issued?
Owner Sent Label? Y More Geology?

26877049 **Batch** 1098

N:\REA12\Wysocki120032_1\gis\WoodCountyGIS\WoodCoCAD\countours.DWG

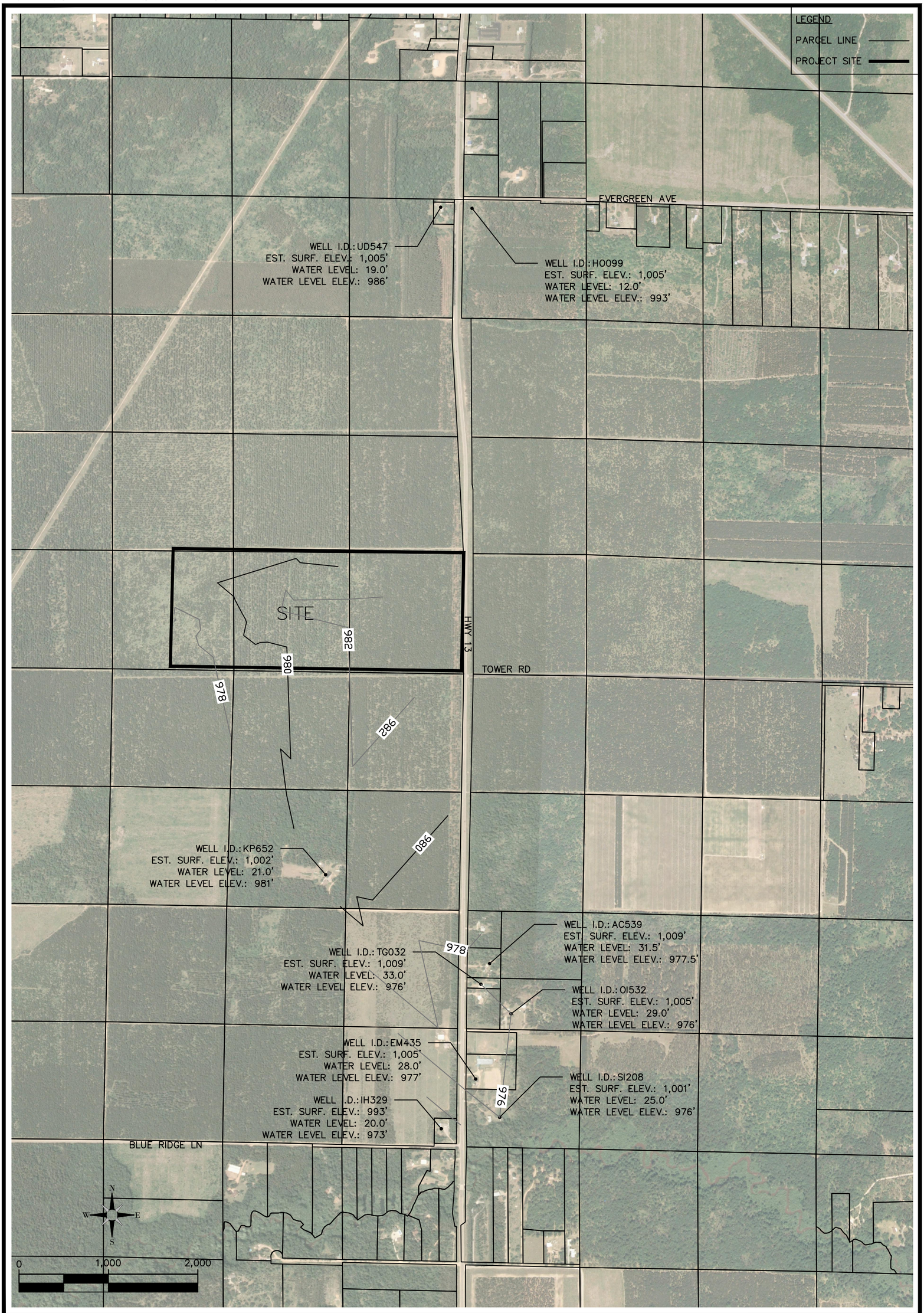

FIGURE 1

DATE: AUG 2013
DRAWN: EML
CHECKED: DW
APPROVED: RJP
DRAWING NAME: countours.DWG
PROJECT NUMBER: 120032.1

WELL LOG MAP
GOLDEN SANDS DAIRY
WOOD COUNTY, WISCONSIN
TOWN OF SARATOGA
T 21N R 06E SECTIONS 21 & 29

RESOURCE ENGINEERING ASSOCIATES, INC.
Resource Engineering Associates, Inc.
3510 Parmenter St., Suite 100
Middleton, Wisconsin 53562-2507
Phone: 608-831-5522
Fax: 608-831-6564
Web: www.reaeng.com

REVISIONS:
DATE
DATE
DATE
DATE
DATE

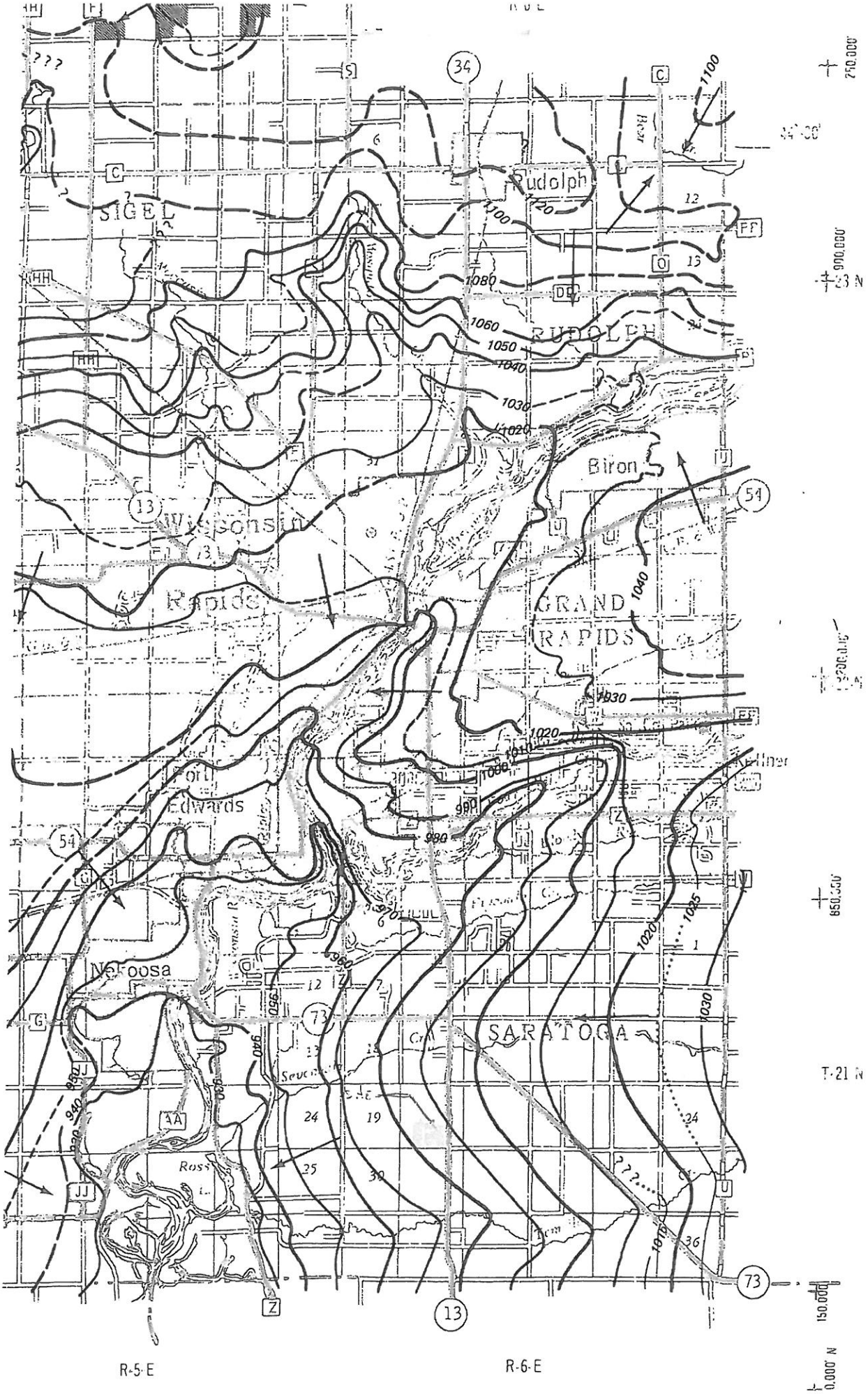
Rudolph
SIGEL
RUDOLPH
Biron
Wisconsin
Rapids
GRAND
RAPIDS
Port
Edwards
Nekoosa
SARATOGA
Ross
1100
1080
1060
1050
1040
1030
1020
1010
1000
990
980
970
960
950
940
930
1025
T-21 N
R-5-E
R-6-E
PORTAGE CO.

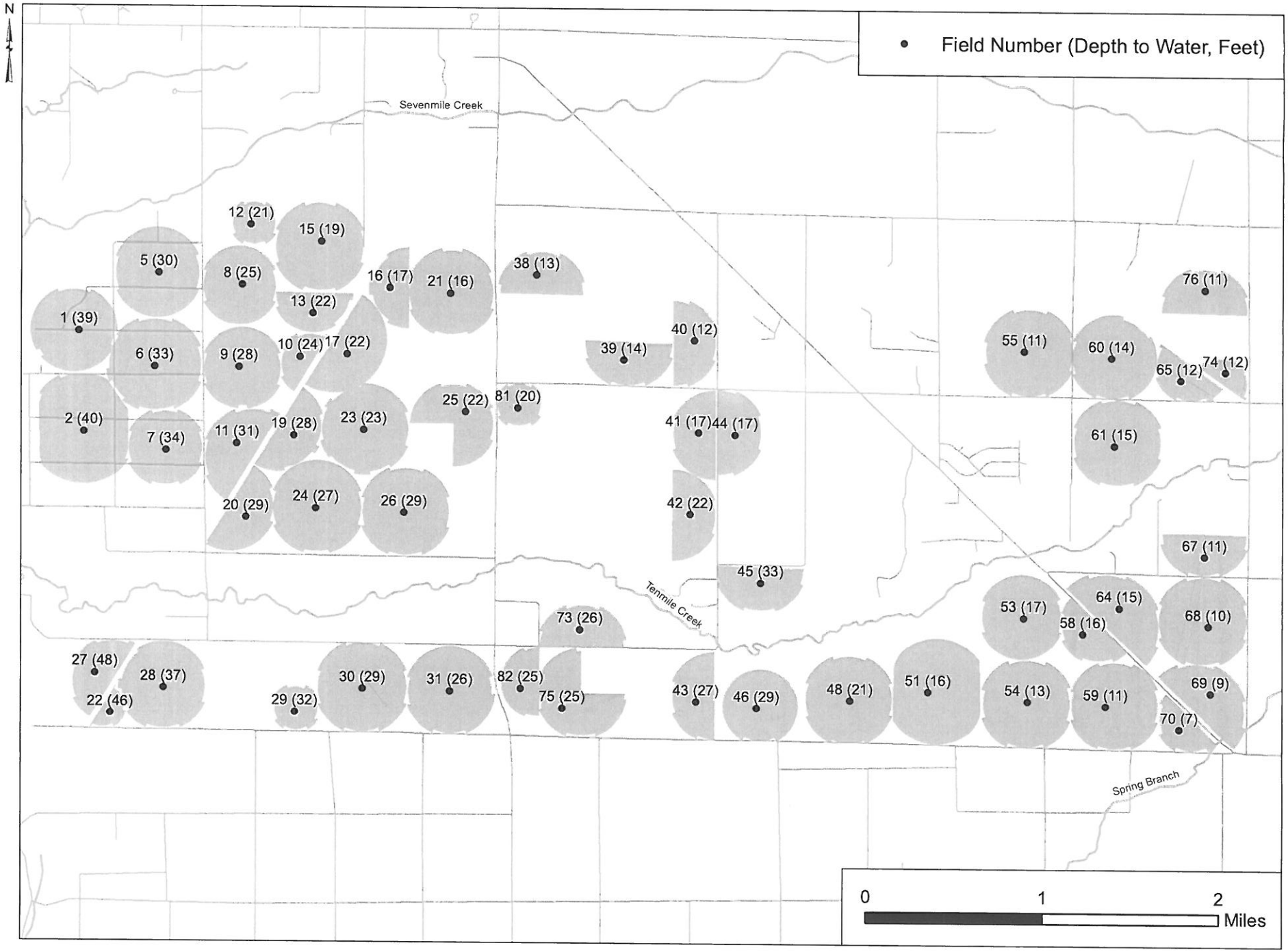

Depth to Water for Potential Fields under Base Conditions (Existing Irrigation Pumping Only)

Roach & Associates, LLC

Dairy Business and Management Consulting
Environmental Engineering
856 N Main Street • Seymour, WI 54165
Phone 920-833-6340 • Fax 920-833-9851 • E-mail john@jmroach.com

January 16, 2013

TO: Carl Dostal

FR: John Roach

RE: Borrow Pit Test Results

Enclosed please find the soil lab test results for the samples at the borrow pit.

CQM, INC.

SIEVE ANALYSIS OF COARSE TO FINE AGGREGATES (ASTM D1140)

GENERAL DATA:

Client:	Roach & Associates, LLC
Project:	Opitz Heifers
Location Sampled:	Borrow S-A
Sample No:	RA-OH-S-A
Depth of Sample:	
Date Received:	1/3/13
Sample Designated For:	Soil Classification
Source of Sample:	
Munsell Color Code:	10YR 5/4
Date Sampled:	12/12/12

LABORATORY DATA:

Date Tested:	January 4-7, 2013
Test Performed By:	JLN

24 Hrs. Turn Around:	NO
Washed Gradation:	YES

Dry Weight of Soil (gms): 240.8

Sieve Size	Weight Retained	% Retained	% Passing	Project Specification % Passing by Weight	Source of Specification
3"					Project Specification
1 1/2"					
1"					
3/4"					
1/2"	0.0	0.0	100.0		
3/8"	1.7	0.7	99.3		
#4	4.0	1.7	97.6		
#10	4.0	1.7	95.9		
#40	6.5	2.7	93.2		
#100	10.8	4.5	88.7		
#200	5.4	2.2	86.5	20-100	

REVIEWED BY:	Robert R Rowe
DATE REVIEWED:	1/7/13

Remarks:

GRAIN SIZE DISTRIBUTION CURVE

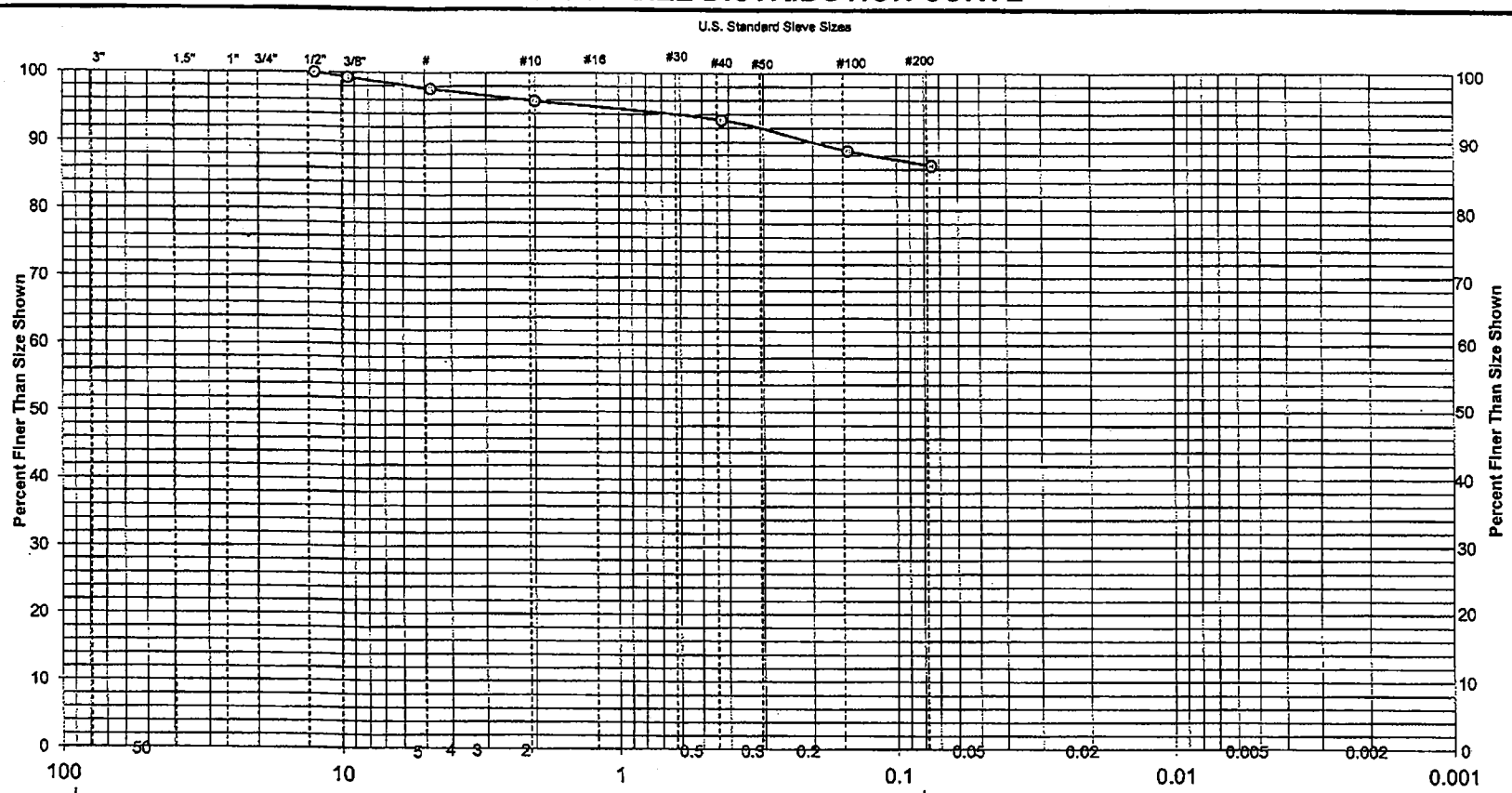

Gravel		Sand			
Coarse	Fine	Coarse	Medium	Fine	Silt - Clay
	2.4%	1.7%	2.7%	6.7%	86.5%

Soil Classification: LEAN CLAY, yellowish brown (CL)			
Location Sampled: Borrow S-A	Elevation or Depth:	Date Sampled: 12/12/12	
Sample Number: RA-OH-S-A	Sampled Moisture Content (%): 26.2	Report No.: S-A	
Sample Source:	CQM, INC.		
Atterberg Limits: LL= 36.0 PL= 16.4 PI= 19.6	Client: Roach & Associates, LLC		
Munsell Color Code: 10YR 5/4	Project: Opitz Heifers	Page:	2
Date Received: 1/3/13	Prepared by: Michael R. Andraschko	Date:	1/7/13
Coefficients: Cc= Cu=	Checked by: Robert R. Rouse	Date:	1/7/13

CQM, INC.

SIEVE ANALYSIS OF COARSE TO FINE AGGREGATES (ASTM D1140)

GENERAL DATA:

Client:	Roach & Associates, LLC
Project:	Opitz Helfers
Location Sampled:	Borrow S-B
Sample No:	RA-OH-S-B
Depth of Sample:	
Date Received:	1/3/13
Sample Designated For:	Soil Classification
Source of Sample:	
Munsell Color Code:	10YR 5/3
Date Sampled:	12/12/12

LABORATORY DATA:

Date Tested:	January 4-7, 2013
Test Performed By:	JLN

24 Hrs. Turn Around:	NO
Washed Gradation:	YES

Dry Weight of Soil (gms): 264.0

Sieve Size	Weight Retained	% Retained	% Passing	Project Specification % Passing by Weight	Source of Specification
3"					Project Specification
1 1/2"					
1"					
3/4"					
1/2"					
3/8"					
#4	0.0	0.0	100.0		
#10	1.8	0.7	99.3		
#40	4.2	1.6	97.7		
#100	14.5	5.5	92.2		
#200	5.4	2.0	90.2	20-100	

REVIEWED BY:	Robert R. Rouse
DATE REVIEWED:	1/7/13

Remarks:

1/7/2013 TLS G-RAOHSB

GRAIN SIZE DISTRIBUTION CURVE

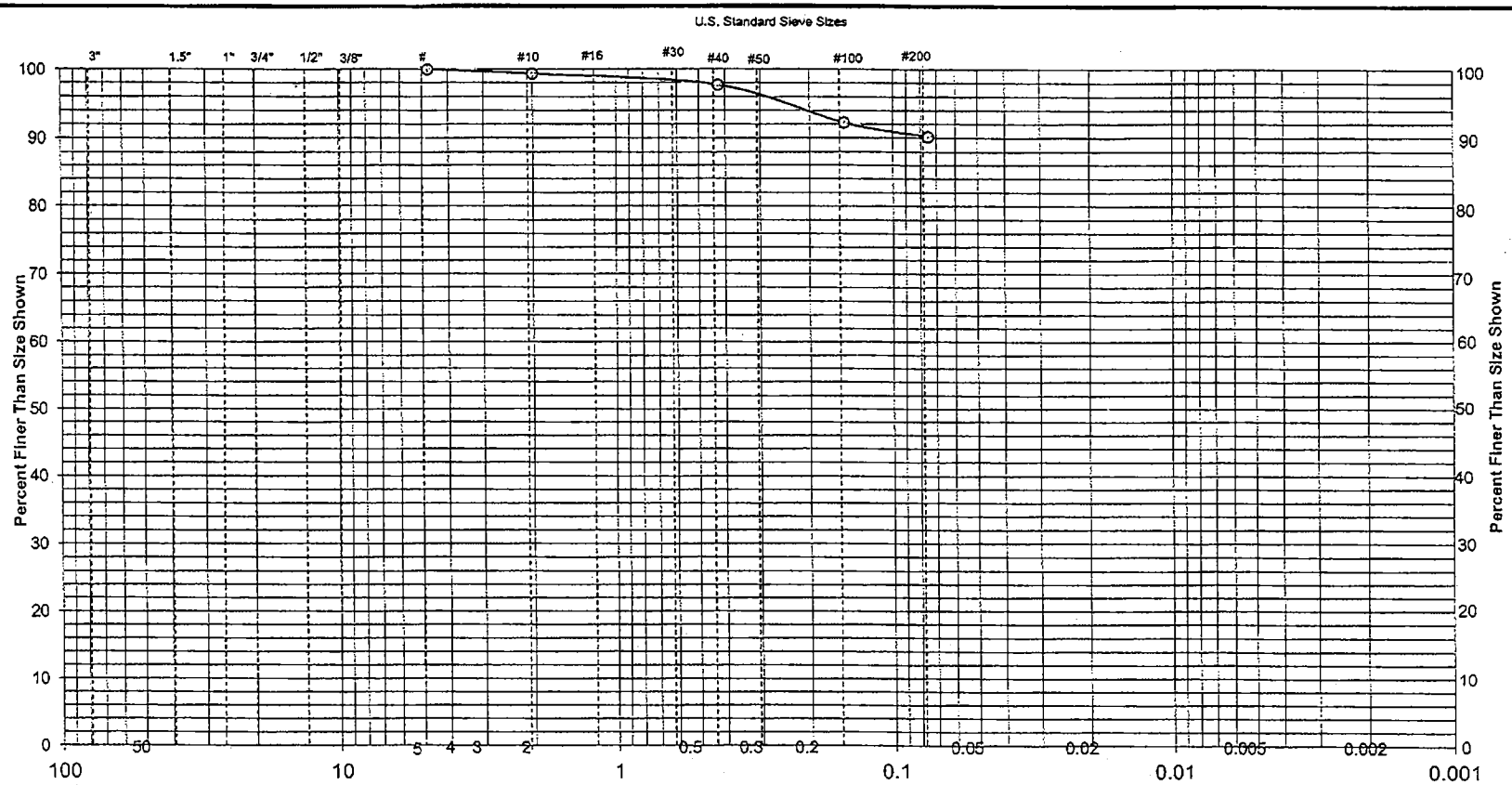

Gravel		Sand			
Coarse	Fine	Coarse	Medium	Fine	Silt - Clay
		0.7%	1.6%	7.5%	90.2%

Soil Classification: LEAN CLAY, brown (CL)			
Location Sampled: Borrow S-B	Elevation or Depth:	Date Sampled: 12/12/12	
Sample Number: RA-OH-S-B	Sampled Moisture Content (%): 27.0	Report No.: S-B	
Sample Source:	CQM, INC.		
Atterberg Limits: LL= 32.0 PL= 15.7 PI= 16.3	Client: Roach & Associates, LLC		
Munsell Color Code: 10YR 5/3	Project: Opitz Heifers	Page:	2
Date Received: 1/3/13	Prepared by: Michael R. Andraschko	Date:	1/7/13
Coefficients: Cc= Cu=	Checked by: Robert R. Rouse	Date:	1/7/13

CQM, INC.

SIEVE ANALYSIS OF COARSE TO FINE AGGREGATES (ASTM D1140)

GENERAL DATA:

Client:	Roach & Associates, LLC
Project:	Opitz Heifers
Location Sampled:	Borrow S-C
Sample No:	RA-OH-S-C
Depth of Sample:	
Date Received:	1/3/13
Sample Designated For:	Soil Classification
Source of Sample:	
Munsell Color Code:	10YR 5/4
Date Sampled:	12/12/12

LABORATORY DATA:

Date Tested:	January 4-7, 2012
Test Performed By:	JLN

24 Hrs. Turn Around:	NO
Washed Gradation:	YES

Dry Weight of Soil (gms): 276.7

Sieve Size	Weight Retained	% Retained	% Passing	Project Specification % Passing by Weight	Source of Specification
3"					Project Specification
1 1/2"					
1"					
3/4"					
1/2"					
3/8"					
#4	0.0	0.0	100.0		
#10	4.0	1.4	98.6		
#40	6.1	2.2	96.4		
#100	6.3	2.3	94.1		
#200	3.5	1.3	92.8	20-100	

REVIEWED BY:	Robert R. Rouse
DATE REVIEWED:	1/7/13

Remarks:

GRAIN SIZE DISTRIBUTION CURVE

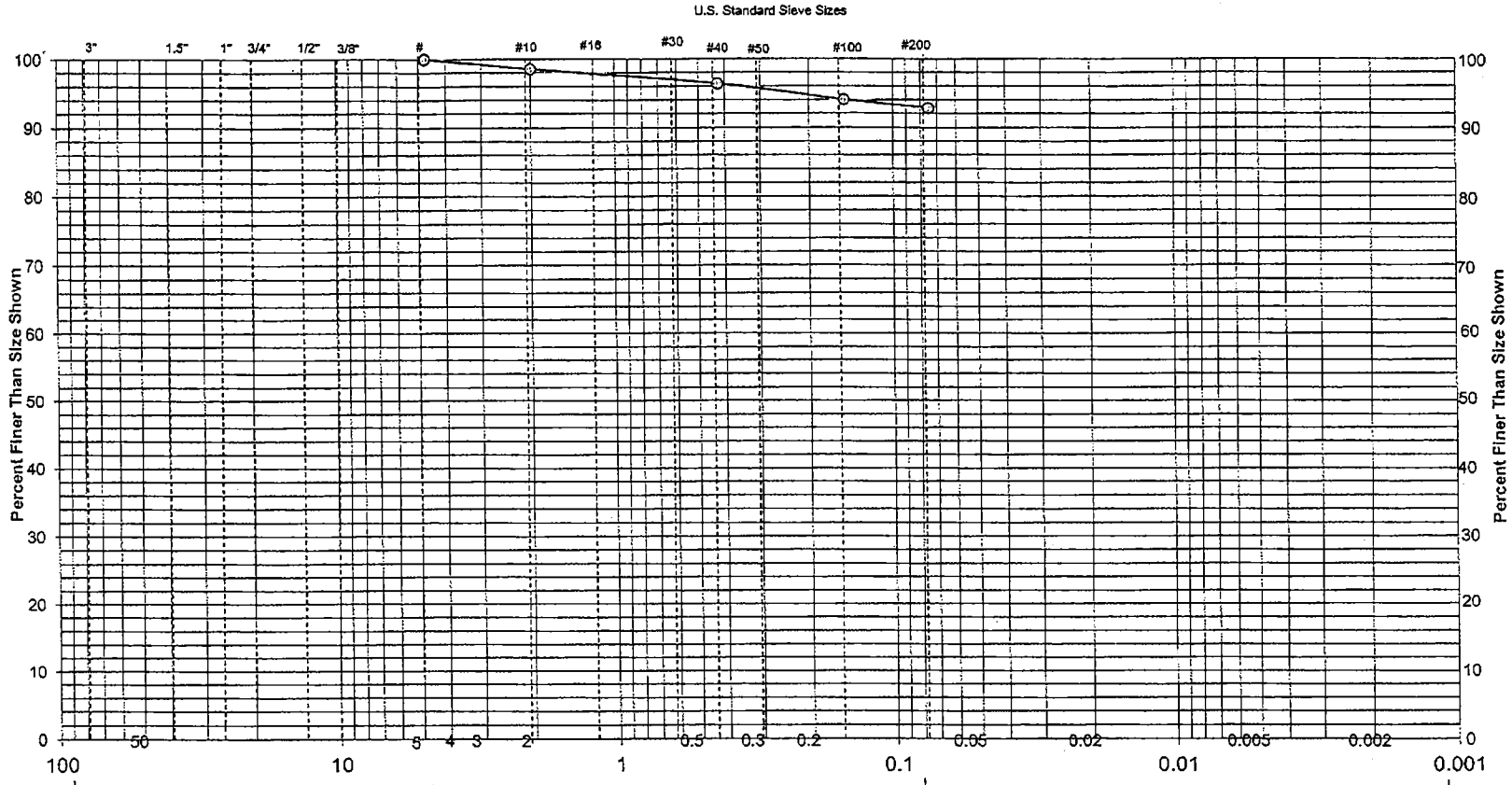

Gravel		Sand			
Coarse	Fine	Coarse	Medium	Fine	Silt - Clay
		1.4%	2.2%	3.6%	92.8%

Soil Classification: LEAN CLAY, yellowish brown (CL)			
Location Sampled: Borrow S-C	Elevation or Depth:	Date Sampled: 12/12/12	
Sample Number: RA-OH-S-C	Sampled Moisture Content (%): 28.8	Report No.: S-C	
Sample Source:	CQM, INC.		
Atterberg Limits: LL= 36.0 PL= 16.7 PI= 19.3	Client: Roach & Associates, LLC		
Munsell Color Code: 10YR 5/4	Project: Opitz Heifers	Page:	2
Date Received: 1/3/13	Prepared by: Michael R. Andraschko	Date:	1/7/13
Coefficients: Cc= Cu=	Checked by: Robert R. Rouse	Date:	1/7/13

CQM, INC.

SIEVE ANALYSIS OF COARSE TO FINE AGGREGATES (ASTM D1140)

GENERAL DATA:

Client:	Roach & Associates, LLC
Project:	Opitz Heifers
Location Sampled:	Borrow S-D
Sample No:	RA-OH-S-D
Depth of Sample:	
Date Received:	1/3/13
Sample Designated For:	Soil Classification
Source of Sample:	
Munsell Color Code:	10YR 5/2
Date Sampled:	12/12/12

LABORATORY DATA:

Date Tested:	January 4-7, 2013
Test Performed By:	JLN

24 Hrs. Turn Around:	NO
Washed Gradation:	YES

Dry Weight of Soil (gms): 282.6

Sieve Size	Weight Retained	% Retained	% Passing	Project Specification % Passing by Weight	Source of Specification
3"					Project Specification
1 1/2"					
1"					
3/4"					
1/2"					
3/8"	0.0	0.0	100.0		
#4	0.6	0.2	99.8		
#10	3.3	1.2	98.6		
#40	5.4	1.9	96.7		
#100	5.6	2.0	94.7		
#200	2.4	0.8	93.9	20-100	

REVIEWED BY:	Robert R Rover
DATE REVIEWED:	1/7/13

Remarks:

1/7/2013 TLS G-RAOHSD

GRAIN SIZE DISTRIBUTION CURVE

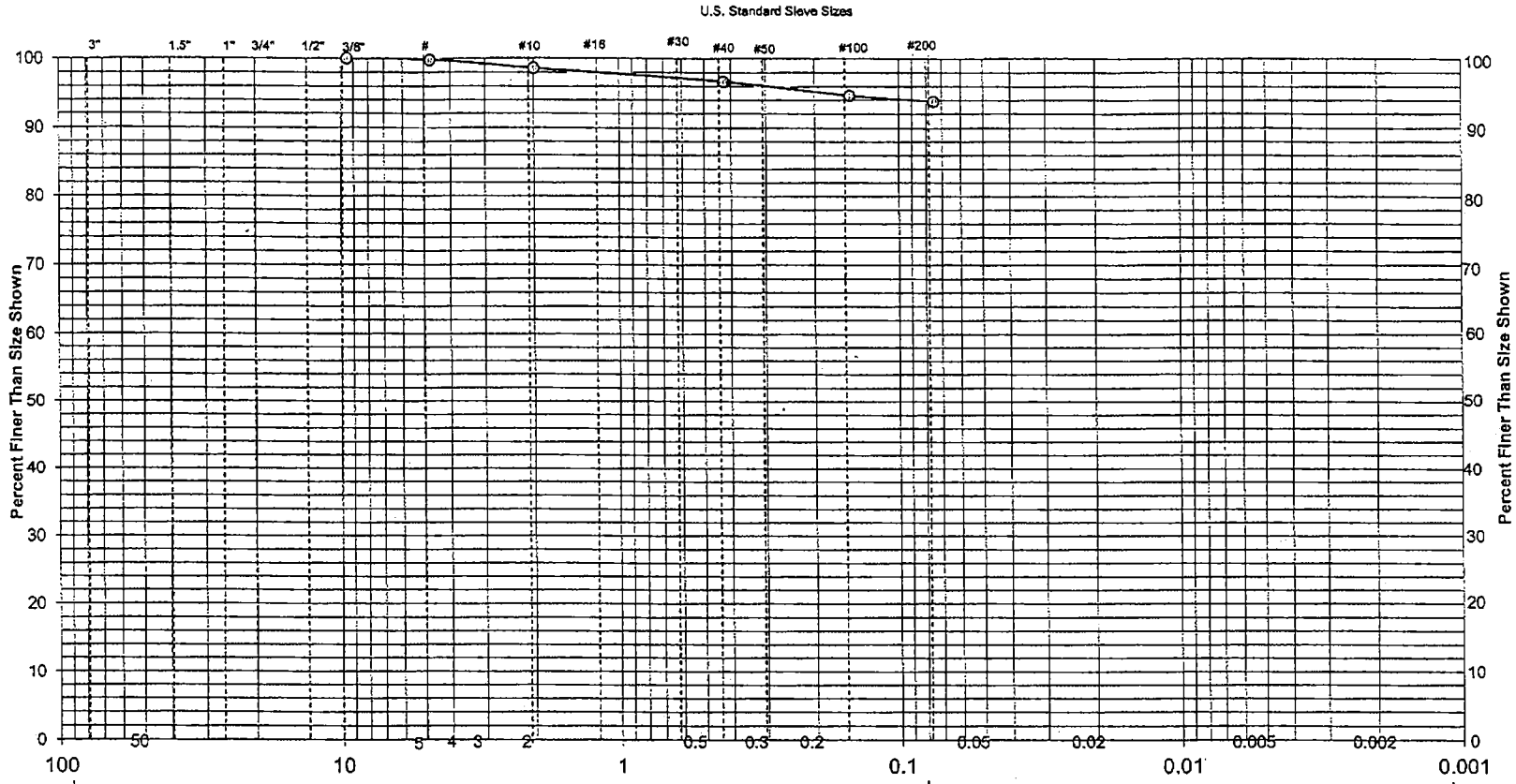

Gravel		Sand			
Coarse	Fine	Coarse	Medium	Fine	Silt - Clay
	0.2%	1.2%	1.9%	2.8%	93.9%

Soil Classification: LEAN CLAY, grayish brown (CL)			
Location Sampled: Borrow S-D	Elevation or Depth:	Date Sampled: 12/12/12	
Sample Number: RA-OH-S-D	Sampled Moisture Content (%): 28.3	Report No.: S-D	
Sample Source:	CQM, INC.		
Atterberg Limits: LL= 34.9 PL= 17.7 PI= 17.2	Client: Roach & Associates, LLC		
Munsell Color Code: 10YR 5/2	Project: Opitz Heifers	Page:	2
Date Received: 1/3/13	Prepared by: Michael R. Andraschko	Date:	1/7/13
Coefficients: Cc= Cu=	Checked by: Robert R. Rocco	Date:	1/7/13

Appendix C – Manure and Wastewater Generation and Storage Calculations

Wastewater daily average

270	days	
3400	cows	

Leachate	149,600	gal	554	gpd
Misters	5,926,500	gal	21,950	gpd
Parlor	7.65	gal/cow/day	26,010	gpd
Sand separation	0.5	gal/cow/day	1,700	gpd
			50,214	gpd

Solids Storage

Yearly generation	24,840	tons
	45	lb/cuft
	1,104,000	cuft
Storage area		
length	250	ft
width	150	ft
ave height	6	ft
Volume	225,000	cuft
Days Storage	74	days

Sand Storage

	Cows	cuft/cow/day		
Yearly generation	4300	0.45	706,275	cuft
Storage area				
length	250	ft		
width	150	ft		
ave height	6	ft		
Volume	225,000	cuft		
Days Storage	116	days		

WASTE STORAGE FACILITY DESIGN - 313 STANDARD

CLIENT: GSD COUNTY: Wood DATE: 1/27/14
DSN BY: CHK BY: _____ DATE: _____
COMMENTS:

ANIMAL TYPE> 1 (1=DAIRY, 2=BEEF, 3=VEAL, 4=SWINE(finishing), 5=SWINE(farrowing), 6=POULTRY, 0=OTHER)

For Dairy: Rolling Herd Average 28,000 lbs/cow/yr Is it a stanchion barn? n (Y or N)

MANURE AND WASTEWATER

LIVESTOCK		AVG. WT.	DAILY OUTPUT, CU FT			DAYS OF	VOLUME	ANIMAL
KIND	NUMBER	PER HEAD	MANURE	BEDDING	TOTAL	STORAGE	REQUIRED	UNITS
Cows	3400	1,400	2.52		8568.0	180	1,542,240	4,760
Dry	600	1,200	1.90		1140.0	180	205,200	720
Heifers	300	700	1.10		330.0	180	59,400	210
Calves								

WASTEWATER: 50214 GAL/DAY 6713.1 CU FT/DAY 5,690 TOT. A.U.

TOTAL DAILY VOLUME: 16751.1 CU FT / DAY

22,553,683 GALLONS

Total Manure and Wastewater **3,015,198** **CU FT**

Expected % solids in waste (Includes runoff and precip.) 5.8 %

RUNOFF VOLUME

MONTHLY RUNOFF

RCN 95 $\frac{12.2}{12}$ IN. X 570,848 Ft2 Drainage Area= 580,362 CU FT
(Do not include storage area)

25-Year, 24-HOUR RUNOFF

RCN 95 $\frac{4.02}{12}$ IN. X 570,848 Ft2 Drainage Area= 191,405 CU FT
(Do not include storage area)

28,326,500 GALLONS

Total for Manure, Milking Center, Runoff Volume, and 25 Yr Runoff **3,786,965** **CU FT**

CLIENT: GSD COUNTY: Wood DATE: 1/27/14
DSN BY: CHK BY: _____ DATE: _____
COMMENTS:

ANIMAL TYPE> 1 (1=DAIRY, 2=BEEF, 3=VEAL, 4=SWINE(finishing), 5=SWINE(farrowing), 6=POULTRY, 0=OTHER)

For Dairy: Rolling Herd Average 28,000 lbs/cow/yr Is it a stanchion barn? n (Y or N)

MANURE AND WASTEWATER

LIVESTOCK		AVG. WT.	DAILY OUTPUT, CU FT			DAYS OF	VOLUME	ANIMAL
KIND	NUMBER	PER HEAD	MANURE	BEDDING	TOTAL	STORAGE	REQUIRED	UNITS
Cows	3400	1,400	2.52		8568.0	270	2,313,360	4,760
Dry	600	1,200	1.90		1140.0	270	307,800	720
Heifers	300	700	1.10		330.0	270	89,100	210
Calves								

WASTEWATER: 50214 GAL/DAY 6713.1 CU FT/DAY 5,690 TOT. A.U.

TOTAL DAILY VOLUME: 16751.1 CU FT / DAY

33,830,525 GALLONS

Total Manure and Wastewater **4,522,797** **CU FT**

Expected % solids in waste (Includes runoff and precip.) 5.8 %

RUNOFF VOLUME

MONTHLY RUNOFF

RCN 95 $\frac{18.1}{12}$ IN. X 570,848 Ft2 Drainage Area= 861,029 CU FT
(Do not include storage area)

25-Year, 24-HOUR RUNOFF

RCN 95 $\frac{4.02}{12}$ IN. X 570,848 Ft2 Drainage Area= 191,405 CU FT
(Do not include storage area)

41,702,731 GALLONS

Total for Manure, Milking Center, Runoff Volume, and 25 Yr Runoff **5,575,231** **CU FT**

WASTE STORAGE FACILITY DESIGN - 313 STANDARD

CLIENT: GSD COUNTY: Wood DATE: 1/27/14
DSN BY: CHK BY: _____ DATE: _____
COMMENTS:

ANIMAL TYPE> 1 (1=DAIRY, 2=BEEF, 3=VEAL, 4=SWINE(finishing), 5=SWINE(farrowing), 6=POULTRY, 0=OTHER)

For Dairy: Rolling Herd Average 28,000 lbs/cow/yr Is it a stanchion barn? n (Y or N)

MANURE AND WASTEWATER

LIVESTOCK		AVG. WT.	DAILY OUTPUT, CU FT			DAYS OF	VOLUME	ANIMAL
KIND	NUMBER	PER HEAD	MANURE	BEDDING	TOTAL	STORAGE	REQUIRED	UNITS
Cows	3400	1,400	2.52		8568.0	365	3,127,320	4,760
Dry	600	1,200	1.90		1140.0	365	416,100	720
Heifers	300	700	1.10		330.0	365	120,450	210
Calves								

WASTEWATER: 50214 GAL/DAY 6713.1 CU FT/DAY 5,690 TOT. A.U.

TOTAL DAILY VOLUME: 16751.1 CU FT / DAY

45,733,858 GALLONS

Total Manure and Wastewater **6,114,152** **CU FT**

Expected % solids in waste (Includes runoff and precip.) 6.1 %

RUNOFF VOLUME

MONTHLY RUNOFF

RCN 95 $\frac{21.8}{12}$ IN. X 570,848 Ft2 Drainage Area= 1,037,041 CU FT
(Do not include storage area)

25-Year, 24-HOUR RUNOFF

RCN 95 $\frac{4.02}{12}$ IN. X 570,848 Ft2 Drainage Area= 191,405 CU FT
(Do not include storage area)

54,922,629 GALLONS

Total for Manure, Milking Center, Runoff Volume, and 25 Yr Runoff **7,342,597** **CU FT**

GoldenSands
Basin Description: WSF1 or WSF2

Elevation (ft)	Contour Area (sq ft)	Incremental Depth (ft)	Avg End Area Incremental Volume (cu ft)	Avg End Area Cummulative Volume (cu ft)	Cummulative Volume (gal)
989.0	28,458	N/A	N/A	-	-
989.1	28,658	0.1	2,856	2,856	21,363
989.2	28,858	0.1	2,876	5,732	42,876
989.3	29,059	0.1	2,896	8,628	64,538
989.4	29,260	0.1	2,916	11,543	86,351
989.5	29,462	0.1	2,936	14,480	108,315
989.6	29,664	0.1	2,956	17,436	130,430
989.7	29,867	0.1	2,977	20,412	152,696
989.8	30,071	0.1	2,997	23,409	175,114
989.9	30,274	0.1	3,017	26,427	197,685
990.0	30,479	0.1	3,038	29,464	220,408
990.1	30,684	0.1	3,058	32,522	243,285
990.2	30,889	0.1	3,079	35,601	266,315
990.3	31,095	0.1	3,099	38,700	289,498
990.4	31,302	0.1	3,120	41,820	312,836
990.5	31,509	0.1	3,141	44,961	336,329
990.6	31,717	0.1	3,161	48,122	359,977
990.7	31,925	0.1	3,182	51,304	383,781
990.8	32,133	0.1	3,203	54,507	407,740
990.9	32,342	0.1	3,224	57,731	431,856
991.0	32,552	0.1	3,245	60,975	456,128
991.1	32,762	0.1	3,266	64,241	480,557
991.2	32,973	0.1	3,287	67,528	505,144
991.3	33,185	0.1	3,308	70,836	529,889
991.4	33,396	0.1	3,329	74,165	554,792
991.5	33,609	0.1	3,350	77,515	579,854
991.6	33,822	0.1	3,372	80,887	605,074
991.7	34,035	0.1	3,393	84,280	630,454
991.8	34,249	0.1	3,414	87,694	655,994
991.9	34,464	0.1	3,436	91,129	681,695
992.0	34,679	0.1	3,457	94,586	707,556
992.1	34,894	0.1	3,479	98,065	733,578
992.2	35,110	0.1	3,500	101,565	759,761
992.3	35,327	0.1	3,522	105,087	786,106
992.4	35,544	0.1	3,544	108,631	812,614
992.5	35,762	0.1	3,565	112,196	839,284
992.6	35,980	0.1	3,587	115,783	866,117
992.7	36,198	0.1	3,609	119,392	893,113
992.8	36,418	0.1	3,631	123,023	920,274
992.9	36,638	0.1	3,653	126,675	947,598
993.0	36,858	0.1	3,675	130,350	975,088

993.1	37,079	0.1	3,697	134,047	1,002,742
993.2	37,300	0.1	3,719	137,766	1,030,561
993.3	37,522	0.1	3,741	141,507	1,058,547
993.4	37,744	0.1	3,763	145,270	1,086,698
993.5	37,967	0.1	3,786	149,056	1,115,016
993.6	38,191	0.1	3,808	152,864	1,143,501
993.7	38,415	0.1	3,830	156,694	1,172,154
993.8	38,639	0.1	3,853	160,547	1,200,974
993.9	38,864	0.1	3,875	164,422	1,229,963
994.0	39,090	0.1	3,898	168,320	1,259,120
994.1	39,316	0.1	3,920	172,240	1,288,446
994.2	39,543	0.1	3,943	176,183	1,317,941
994.3	39,770	0.1	3,966	180,149	1,347,606
994.4	39,998	0.1	3,988	184,137	1,377,441
994.5	40,226	0.1	4,011	188,148	1,407,447
994.6	40,455	0.1	4,034	192,182	1,437,624
994.7	40,684	0.1	4,057	196,239	1,467,972
994.8	40,914	0.1	4,080	200,319	1,498,492
994.9	41,144	0.1	4,103	204,422	1,529,184
995.0	41,375	0.1	4,126	208,548	1,560,048
995.1	41,607	0.1	4,149	212,697	1,591,086
995.2	41,839	0.1	4,172	216,869	1,622,297
995.3	42,071	0.1	4,195	221,065	1,653,681
995.4	42,304	0.1	4,219	225,284	1,685,240
995.5	42,538	0.1	4,242	229,526	1,716,973
995.6	42,772	0.1	4,265	233,791	1,748,881
995.7	43,006	0.1	4,289	238,080	1,780,964
995.8	43,242	0.1	4,312	242,393	1,813,223
995.9	43,477	0.1	4,336	246,729	1,845,658
996.0	43,713	0.1	4,360	251,088	1,878,270
996.1	43,950	0.1	4,383	255,471	1,911,058
996.2	44,187	0.1	4,407	259,878	1,944,024
996.3	44,425	0.1	4,431	264,309	1,977,168
996.4	44,664	0.1	4,454	268,763	2,010,489
996.5	44,902	0.1	4,478	273,242	2,043,989
996.6	45,142	0.1	4,502	277,744	2,077,668
996.7	45,382	0.1	4,526	282,270	2,111,526
996.8	45,622	0.1	4,550	286,820	2,145,564
996.9	45,863	0.1	4,574	291,394	2,179,782
997.0	46,105	0.1	4,598	295,993	2,214,180
997.1	46,347	0.1	4,623	300,615	2,248,760
997.2	46,589	0.1	4,647	305,262	2,283,520
997.3	46,832	0.1	4,671	309,933	2,318,462
997.4	47,076	0.1	4,695	314,629	2,353,586
997.5	47,320	0.1	4,720	319,349	2,388,893
997.6	47,565	0.1	4,744	324,093	2,424,382
997.7	47,810	0.1	4,769	328,861	2,460,055

997.8	48,056	0.1	4,793	333,655	2,495,911
997.9	48,302	0.1	4,818	338,473	2,531,952
998.0	48,549	0.1	4,843	343,315	2,568,176
998.1	48,796	0.1	4,867	348,182	2,604,586
998.2	49,044	0.1	4,892	353,074	2,641,180
998.3	49,292	0.1	4,917	357,991	2,677,961
998.4	49,541	0.1	4,942	362,933	2,714,927
998.5	49,791	0.1	4,967	367,900	2,752,080
998.6	50,041	0.1	4,992	372,891	2,789,419
998.7	50,291	0.1	5,017	377,908	2,826,946
998.8	50,542	0.1	5,042	382,949	2,864,660
998.9	50,794	0.1	5,067	388,016	2,902,563
999.0	51,046	0.1	5,092	393,108	2,940,653
999.1	51,299	0.1	5,117	398,225	2,978,933
999.2	51,552	0.1	5,143	403,368	3,017,401
999.3	51,805	0.1	5,168	408,536	3,056,060
999.4	52,060	0.1	5,193	413,729	3,094,908
999.5	52,314	0.1	5,219	418,948	3,133,946
999.6	52,570	0.1	5,244	424,192	3,173,176
999.7	52,825	0.1	5,270	429,462	3,212,596
999.8	53,082	0.1	5,295	434,757	3,252,208
999.9	53,339	0.1	5,321	440,078	3,292,012
1,000.0	53,596	0.1	5,347	445,425	3,332,008
1,000.1	53,854	0.1	5,372	450,797	3,372,197
1,000.2	54,112	0.1	5,398	456,196	3,412,580
1,000.3	54,371	0.1	5,424	461,620	3,453,155
1,000.4	54,631	0.1	5,450	467,070	3,493,925
1,000.5	54,891	0.1	5,476	472,546	3,534,889
1,000.6	55,151	0.1	5,502	478,048	3,576,047
1,000.7	55,413	0.1	5,528	483,576	3,617,401
1,000.8	55,674	0.1	5,554	489,131	3,658,950
1,000.9	55,936	0.1	5,581	494,711	3,700,696
1,001.0	56,199	0.1	5,607	500,318	3,742,637
1,001.1	56,462	0.1	5,633	505,951	3,784,775
1,001.2	56,726	0.1	5,659	511,610	3,827,111
1,001.3	56,990	0.1	5,686	517,296	3,869,644
1,001.4	57,255	0.1	5,712	523,008	3,912,374
1,001.5	57,520	0.1	5,739	528,747	3,955,303
1,001.6	57,786	0.1	5,765	534,512	3,998,431
1,001.7	58,053	0.1	5,792	540,304	4,041,758
1,001.8	58,320	0.1	5,819	546,123	4,085,284
1,001.9	58,587	0.1	5,845	551,968	4,129,010
1,002.0	58,855	0.1	5,872	557,840	4,172,936
1,002.1	59,123	0.1	5,899	563,739	4,217,063
1,002.2	59,393	0.1	5,926	569,665	4,261,391
1,002.3	59,662	0.1	5,953	575,618	4,305,921
1,002.4	59,932	0.1	5,980	581,598	4,350,652

1,002.5	60,203	0.1	6,007	587,604	4,395,586	
1,002.6	60,474	0.1	6,034	593,638	4,440,722	
1,002.7	60,746	0.1	6,061	599,699	4,486,061	
1,002.8	61,018	0.1	6,088	605,787	4,531,604	
1,002.9	61,291	0.1	6,115	611,903	4,577,351	
1,003.0	61,564	0.1	6,143	618,045	4,623,302	
1,003.1	61,838	0.1	6,170	624,216	4,669,457	
1,003.2	62,112	0.1	6,197	630,413	4,715,818	
1,003.3	62,387	0.1	6,225	636,638	4,762,383	
1,003.4	62,662	0.1	6,252	642,890	4,809,155	
1,003.5	62,938	0.1	6,280	649,171	4,856,133	
1,003.6	63,215	0.1	6,308	655,478	4,903,317	
1,003.7	63,492	0.1	6,335	661,813	4,950,709	
1,003.8	63,769	0.1	6,363	668,177	4,998,308	
1,003.9	64,047	0.1	6,391	674,567	5,046,115	
1,004.0	64,326	0.1	6,419	680,986	5,094,130	
1,004.1	64,605	0.1	6,447	687,433	5,142,353	
1,004.2	64,885	0.1	6,474	693,907	5,190,786	
1,004.3	65,165	0.1	6,502	700,410	5,239,427	
1,004.4	65,445	0.1	6,531	706,940	5,288,279	
1,004.5	65,727	0.1	6,559	713,499	5,337,341	
1,004.6	66,008	0.1	6,587	720,085	5,386,613	
1,004.7	66,291	0.1	6,615	726,700	5,436,097	
1,004.8	66,574	0.1	6,643	733,344	5,485,791	
1,004.9	66,857	0.1	6,672	740,015	5,535,698	
1,005.0	67,141	0.1	6,700	746,715	5,585,816	
1,005.1	67,425	0.1	6,728	753,443	5,636,148	
1,005.2	67,710	0.1	6,757	760,200	5,686,692	
1,005.3	67,996	0.1	6,785	766,985	5,737,449	
1,005.4	68,282	0.1	6,814	773,799	5,788,420	
1,005.5	68,568	0.1	6,842	780,642	5,839,606	
1,005.6	68,855	0.1	6,871	787,513	5,891,006	
1,005.7	69,143	0.1	6,900	794,413	5,942,620	
1,005.8	69,431	0.1	6,929	801,341	5,994,450	
1,005.9	69,719	0.1	6,958	808,299	6,046,496	
1,006.0	70,009	0.1	6,986	815,285	6,098,758	
1,006.1	70,298	0.1	7,015	822,301	6,151,237	
1,006.2	70,589	0.1	7,044	829,345	6,203,932	
1,006.3	70,879	0.1	7,073	836,418	6,256,845	
1,006.4	71,171	0.1	7,103	843,521	6,309,975	
1,006.5	71,462	0.1	7,132	850,653	6,363,324	
1,006.6	71,755	0.1	7,161	857,813	6,416,891	
1,006.7	72,048	0.1	7,190	865,004	6,470,677	
1,006.8	72,341	0.1	7,219	872,223	6,524,682	
1,006.9	72,635	0.1	7,249	879,472	6,578,906	
1,007.0	72,929	0.1	7,278	886,750	6,633,351	MOL
1,007.1	73,224	0.1	7,308	894,058	6,688,017	

1,007.2	73,520	0.1	7,337	901,395	6,742,903	
1,007.3	73,816	0.1	7,367	908,762	6,798,011	
1,007.4	74,113	0.1	7,396	916,158	6,853,340	
1,007.5	74,410	0.1	7,426	923,584	6,908,891	
1,007.6	74,707	0.1	7,456	931,040	6,964,665	Q25 Precip
1,007.7	75,006	0.1	7,486	938,526	7,020,661	
1,007.8	75,304	0.1	7,515	946,041	7,076,881	
1,007.9	75,604	0.1	7,545	953,587	7,133,325	
1,008.0	75,903	0.1	7,575	961,162	7,189,992	Freeboard
1,008.1	76,204	0.1	7,605	968,767	7,246,884	
1,008.2	76,504	0.1	7,635	976,403	7,304,001	
1,008.3	76,806	0.1	7,666	984,068	7,361,343	
1,008.4	77,108	0.1	7,696	991,764	7,418,910	
1,008.5	77,410	0.1	7,726	999,490	7,476,704	
1,008.6	77,713	0.1	7,756	1,007,246	7,534,724	
1,008.7	78,016	0.1	7,786	1,015,033	7,592,971	
1,008.8	78,320	0.1	7,817	1,022,849	7,651,445	
1,008.9	78,625	0.1	7,847	1,030,697	7,710,147	
1,009.0	79,272	0.1	7,895	1,038,591	7,769,204	

MOL =	Freeboard + Q25 Precip.	-	Q25 Runoff/2*	
	931,040		95,703	883,189

*Q25 Runoff divided by two to split between WSF1A and WSF1B

	(cu. ft)	(gallons)
Usable Volume=MOL-Waste Remaining=	886,750	6,633,351

GoldenSands
Basin Description: WSF3

Elevation (ft)	Contour Area (sq ft)	Incremental Depth (ft)	Avg End Area Incremental Volume (cu ft)	Avg End Area Cummulative Volume (cu ft)	Cummulative Volume (gal)
989.0	75,616	N/A	N/A	-	-
989.1	75,918	0.1	7,577	7,577	56,678
989.2	76,221	0.1	7,607	15,184	113,581
989.3	76,524	0.1	7,637	22,821	170,712
989.4	76,827	0.1	7,668	30,488	228,069
989.5	77,131	0.1	7,698	38,186	285,653
989.6	77,436	0.1	7,728	45,915	343,465
989.7	77,741	0.1	7,759	53,673	401,506
989.8	78,047	0.1	7,789	61,463	459,774
989.9	78,353	0.1	7,820	69,283	518,272
990.0	78,660	0.1	7,851	77,133	576,998
990.1	78,967	0.1	7,881	85,015	635,955
990.2	79,275	0.1	7,912	92,927	695,141
990.3	79,583	0.1	7,943	100,870	754,558
990.4	79,892	0.1	7,974	108,843	814,205
990.5	80,201	0.1	8,005	116,848	874,084
990.6	80,511	0.1	8,036	124,884	934,195
990.7	80,821	0.1	8,067	132,950	994,537
990.8	81,132	0.1	8,098	141,048	1,055,112
990.9	81,443	0.1	8,129	149,177	1,115,919
991.0	81,755	0.1	8,160	157,337	1,176,960
991.1	82,068	0.1	8,191	165,528	1,238,234
991.2	82,381	0.1	8,222	173,750	1,299,742
991.3	82,694	0.1	8,254	182,004	1,361,485
991.4	83,008	0.1	8,285	190,289	1,423,462
991.5	83,323	0.1	8,317	198,606	1,485,674
991.6	83,638	0.1	8,348	206,954	1,548,122
991.7	83,954	0.1	8,380	215,333	1,610,806
991.8	84,270	0.1	8,411	223,745	1,673,726
991.9	84,587	0.1	8,443	232,187	1,736,882
992.0	84,904	0.1	8,475	240,662	1,800,276
992.1	85,221	0.1	8,506	249,168	1,863,907
992.2	85,540	0.1	8,538	257,706	1,927,776
992.3	85,858	0.1	8,570	266,276	1,991,884
992.4	86,178	0.1	8,602	274,878	2,056,230
992.5	86,498	0.1	8,634	283,512	2,120,815
992.6	86,818	0.1	8,666	292,177	2,185,639
992.7	87,139	0.1	8,698	300,875	2,250,704
992.8	87,460	0.1	8,730	309,605	2,316,008
992.9	87,782	0.1	8,762	318,367	2,381,553
993.0	88,104	0.1	8,794	327,162	2,447,339

993.1	88,427	0.1	8,827	335,988	2,513,367
993.2	88,751	0.1	8,859	344,847	2,579,636
993.3	89,075	0.1	8,891	353,738	2,646,148
993.4	89,399	0.1	8,924	362,662	2,712,902
993.5	89,724	0.1	8,956	371,618	2,779,899
993.6	90,050	0.1	8,989	380,607	2,847,139
993.7	90,376	0.1	9,021	389,628	2,914,623
993.8	90,703	0.1	9,054	398,682	2,982,351
993.9	91,030	0.1	9,087	407,769	3,050,324
994.0	91,358	0.1	9,119	416,888	3,118,541
994.1	91,686	0.1	9,152	426,041	3,187,004
994.2	92,014	0.1	9,185	435,226	3,255,713
994.3	92,344	0.1	9,218	444,443	3,324,668
994.4	92,673	0.1	9,251	453,694	3,393,869
994.5	93,004	0.1	9,284	462,978	3,463,317
994.6	93,335	0.1	9,317	472,295	3,533,013
994.7	93,666	0.1	9,350	481,645	3,602,956
994.8	93,998	0.1	9,383	491,028	3,673,147
994.9	94,330	0.1	9,416	500,445	3,743,586
995.0	94,663	0.1	9,450	509,894	3,814,275
995.1	94,996	0.1	9,483	519,377	3,885,212
995.2	95,330	0.1	9,516	528,894	3,956,399
995.3	95,665	0.1	9,550	538,443	4,027,837
995.4	96,000	0.1	9,583	548,027	4,099,524
995.5	96,335	0.1	9,617	557,643	4,171,463
995.6	96,672	0.1	9,650	567,294	4,243,652
995.7	97,008	0.1	9,684	576,978	4,316,094
995.8	97,345	0.1	9,718	586,695	4,388,787
995.9	97,683	0.1	9,751	596,447	4,461,732
996.0	98,021	0.1	9,785	606,232	4,534,931
996.1	98,360	0.1	9,819	616,051	4,608,382
996.2	98,699	0.1	9,853	625,904	4,682,087
996.3	99,039	0.1	9,887	635,791	4,756,046
996.4	99,379	0.1	9,921	645,712	4,830,259
996.5	99,720	0.1	9,955	655,667	4,904,727
996.6	100,061	0.1	9,989	665,656	4,979,450
996.7	100,403	0.1	10,023	675,679	5,054,429
996.8	100,745	0.1	10,057	685,736	5,129,663
996.9	101,088	0.1	10,092	695,828	5,205,154
997.0	101,431	0.1	10,126	705,954	5,280,901
997.1	101,775	0.1	10,160	716,114	5,356,906
997.2	102,120	0.1	10,195	726,309	5,433,168
997.3	102,465	0.1	10,229	736,538	5,509,688
997.4	102,810	0.1	10,264	746,802	5,586,466
997.5	103,156	0.1	10,298	757,100	5,663,502
997.6	103,503	0.1	10,333	767,433	5,740,798
997.7	103,850	0.1	10,368	777,801	5,818,353

997.8	104,197	0.1	10,402	788,203	5,896,168
997.9	104,545	0.1	10,437	798,640	5,974,243
998.0	104,894	0.1	10,472	809,112	6,052,579
998.1	105,243	0.1	10,507	819,619	6,131,176
998.2	105,593	0.1	10,542	830,161	6,210,034
998.3	105,943	0.1	10,577	840,738	6,289,154
998.4	106,294	0.1	10,612	851,349	6,368,536
998.5	106,645	0.1	10,647	861,996	6,448,180
998.6	106,997	0.1	10,682	872,678	6,528,088
998.7	107,349	0.1	10,717	883,396	6,608,259
998.8	107,702	0.1	10,753	894,148	6,688,693
998.9	108,055	0.1	10,788	904,936	6,769,392
999.0	108,409	0.1	10,823	915,759	6,850,355
999.1	108,763	0.1	10,859	926,618	6,931,584
999.2	109,118	0.1	10,894	937,512	7,013,077
999.3	109,474	0.1	10,930	948,442	7,094,836
999.4	109,830	0.1	10,965	959,407	7,176,861
999.5	110,186	0.1	11,001	970,408	7,259,153
999.6	110,543	0.1	11,036	981,444	7,341,712
999.7	110,901	0.1	11,072	992,516	7,424,538
999.8	111,259	0.1	11,108	1,003,624	7,507,631
999.9	111,617	0.1	11,144	1,014,768	7,590,993
1,000.0	111,977	0.1	11,180	1,025,948	7,674,623
1,000.1	112,336	0.1	11,216	1,037,163	7,758,521
1,000.2	112,696	0.1	11,252	1,048,415	7,842,690
1,000.3	113,057	0.1	11,288	1,059,703	7,927,127
1,000.4	113,418	0.1	11,324	1,071,026	8,011,835
1,000.5	113,780	0.1	11,360	1,082,386	8,096,813
1,000.6	114,142	0.1	11,396	1,093,782	8,182,062
1,000.7	114,505	0.1	11,432	1,105,215	8,267,582
1,000.8	114,868	0.1	11,469	1,116,684	8,353,373
1,000.9	115,232	0.1	11,505	1,128,189	8,439,437
1,001.0	115,596	0.1	11,541	1,139,730	8,525,773
1,001.1	115,961	0.1	11,578	1,151,308	8,612,381
1,001.2	116,327	0.1	11,614	1,162,922	8,699,263
1,001.3	116,693	0.1	11,651	1,174,573	8,786,419
1,001.4	117,059	0.1	11,688	1,186,261	8,873,848
1,001.5	117,426	0.1	11,724	1,197,985	8,961,551
1,001.6	117,794	0.1	11,761	1,209,746	9,049,530
1,001.7	118,162	0.1	11,798	1,221,544	9,137,783
1,001.8	118,530	0.1	11,835	1,233,378	9,226,312
1,001.9	118,899	0.1	11,871	1,245,250	9,315,117
1,002.0	119,269	0.1	11,908	1,257,158	9,404,198
1,002.1	119,639	0.1	11,945	1,269,104	9,493,555
1,002.2	120,010	0.1	11,982	1,281,086	9,583,190
1,002.3	120,381	0.1	12,020	1,293,106	9,673,102
1,002.4	120,752	0.1	12,057	1,305,162	9,763,292

1,002.5	121,125	0.1	12,094	1,317,256	9,853,761	
1,002.6	121,497	0.1	12,131	1,329,387	9,944,507	
1,002.7	121,871	0.1	12,168	1,341,556	10,035,533	
1,002.8	122,244	0.1	12,206	1,353,761	10,126,839	
1,002.9	122,619	0.1	12,243	1,366,004	10,218,424	
1,003.0	122,994	0.1	12,281	1,378,285	10,310,289	
1,003.1	123,369	0.1	12,318	1,390,603	10,402,435	
1,003.2	123,745	0.1	12,356	1,402,959	10,494,862	
1,003.3	124,121	0.1	12,393	1,415,352	10,587,570	
1,003.4	124,498	0.1	12,431	1,427,783	10,680,560	
1,003.5	124,876	0.1	12,469	1,440,252	10,773,833	
1,003.6	125,253	0.1	12,506	1,452,758	10,867,387	
1,003.7	125,632	0.1	12,544	1,465,303	10,961,225	
1,003.8	126,011	0.1	12,582	1,477,885	11,055,346	
1,003.9	126,391	0.1	12,620	1,490,505	11,149,751	
1,004.0	126,771	0.1	12,658	1,503,163	11,244,440	
1,004.1	127,151	0.1	12,696	1,515,859	11,339,413	
1,004.2	127,532	0.1	12,734	1,528,593	11,434,671	
1,004.3	127,914	0.1	12,772	1,541,365	11,530,215	
1,004.4	128,296	0.1	12,811	1,554,176	11,626,044	
1,004.5	128,679	0.1	12,849	1,567,025	11,722,159	
1,004.6	129,062	0.1	12,887	1,579,912	11,818,561	180 day marker
1,004.7	129,446	0.1	12,925	1,592,837	11,915,250	
1,004.8	129,830	0.1	12,964	1,605,801	12,012,226	
1,004.9	130,215	0.1	13,002	1,618,803	12,109,489	
1,005.0	130,600	0.1	13,041	1,631,844	12,207,041	
1,005.1	130,986	0.1	13,079	1,644,923	12,304,881	
1,005.2	131,372	0.1	13,118	1,658,041	12,403,009	
1,005.3	131,759	0.1	13,157	1,671,198	12,501,427	
1,005.4	132,147	0.1	13,195	1,684,393	12,600,135	
1,005.5	132,535	0.1	13,234	1,697,627	12,699,133	
1,005.6	132,923	0.1	13,273	1,710,900	12,798,421	
1,005.7	133,312	0.1	13,312	1,724,212	12,897,999	
1,005.8	133,701	0.1	13,351	1,737,562	12,997,869	
1,005.9	134,091	0.1	13,390	1,750,952	13,098,031	
1,006.0	134,482	0.1	13,429	1,764,381	13,198,484	
1,006.1	134,873	0.1	13,468	1,777,848	13,299,230	
1,006.2	135,265	0.1	13,507	1,791,355	13,400,269	
1,006.3	135,657	0.1	13,546	1,804,901	13,501,600	
1,006.4	136,049	0.1	13,585	1,818,487	13,603,226	
1,006.5	136,443	0.1	13,625	1,832,111	13,705,145	
1,006.6	136,836	0.1	13,664	1,845,775	13,807,358	
1,006.7	137,231	0.1	13,703	1,859,479	13,909,866	
1,006.8	137,625	0.1	13,743	1,873,221	14,012,670	
1,006.9	138,021	0.1	13,782	1,887,004	14,115,768	
1,007.0	138,416	0.1	13,822	1,900,825	14,219,163	
1,007.1	138,813	0.1	13,861	1,914,687	14,322,854	

1,007.2	139,209	0.1	13,901	1,928,588	14,426,841
1,007.3	139,607	0.1	13,941	1,942,529	14,531,126
1,007.4	140,005	0.1	13,981	1,956,509	14,635,708
1,007.5	140,403	0.1	14,020	1,970,530	14,740,588
1,007.6	140,802	0.1	14,060	1,984,590	14,845,766
1,007.7	141,202	0.1	14,100	1,998,690	14,951,242
1,007.8	141,602	0.1	14,140	2,012,830	15,057,018
1,007.9	142,002	0.1	14,180	2,027,011	15,163,093
1,008.0	142,403	0.1	14,220	2,041,231	15,269,468
1,008.1	142,805	0.1	14,260	2,055,491	15,376,143
1,008.2	143,207	0.1	14,301	2,069,792	15,483,119
1,008.3	143,609	0.1	14,341	2,084,133	15,590,395
1,008.4	144,012	0.1	14,381	2,098,514	15,697,973
1,008.5	144,416	0.1	14,421	2,112,935	15,805,853
1,008.6	144,820	0.1	14,462	2,127,397	15,914,035
1,008.7	145,225	0.1	14,502	2,141,899	16,022,519
1,008.8	145,630	0.1	14,543	2,156,442	16,131,307
1,008.9	146,036	0.1	14,583	2,171,025	16,240,397
1,009.0	146,442	0.1	14,624	2,185,649	16,349,792
1,009.1	146,849	0.1	14,665	2,200,314	16,459,490
1,009.2	147,256	0.1	14,705	2,215,019	16,569,493
1,009.3	147,664	0.1	14,746	2,229,765	16,679,801
1,009.4	148,072	0.1	14,787	2,244,552	16,790,414
1,009.5	148,481	0.1	14,828	2,259,379	16,901,333
1,009.6	148,891	0.1	14,869	2,274,248	17,012,558
1,009.7	149,301	0.1	14,910	2,289,158	17,124,089
1,009.8	149,711	0.1	14,951	2,304,108	17,235,928
1,009.9	150,122	0.1	14,992	2,319,100	17,348,073
1,010.0	150,534	0.1	15,033	2,334,133	17,460,526
1,010.1	150,946	0.1	15,074	2,349,207	17,573,287
1,010.2	151,358	0.1	15,115	2,364,322	17,686,357
1,010.3	151,771	0.1	15,156	2,379,478	17,799,735
1,010.4	152,185	0.1	15,198	2,394,676	17,913,423
1,010.5	152,599	0.1	15,239	2,409,915	18,027,420
1,010.6	153,014	0.1	15,281	2,425,196	18,141,727
1,010.7	153,429	0.1	15,322	2,440,518	18,256,345
1,010.8	153,845	0.1	15,364	2,455,882	18,371,273
1,010.9	154,261	0.1	15,405	2,471,287	18,486,512
1,011.0	154,678	0.1	15,447	2,486,734	18,602,063
1,011.1	155,095	0.1	15,489	2,502,223	18,717,926
1,011.2	155,513	0.1	15,530	2,517,753	18,834,101
1,011.3	155,931	0.1	15,572	2,533,325	18,950,590
1,011.4	156,350	0.1	15,614	2,548,939	19,067,391
1,011.5	156,769	0.1	15,656	2,564,595	19,184,505
1,011.6	157,189	0.1	15,698	2,580,293	19,301,934
1,011.7	157,609	0.1	15,740	2,596,033	19,419,677
1,011.8	158,030	0.1	15,782	2,611,815	19,537,734

1,011.9	158,452	0.1	15,824	2,627,639	19,656,107
1,012.0	158,874	0.1	15,866	2,643,505	19,774,795
1,012.1	159,296	0.1	15,909	2,659,414	19,893,799
1,012.2	159,719	0.1	15,951	2,675,365	20,013,119
1,012.3	160,143	0.1	15,993	2,691,358	20,132,756
1,012.4	160,567	0.1	16,036	2,707,393	20,252,710
1,012.5	160,992	0.1	16,078	2,723,471	20,372,981
1,012.6	161,417	0.1	16,120	2,739,592	20,493,570
1,012.7	161,842	0.1	16,163	2,755,755	20,614,478
1,012.8	162,269	0.1	16,206	2,771,960	20,735,704
1,012.9	162,695	0.1	16,248	2,788,208	20,857,249
1,013.0	163,123	0.1	16,291	2,804,499	20,979,113
1,013.1	163,550	0.1	16,334	2,820,833	21,101,297
1,013.2	163,979	0.1	16,376	2,837,209	21,223,802
1,013.3	164,407	0.1	16,419	2,853,629	21,346,627
1,013.4	164,837	0.1	16,462	2,870,091	21,469,773
1,013.5	165,267	0.1	16,505	2,886,596	21,593,240
1,013.6	165,697	0.1	16,548	2,903,144	21,717,029
1,013.7	166,128	0.1	16,591	2,919,736	21,841,140
1,013.8	166,559	0.1	16,634	2,936,370	21,965,574
1,013.9	166,991	0.1	16,678	2,953,047	22,090,330
1,014.0	167,424	0.1	16,721	2,969,768	22,215,410
1,014.1	167,857	0.1	16,764	2,986,532	22,340,814
1,014.2	168,290	0.1	16,807	3,003,340	22,466,541
1,014.3	168,724	0.1	16,851	3,020,190	22,592,593
1,014.4	169,159	0.1	16,894	3,037,084	22,718,971
1,014.5	169,594	0.1	16,938	3,054,022	22,845,673
1,014.6	170,030	0.1	16,981	3,071,003	22,972,701
1,014.7	170,466	0.1	17,025	3,088,028	23,100,055
1,014.8	170,902	0.1	17,068	3,105,096	23,227,735
1,014.9	171,340	0.1	17,112	3,122,208	23,355,743
1,015.0	171,777	0.1	17,156	3,139,364	23,484,077
1,015.1	172,215	0.1	17,200	3,156,564	23,612,740
1,015.2	172,654	0.1	17,243	3,173,807	23,741,730
1,015.3	173,094	0.1	17,287	3,191,095	23,871,048
1,015.4	173,533	0.1	17,331	3,208,426	24,000,696
1,015.5	173,974	0.1	17,375	3,225,801	24,130,672
1,015.6	174,414	0.1	17,419	3,243,221	24,260,979
1,015.7	174,856	0.1	17,464	3,260,684	24,391,615
1,015.8	175,298	0.1	17,508	3,278,192	24,522,581
1,015.9	175,740	0.1	17,552	3,295,744	24,653,879
1,016.0	176,183	0.1	17,596	3,313,340	24,785,507
1,016.1	176,627	0.1	17,640	3,330,981	24,917,467
1,016.2	177,071	0.1	17,685	3,348,666	25,049,759
1,016.3	177,515	0.1	17,729	3,366,395	25,182,383
1,016.4	177,960	0.1	17,774	3,384,169	25,315,341
1,016.5	178,406	0.1	17,818	3,401,987	25,448,631

1,016.6	178,852	0.1	17,863	3,419,850	25,582,254	
1,016.7	179,298	0.1	17,908	3,437,757	25,716,212	
1,016.8	179,746	0.1	17,952	3,455,709	25,850,504	
1,016.9	180,193	0.1	17,997	3,473,706	25,985,130	
1,017.0	180,641	0.1	18,042	3,491,748	26,120,092	
1,017.1	181,090	0.1	18,087	3,509,835	26,255,389	
1,017.2	181,539	0.1	18,131	3,527,966	26,391,022	
1,017.3	181,989	0.1	18,176	3,546,143	26,526,991	
1,017.4	182,439	0.1	18,221	3,564,364	26,663,296	
1,017.5	182,890	0.1	18,266	3,582,631	26,799,939	
1,017.6	183,342	0.1	18,312	3,600,942	26,936,920	MOL
1,017.7	183,793	0.1	18,357	3,619,299	27,074,238	
1,017.8	184,246	0.1	18,402	3,637,701	27,211,894	
1,017.9	184,699	0.1	18,447	3,656,148	27,349,889	
1,018.0	185,152	0.1	18,493	3,674,641	27,488,223	
1,018.1	185,606	0.1	18,538	3,693,179	27,626,896	
1,018.2	186,061	0.1	18,583	3,711,762	27,765,909	
1,018.3	186,516	0.1	18,629	3,730,391	27,905,262	
1,018.4	186,971	0.1	18,674	3,749,065	28,044,956	
1,018.5	187,427	0.1	18,720	3,767,785	28,184,990	
1,018.6	187,884	0.1	18,766	3,786,550	28,325,367	
1,018.7	188,341	0.1	18,811	3,805,362	28,466,084	
1,018.8	188,798	0.1	18,857	3,824,219	28,607,144	
1,018.9	189,257	0.1	18,903	3,843,121	28,748,547	
1,019.0	190,399	0.1	18,983	3,862,104	28,890,548	

Storage Summary

WSF 1	886,750	cuft	6,633,351	gal
WSF 2	886,750	cuft	6,633,351	gal
WSF 3	3,600,942	cuft	26,936,920	gal
Total	5,374,442	cuft	40,203,622	gal

Days of Storge Calculation

270 day production manure and wastewater (1)	4,522,797	cuft	33,830,522	gal
270 day production monthly runoff (1)	861,029	cuft	6,440,497	gal
Total	5,383,826	cuft	40,271,018	gal
daily average production	19,940	cuft	149,152	gal
useable volume (2)	5,374,442	cuft	40,203,622	gal
days of storage	270	days		

180 Marker Calculation

180 day production(1)	3,786,965	cuft	28,326,498	gal
WSF1	886,750	cuft	6,632,890	gal
WSF2	886,750	cuft	6,632,890	gal
Total	1,773,500	cuft	13,265,781	gal
180 day waste remaining for WSF3	2,013,465	cuft	15,060,718	gal
WSF3 useable volume	3,600,942	cuft	26,936,920	gal
180 day marker at 1004.6	1,587,477	cuft	11,874,329	gal

(1) based on NRCS Waste Storage spreadsheet
(2) based on CAD volumes

Appendix D – Stormwater Design Calculations

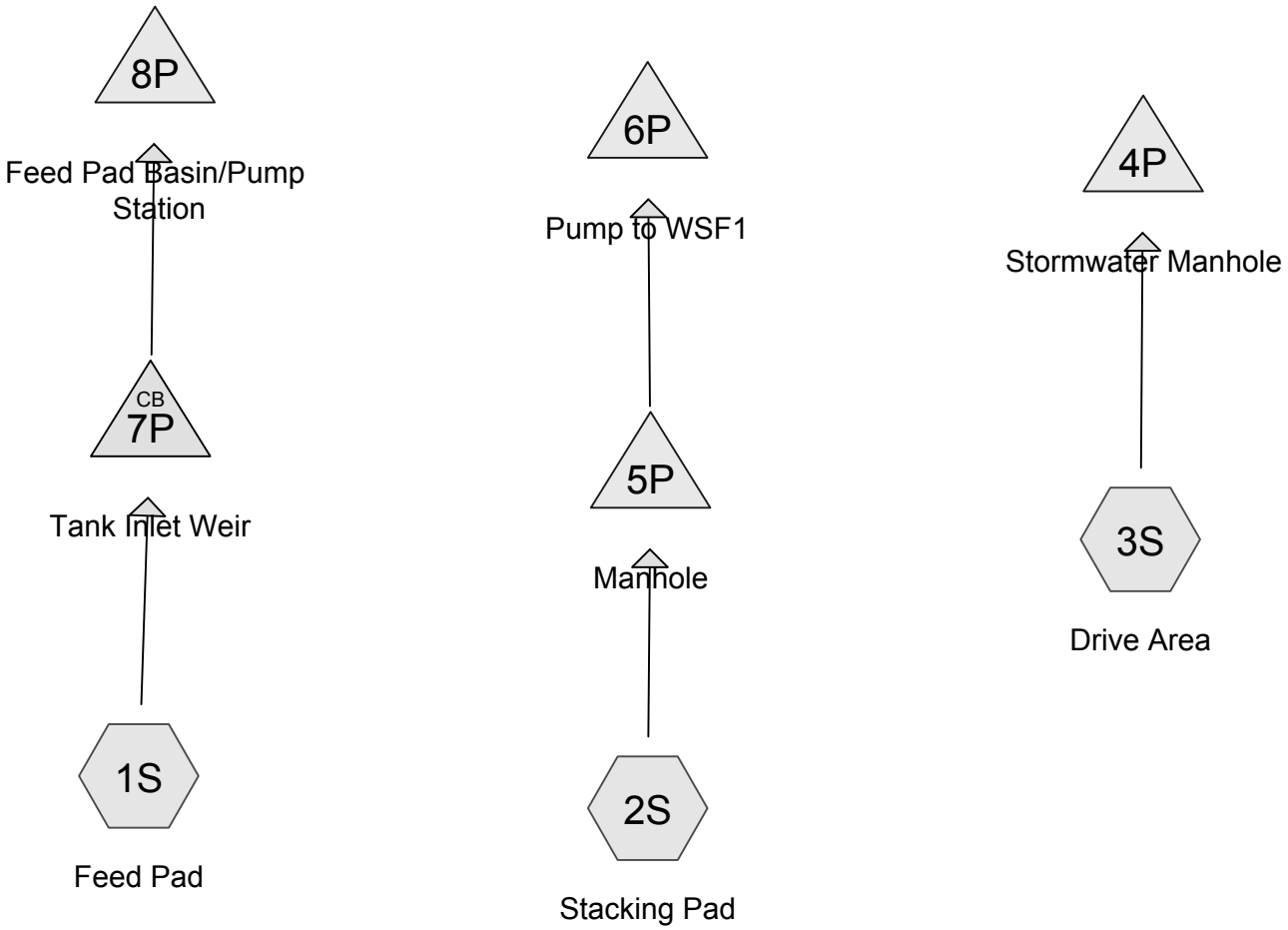

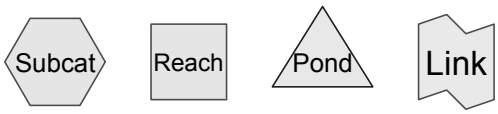

Routing Diagram for Runoff-Pump Calculations
Prepared by Microsoft, Printed 1/25/2014
HydroCAD® 10.00 s/n 02508 © 2013 HydroCAD Software Solutions LLC

Summary for Subcatchment 1S: Feed Pad

Runoff = 59.33 cfs @ 11.99 hrs, Volume= 3.527 af, Depth= 4.36"

Runoff by SCS TR-20 method, UH=SCS, Weighted-CN, Time Span= 0.00-30.00 hrs, dt= 0.01 hrs
Type II 24-hr 25-Year Rainfall=4.60"

Area (sf)	CN	Description
422,500	98	Paved parking, HSG A
422,500		100.00% Impervious Area

Tc (min)	Length (feet)	Slope (ft/ft)	Velocity (ft/sec)	Capacity (cfs)	Description
3.4	300	0.0150	1.45		**Sheet Flow,** Smooth surfaces n= 0.011 P2= 2.90"
0.5	75	0.0150	2.49		**Shallow Concentrated Flow,** Paved Kv= 20.3 fps
4.2	455	0.0080	1.82		**Shallow Concentrated Flow,** Paved Kv= 20.3 fps
8.1	830	Total			

Subcatchment 1S: Feed Pad

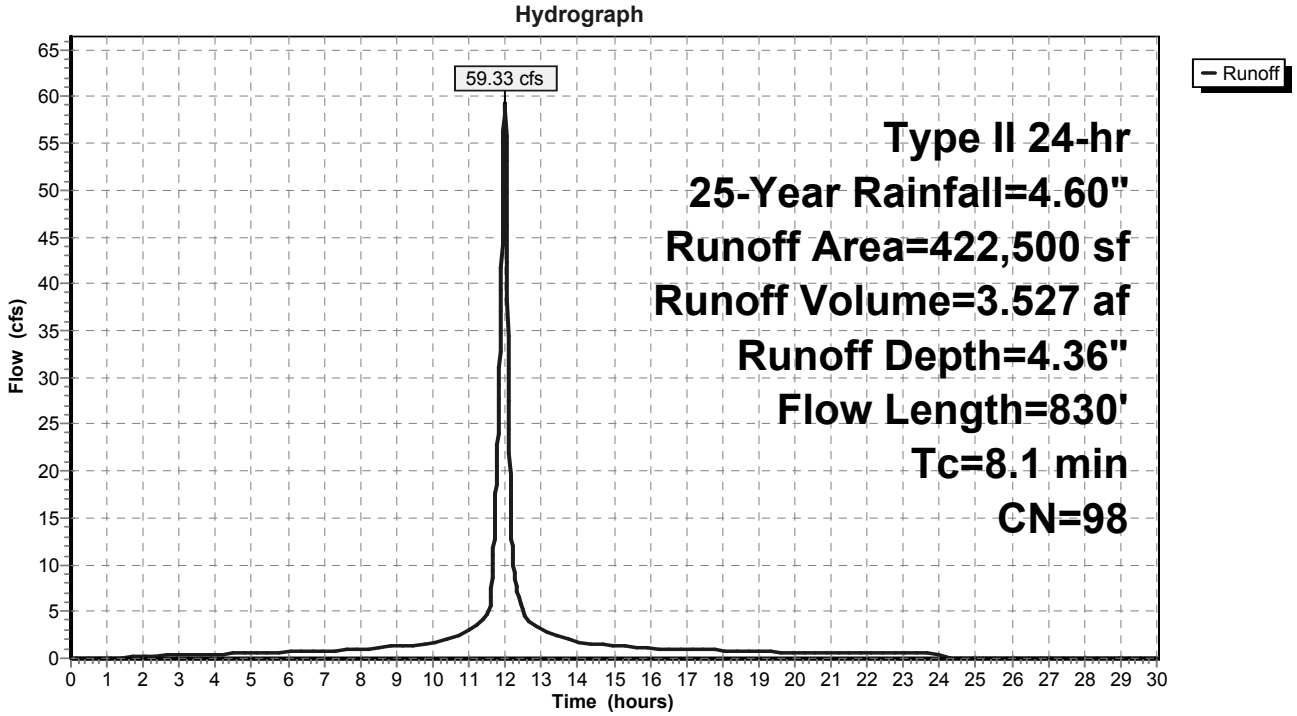

Summary for Subcatchment 2S: Stacking Pad

Runoff = 19.25 cfs @ 11.94 hrs, Volume= 1.002 af, Depth= 4.36"

Runoff by SCS TR-20 method, UH=SCS, Weighted-CN, Time Span= 0.00-30.00 hrs, dt= 0.01 hrs
Type II 24-hr 25-Year Rainfall=4.60"

Area (sf)	CN	Description
120,000	98	Paved parking, HSG A
120,000		100.00% Impervious Area

Tc (min)	Length (feet)	Slope (ft/ft)	Velocity (ft/sec)	Capacity (cfs)	Description
3.5	300	0.0140	1.41		**Sheet Flow,** Smooth surfaces n= 0.011 P2= 2.90"
0.4	50	0.0090	1.93		**Shallow Concentrated Flow,** Paved Kv= 20.3 fps
3.9	350	Total			

Subcatchment 2S: Stacking Pad

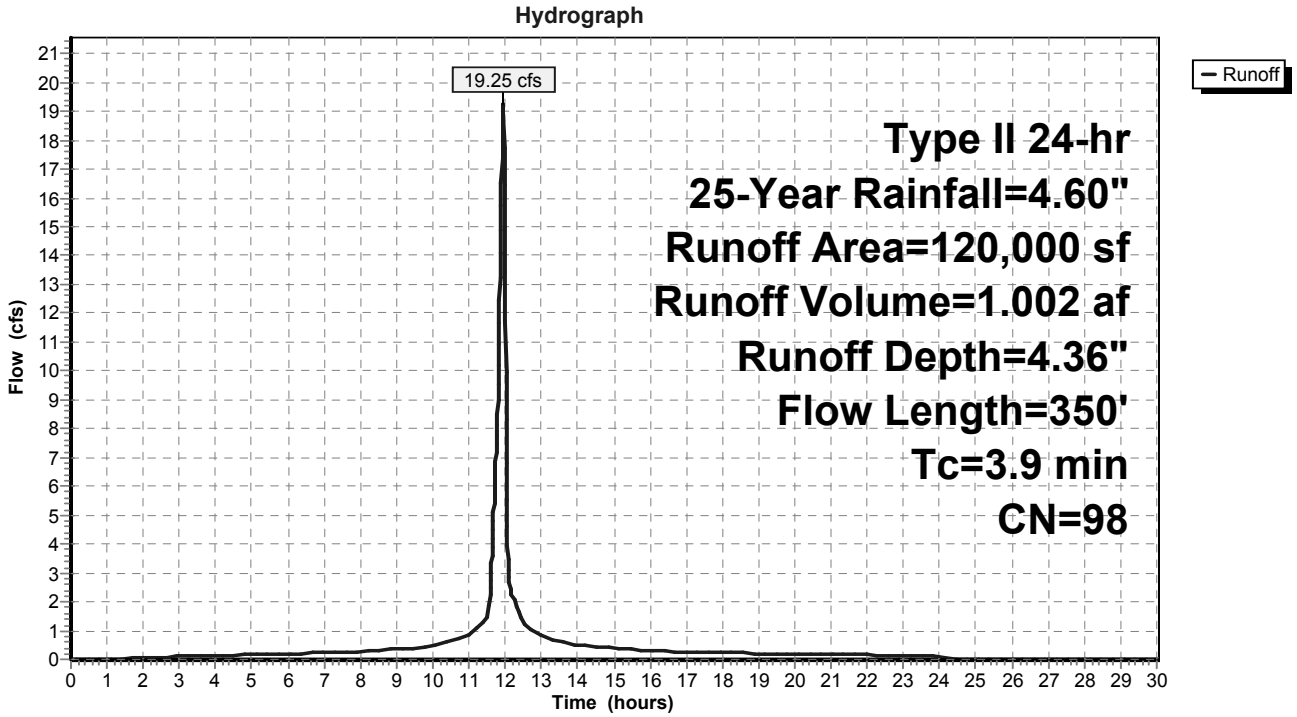

Summary for Subcatchment 3S: Drive Area

Runoff = 15.53 cfs @ 11.92 hrs, Volume= 0.768 af, Depth= 4.36"

Runoff by SCS TR-20 method, UH=SCS, Weighted-CN, Time Span= 0.00-30.00 hrs, dt= 0.01 hrs
Type II 24-hr 25-Year Rainfall=4.60"

Area (sf)	CN	Description
92,020	98	Paved parking, HSG A
92,020		100.00% Impervious Area

Tc (min)	Length (feet)	Slope (ft/ft)	Velocity (ft/sec)	Capacity (cfs)	Description
0.2	40	0.4200	3.68		**Sheet Flow,** Smooth surfaces n= 0.011 P2= 2.90"
0.2	20	0.0500	1.37		**Sheet Flow,** Smooth surfaces n= 0.011 P2= 2.90"
1.8	240	0.0125	2.27		**Shallow Concentrated Flow,** Paved Kv= 20.3 fps
2.2	300	Total			

Subcatchment 3S: Drive Area

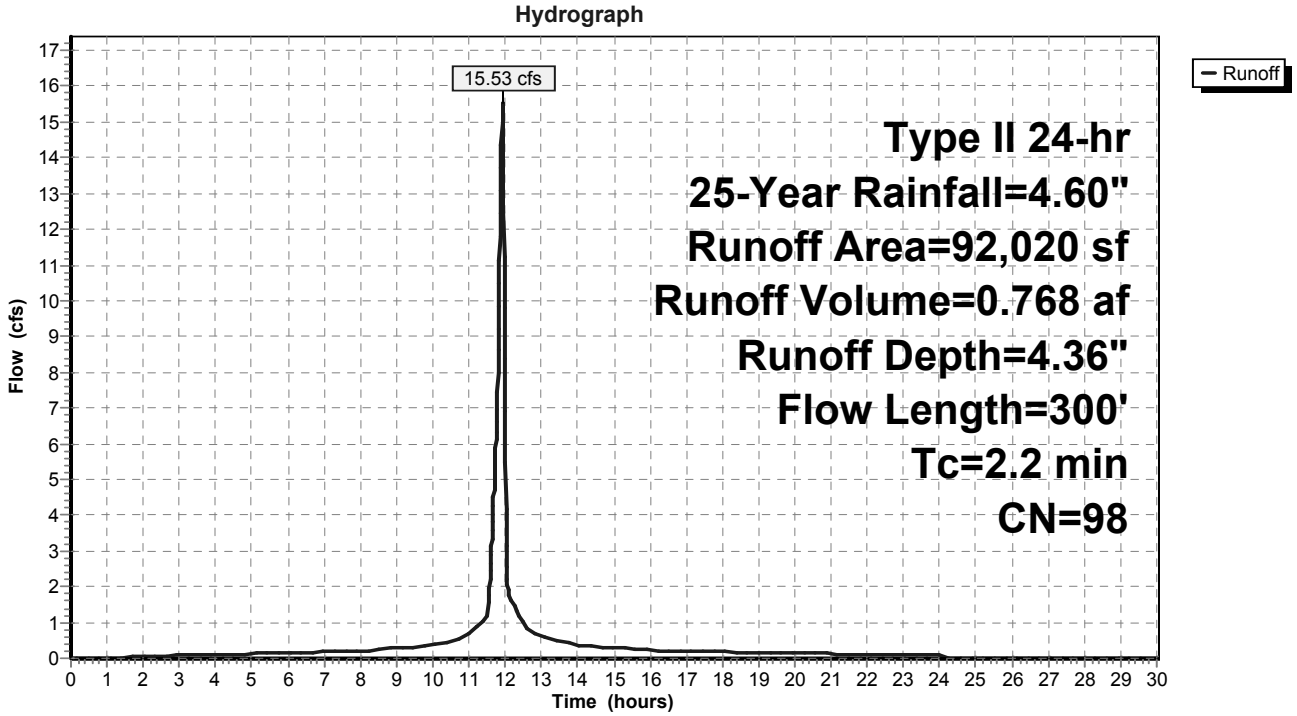

Summary for Pond 4P: Stormwater Manhole

Inflow Area = 2.112 ac,100.00% Impervious, Inflow Depth = 4.36" for 25-Year event
Inflow = 15.53 cfs @ 11.92 hrs, Volume= 0.768 af
Outflow = 9.46 cfs @ 11.98 hrs, Volume= 0.768 af, Atten= 39%, Lag= 3.5 min
Primary = 9.46 cfs @ 11.98 hrs, Volume= 0.768 af

Routing by Dyn-Stor-Ind method, Time Span= 0.00-30.00 hrs, dt= 0.01 hrs / 3
Peak Elev= 1,002.99' @ 11.98 hrs Surf.Area= 6,323 sf Storage= 3,439 cf

Plug-Flow detention time= 1.6 min calculated for 0.768 af (100% of inflow)
Center-of-Mass det. time= 1.6 min (743.5 - 741.8)

Volume	Invert	Avail.Storage	Storage Description
#1	1,001.90'	17,973 cf	**Custom Stage Data (Prismatic)** Listed below (Recalc)

Elevation (feet)	Surf.Area (sq-ft)	Inc.Store (cubic-feet)	Cum.Store (cubic-feet)
1,001.90	5	0	0
1,003.00	6,400	3,523	3,523
1,004.00	22,500	14,450	17,973

Device	Routing	Invert	Outlet Devices
#1	Primary	999.50'	**18.0" Round Culvert** L= 190.0' CMP, projecting, no headwall, Ke= 0.900 Inlet / Outlet Invert= 999.50' / 999.00' S= 0.0026 '/' Cc= 0.900 n= 0.013 Corrugated PE, smooth interior, Flow Area= 1.77 sf
#2	Device 1	1,001.90'	**NF Grate R-2588-C** Head (feet) 0.00 0.10 0.20 0.30 0.40 0.50 0.60 0.70 0.80 0.90 1.00 1.50 2.00 Disch. (cfs) 0.000 0.800 2.200 3.600 4.800 6.500 7.100 7.700 8.200 8.700 9.100 11.200 12.900

Primary OutFlow Max=9.46 cfs @ 11.98 hrs HW=1,002.99' (Free Discharge)
└─**1=Culvert** (Passes 9.46 cfs of 9.64 cfs potential flow)
└─**2=NF Grate R-2588-C** (Custom Controls 9.46 cfs)

Pond 4P: Stormwater Manhole

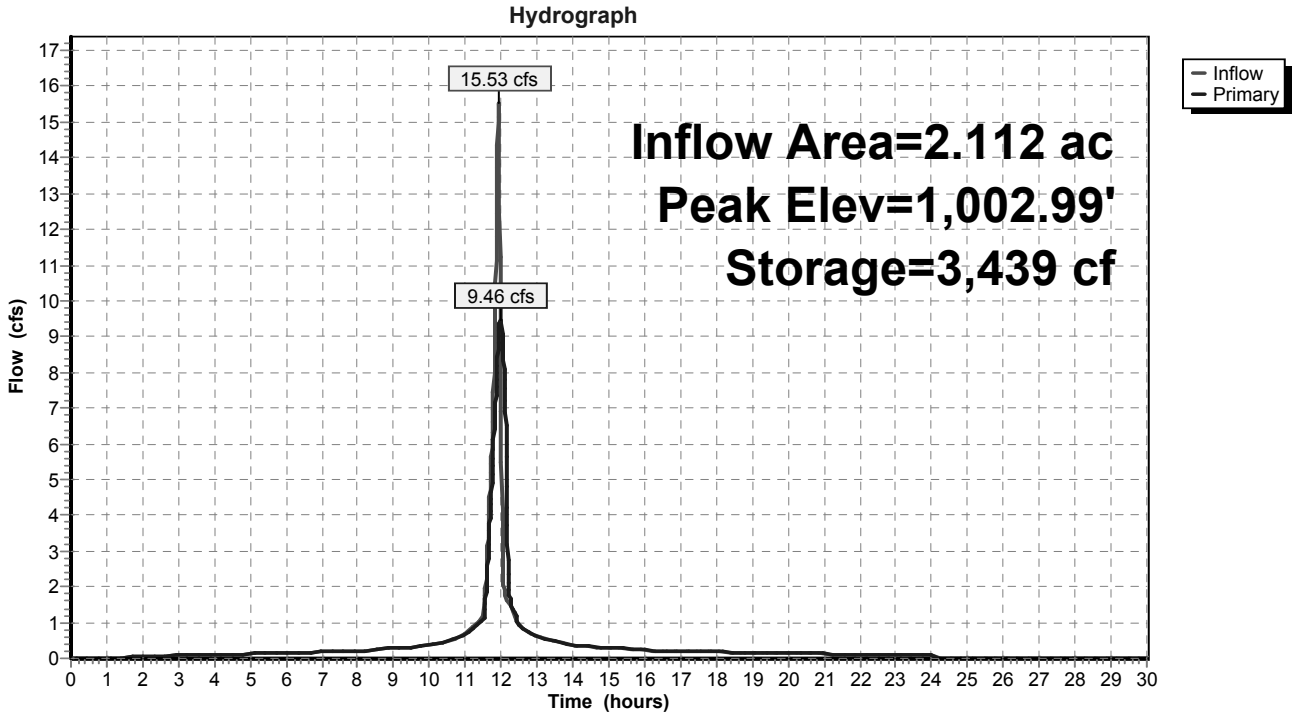

Summary for Pond 5P: Manhole

[87] Warning: Oscillations may require Finer Routing or smaller dt (severity=15)

Inflow Area = 2.755 ac,100.00% Impervious, Inflow Depth = 4.36" for 25-Year event
Inflow = 19.25 cfs @ 11.94 hrs, Volume= 1.002 af
Outflow = 0.89 cfs @ 12.05 hrs, Volume= 1.002 af, Atten= 95%, Lag= 6.6 min
Primary = 0.89 cfs @ 12.05 hrs, Volume= 1.002 af

Routing by Dyn-Stor-Ind method, Time Span= 0.00-30.00 hrs, dt= 0.01 hrs / 3
Peak Elev= 1,002.22' @ 12.92 hrs Surf.Area= 40,289 sf Storage= 18,889 cf

Plug-Flow detention time= (not calculated: outflow precedes inflow)
Center-of-Mass det. time= 167.2 min (910.6 - 743.4)

Volume	Invert	Avail.Storage	Storage Description
#1	1,001.00'	153,424 cf	**Custom Stage Data (Irregular)** Listed below (Recalc)

Elevation (feet)	Surf.Area (sq-ft)	Perim. (feet)	Inc.Store (cubic-feet)	Cum.Store (cubic-feet)	Wet.Area (sq-ft)
1,001.00	5	8.0	0	0	5
1,002.00	32,043	835.0	10,816	10,816	55,485
1,003.00	76,220	1,098.0	52,561	63,377	95,952
1,004.00	104,621	1,260.0	90,046	153,424	126,373

Device	Routing	Invert	Outlet Devices
#1	Primary	997.00'	**6.0" Round Culvert** L= 215.0' CMP, projecting, no headwall, Ke= 0.900 Inlet / Outlet Invert= 997.00' / 996.00' S= 0.0047 '/' Cc= 0.900 n= 0.010 PVC, smooth interior, Flow Area= 0.20 sf
#2	Device 1	1,001.00'	**NF Grate R-2588-C** Head (feet) 0.00 0.10 0.20 0.30 0.40 0.50 0.60 0.70 0.80 0.90 1.00 1.50 2.00 Disch. (cfs) 0.000 0.800 2.200 3.600 4.800 6.500 7.100 7.700 8.200 8.700 9.100 11.200 12.900

Primary OutFlow Max=0.89 cfs @ 12.05 hrs HW=1,002.17' TW=998.35' (Dynamic Tailwater)
└─**1=Culvert** (Outlet Controls 0.89 cfs @ 4.53 fps)
  └─**2=NF Grate R-2588-C** (Passes 0.89 cfs of 9.81 cfs potential flow)

Pond 5P: Manhole

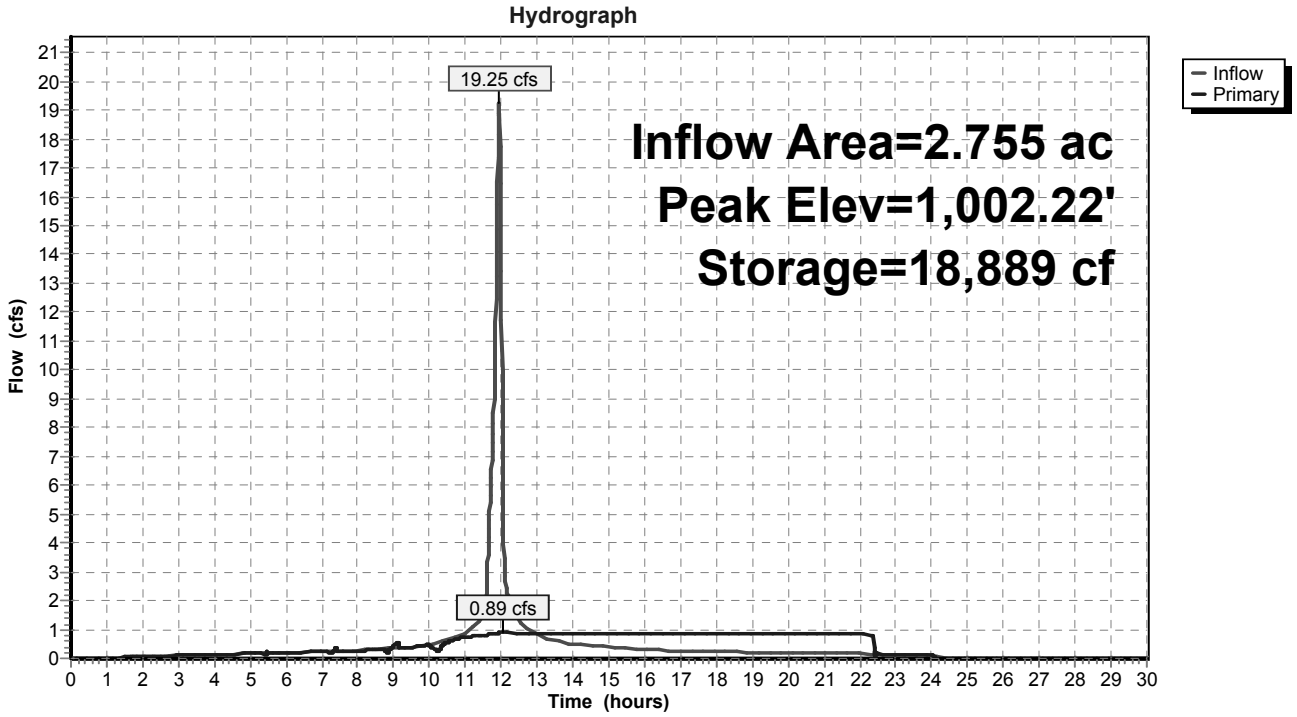

Summary for Pond 6P: Pump to WSF1

Inflow Area = 2.755 ac,100.00% Impervious, Inflow Depth = 4.36" for 25-Year event
Inflow = 0.89 cfs @ 12.05 hrs, Volume= 1.002 af
Outflow = 0.91 cfs @ 8.86 hrs, Volume= 0.998 af, Atten= 0%, Lag= 0.0 min
Primary = 0.91 cfs @ 8.86 hrs, Volume= 1.000 af

Routing by Dyn-Stor-Ind method, Time Span= 0.00-30.00 hrs, dt= 0.01 hrs / 3
Starting Elev= 1,000.00' Surf.Area= 0.008 ac Storage= 0.041 af
Peak Elev= 1,001.00' @ 7.29 hrs Surf.Area= 0.008 ac Storage= 0.050 af (0.008 af above start)

Plug-Flow detention time= 37.0 min calculated for 0.957 af (95% of inflow)
Center-of-Mass det. time= (not calculated: outflow precedes inflow)

Volume	Invert	Avail.Storage	Storage Description
#1	995.00'	0.066 af	**8.00'W x 45.00'L x 8.00'H Tank**

Device	Routing	Invert	Outlet Devices
#1	Primary	1,001.00'	**V4K1170 5HP 300GPM Pump** Discharges@1,007.00' Turns Off@998.00' 6.0" Diam. x 840.0' Long Discharge, Hazen-Williams C= 130 Flow (gpm)= 100.0 200.0 300.0 400.0 500.0 Head (feet)= 29.00 25.00 22.00 18.50 14.00 -Loss (feet)= 0.88 3.16 6.70 11.42 17.26 =Lift (feet)= 28.12 21.84 15.30 7.08 -3.26

Primary OutFlow Max=0.91 cfs @ 8.86 hrs HW=1,000.97' (Free Discharge)
└─**1=V4K1170 5HP 300GPM Pump** (Pump Controls 0.91 cfs)

Pond 6P: Pump to WSF1

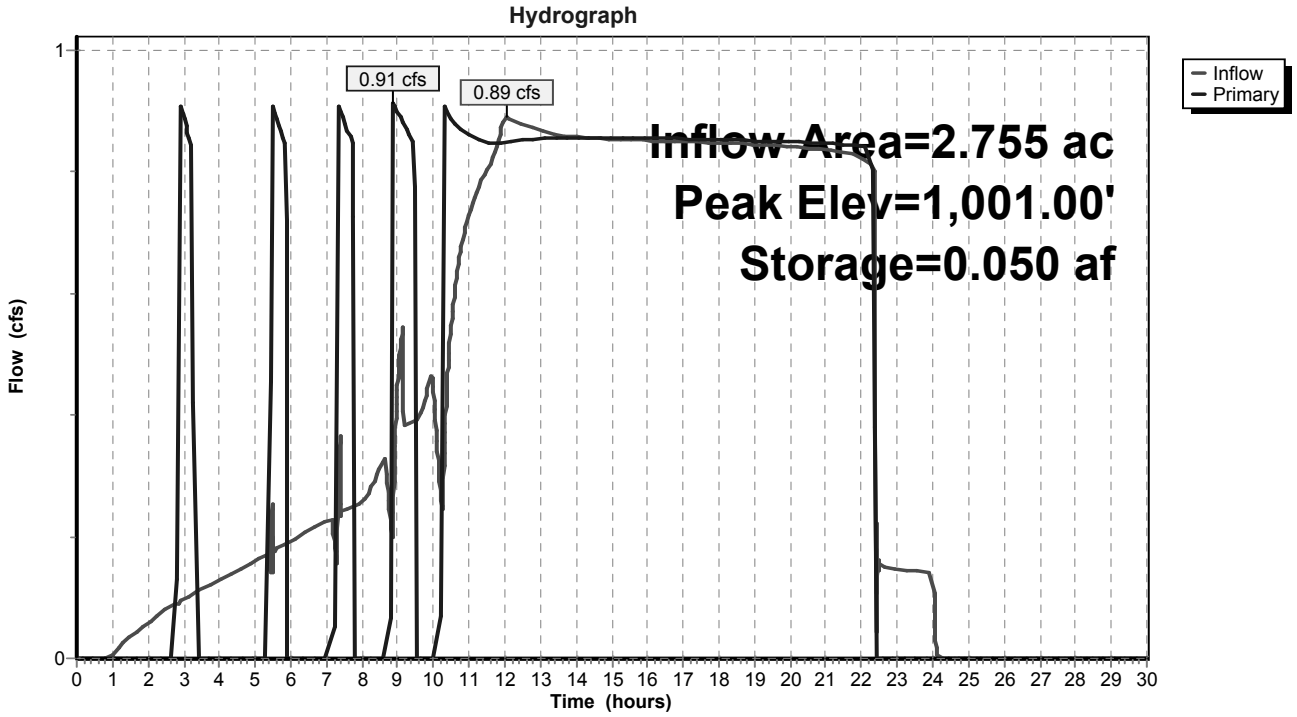

Summary for Pond 7P: Tank Inlet Weir

[57] Hint: Peaked at 997.94' (Flood elevation advised)

Inflow Area =	9.699 ac,100.00% Impervious, Inflow Depth = 4.36" for 25-Year event				
Inflow =	59.33 cfs @	11.99 hrs,	Volume=	3.527 af	
Outflow =	59.33 cfs @	11.99 hrs,	Volume=	3.527 af,	Atten= 0%, Lag= 0.0 min
Primary =	59.33 cfs @	11.99 hrs,	Volume=	3.527 af	

Routing by Dyn-Stor-Ind method, Time Span= 0.00-30.00 hrs, dt= 0.01 hrs / 3
Peak Elev= 997.94' @ 12.32 hrs

Device	Routing	Invert	Outlet Devices
#1	Primary	997.00'	**10.0' long x 0.5' breadth Broad-Crested Rectangular Weir X 2.00** Head (feet) 0.20 0.40 0.60 0.80 1.00 Coef. (English) 2.80 2.92 3.08 3.30 3.32

Primary OutFlow Max=59.31 cfs @ 11.99 hrs HW=997.93' TW=996.56' (Dynamic Tailwater)
└─**1=Broad-Crested Rectangular Weir** (Weir Controls 59.31 cfs @ 3.19 fps)

Pond 7P: Tank Inlet Weir

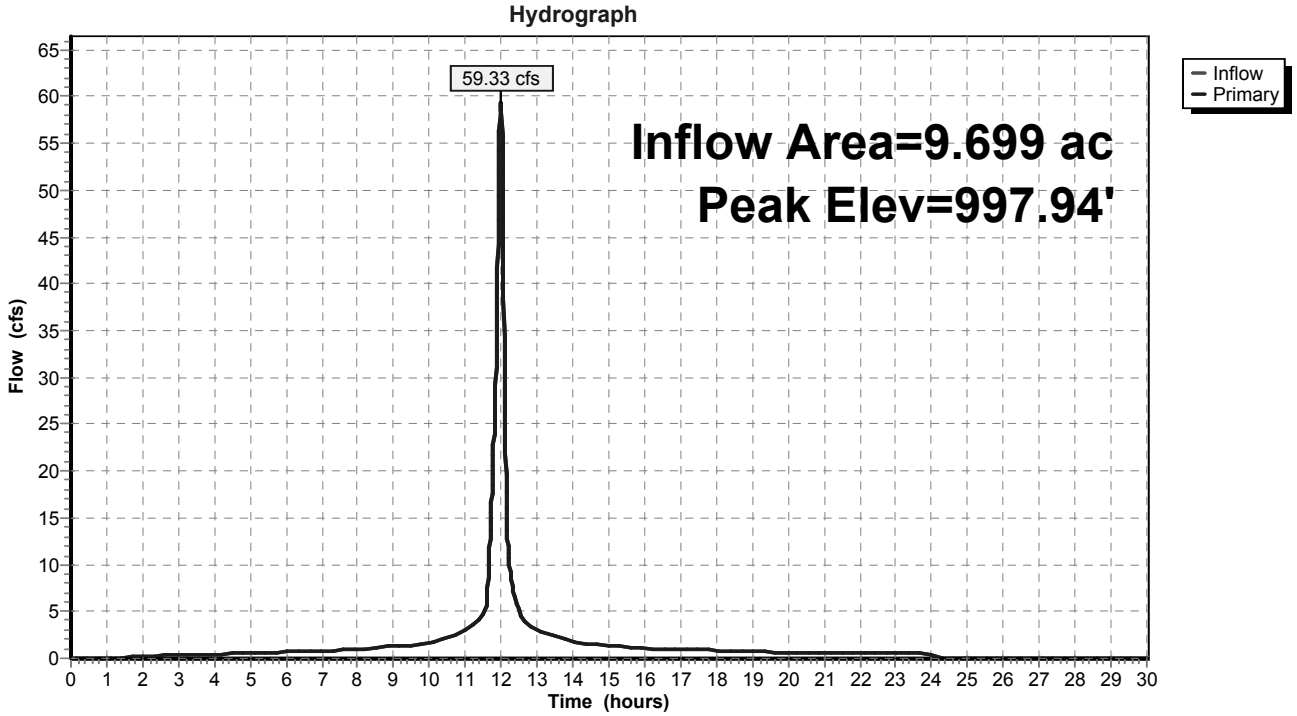

Summary for Pond 8P: Feed Pad Basin/Pump Station

[99] Warning: Min. Lift of 9.00' is below pump rating

Inflow Area =	9.699 ac,100.00% Impervious, Inflow Depth = 4.36" for 25-Year event				
Inflow =	59.33 cfs @	11.99 hrs,	Volume=	3.527 af	
Outflow =	7.17 cfs @	12.33 hrs,	Volume=	3.397 af,	Atten= 88%, Lag= 20.4 min
Primary =	1.60 cfs @	12.33 hrs,	Volume=	1.330 af	
Secondary =	5.57 cfs @	12.01 hrs,	Volume=	2.067 af	

Routing by Dyn-Stor-Ind method, Time Span= 0.00-30.00 hrs, dt= 0.01 hrs / 3
Peak Elev= 997.94' @ 12.33 hrs Surf.Area= 18,959 sf Storage= 86,790 cf

Plug-Flow detention time= 163.5 min calculated for 3.397 af (96% of inflow)
Center-of-Mass det. time= 140.3 min (887.6 - 747.3)

Volume	Invert	Avail.Storage	Storage Description
#1	991.00'	119,332 cf	**Custom Stage Data (Irregular)** Listed below (Recalc)

Elevation (feet)	Surf.Area (sq-ft)	Perim. (feet)	Inc.Store (cubic-feet)	Cum.Store (cubic-feet)	Wet.Area (sq-ft)
991.00	11,760	472.0	0	0	11,760
992.00	11,850	472.0	11,805	11,805	12,232
993.00	11,940	472.0	11,895	23,700	12,704
994.00	12,030	472.0	11,985	35,685	13,176
995.00	12,120	472.0	12,075	47,760	13,648
996.00	12,210	472.0	12,165	59,925	14,120
997.00	12,300	472.0	12,255	72,180	14,592
998.00	19,416	708.0	15,723	87,903	36,761
999.00	45,235	1,007.0	31,429	119,332	77,576

Device	Routing	Invert	Outlet Devices
#1	Primary	993.00'	**Pump V4P1170 10HP 500GPM** Discharges@1,007.00' Turns Off@991.01' 6.0" Diam. x 400.0' Long Discharge, Hazen-Williams C= 130 Flow (gpm)= 0.0 200.0 400.0 500.0 600.0 700.0 800.0 Head (feet)= 54.00 44.00 36.00 33.80 30.50 26.00 20.50 -Loss (feet)= 0.00 1.51 5.44 8.22 11.52 15.33 19.63 =Lift (feet)= 54.00 42.49 30.56 25.58 18.98 10.67 0.87
#2	Secondary	996.00'	**Pump E8K1170 25HP 2000GPM** Discharges@1,007.00' Turns Off@992.00' 10.0" Diam. x 427.0' Long Discharge, Hazen-Williams C= 130 Flow (gpm)= 0.0 1,000.0 1,500.0 2,000.0 2,200.0 2,500.0 Head (feet)= 61.00 50.00 42.00 33.90 31.00 24.50 -Loss (feet)= 0.00 2.63 5.58 9.50 11.33 14.36 =Lift (feet)= 61.00 47.37 36.42 24.40 19.67 10.14

Primary OutFlow Max=1.60 cfs @ 12.33 hrs HW=997.94' (Free Discharge)
└─**1=Pump V4P1170 10HP 500GPM** (Pump Controls 1.60 cfs)

Secondary OutFlow Max=5.57 cfs @ 12.01 hrs HW=996.87' (Free Discharge)
└─**2=Pump E8K1170 25HP 2000GPM** (Pump Controls 5.57 cfs)

Pond 8P: Feed Pad Basin/Pump Station

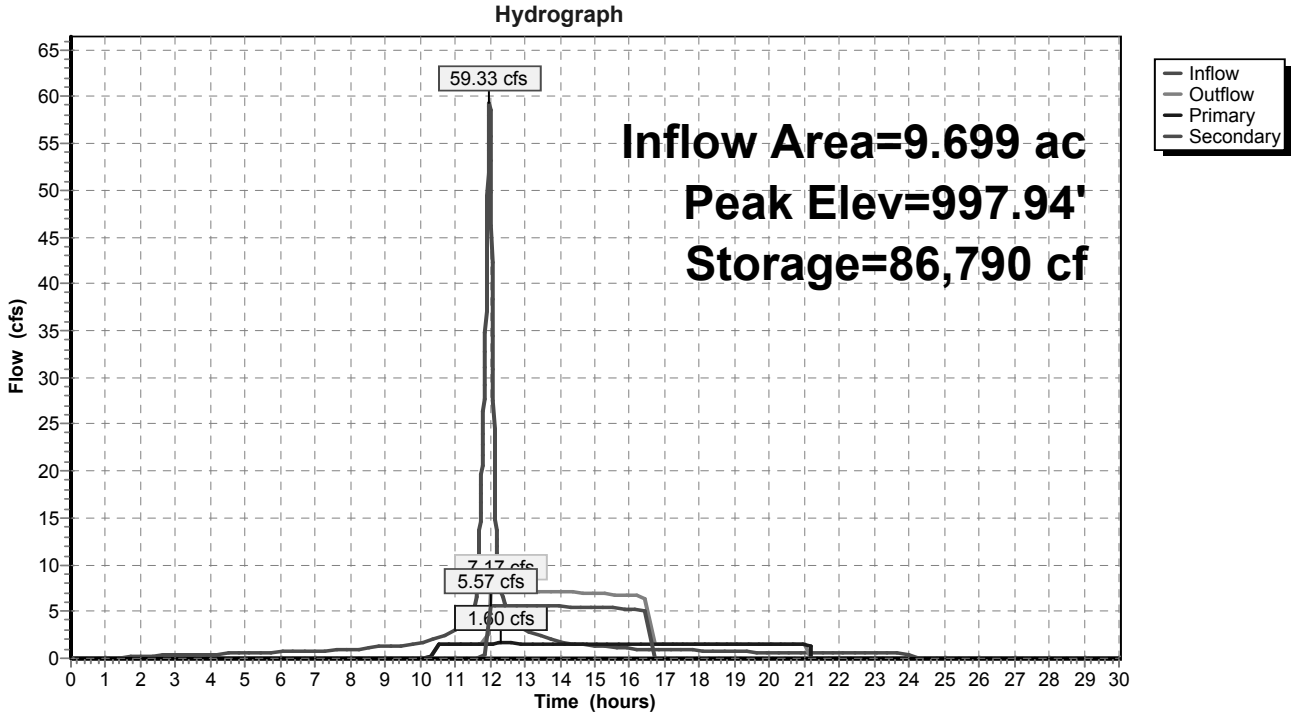

Summary for Subcatchment 1S: Feed Pad

Runoff = 74.98 cfs @ 11.99 hrs, Volume= 4.496 af, Depth= 5.56"

Runoff by SCS TR-20 method, UH=SCS, Weighted-CN, Time Span= 0.00-30.00 hrs, dt= 0.01 hrs
Type II 24-hr 100-Year Rainfall=5.80"

Area (sf)	CN	Description
422,500	98	Paved parking, HSG A
422,500		100.00% Impervious Area

Tc (min)	Length (feet)	Slope (ft/ft)	Velocity (ft/sec)	Capacity (cfs)	Description
3.4	300	0.0150	1.45		**Sheet Flow,** Smooth surfaces n= 0.011 P2= 2.90"
0.5	75	0.0150	2.49		**Shallow Concentrated Flow,** Paved Kv= 20.3 fps
4.2	455	0.0080	1.82		**Shallow Concentrated Flow,** Paved Kv= 20.3 fps
8.1	830	Total			

Subcatchment 1S: Feed Pad

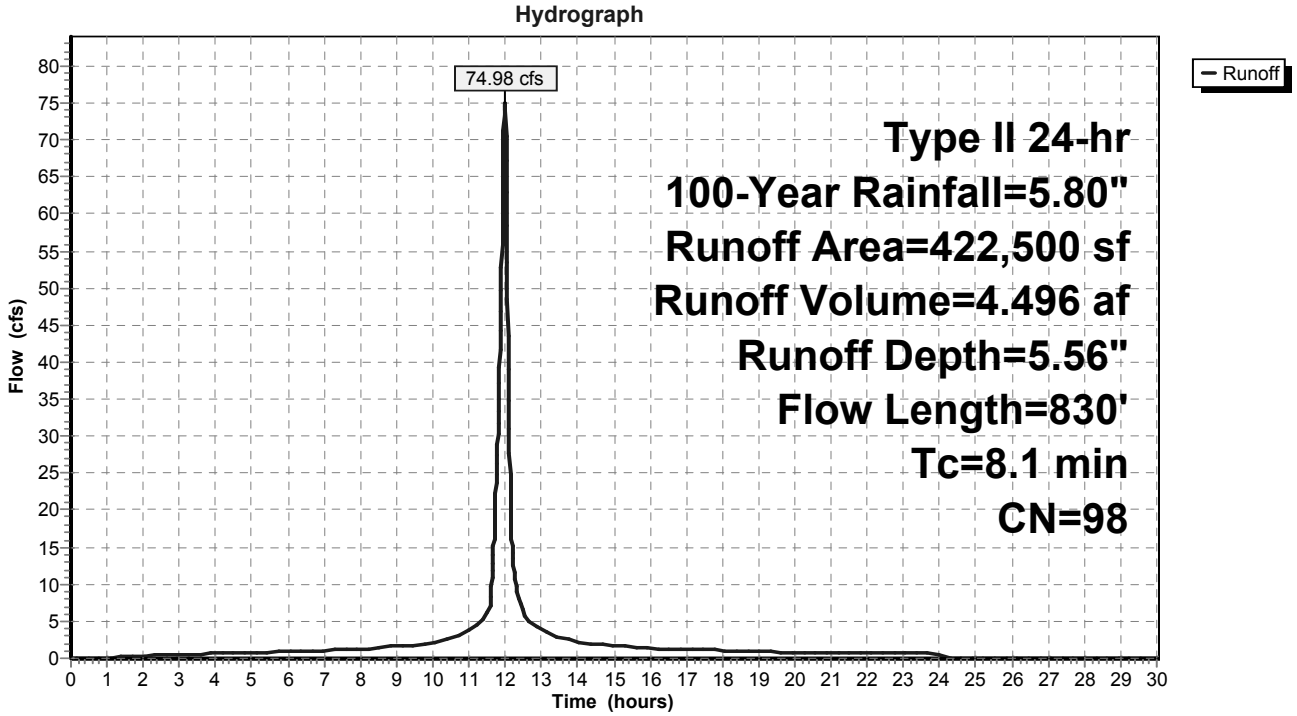

Summary for Subcatchment 2S: Stacking Pad

Runoff = 24.32 cfs @ 11.94 hrs, Volume= 1.277 af, Depth= 5.56"

Runoff by SCS TR-20 method, UH=SCS, Weighted-CN, Time Span= 0.00-30.00 hrs, dt= 0.01 hrs
Type II 24-hr 100-Year Rainfall=5.80"

Area (sf)	CN	Description
120,000	98	Paved parking, HSG A
120,000		100.00% Impervious Area

Tc (min)	Length (feet)	Slope (ft/ft)	Velocity (ft/sec)	Capacity (cfs)	Description
3.5	300	0.0140	1.41		**Sheet Flow,** Smooth surfaces n= 0.011 P2= 2.90"
0.4	50	0.0090	1.93		**Shallow Concentrated Flow,** Paved Kv= 20.3 fps
3.9	350	Total			

Subcatchment 2S: Stacking Pad

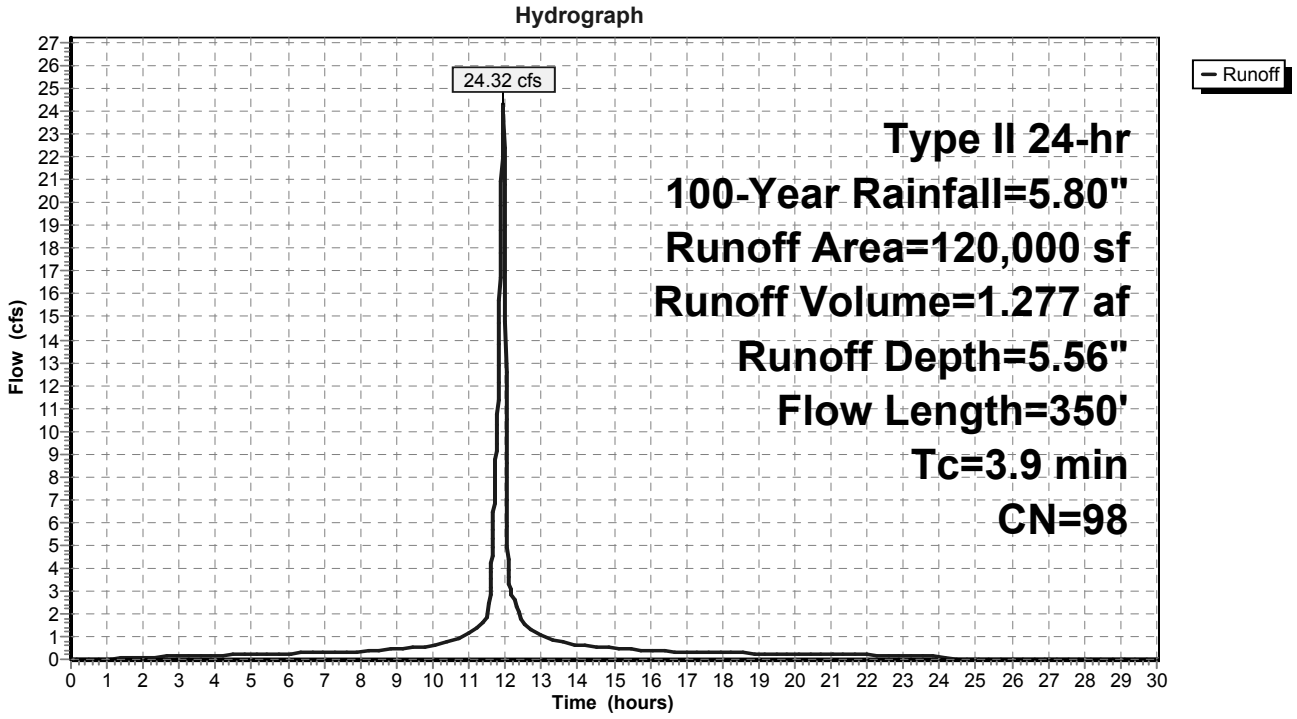

Summary for Subcatchment 3S: Drive Area

Runoff = 19.62 cfs @ 11.92 hrs, Volume= 0.979 af, Depth= 5.56"

Runoff by SCS TR-20 method, UH=SCS, Weighted-CN, Time Span= 0.00-30.00 hrs, dt= 0.01 hrs
Type II 24-hr 100-Year Rainfall=5.80"

Area (sf)	CN	Description
92,020	98	Paved parking, HSG A
92,020		100.00% Impervious Area

Tc (min)	Length (feet)	Slope (ft/ft)	Velocity (ft/sec)	Capacity (cfs)	Description
0.2	40	0.4200	3.68		**Sheet Flow,** Smooth surfaces n= 0.011 P2= 2.90"
0.2	20	0.0500	1.37		**Sheet Flow,** Smooth surfaces n= 0.011 P2= 2.90"
1.8	240	0.0125	2.27		**Shallow Concentrated Flow,** Paved Kv= 20.3 fps
2.2	300	Total			

Subcatchment 3S: Drive Area

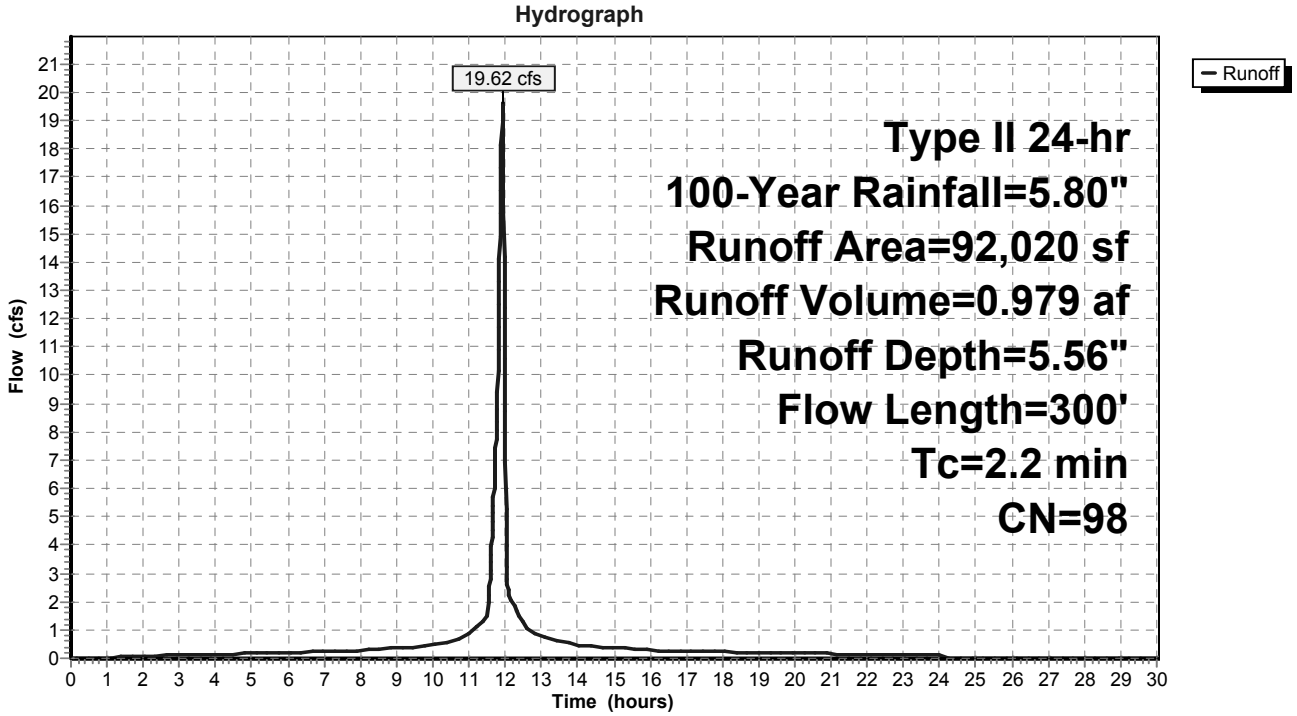

Summary for Pond 4P: Stormwater Manhole

Inflow Area = 2.112 ac,100.00% Impervious, Inflow Depth = 5.56" for 100-Year event
Inflow = 19.62 cfs @ 11.92 hrs, Volume= 0.979 af
Outflow = 10.11 cfs @ 11.99 hrs, Volume= 0.979 af, Atten= 48%, Lag= 4.1 min
Primary = 10.11 cfs @ 11.99 hrs, Volume= 0.979 af

Routing by Dyn-Stor-Ind method, Time Span= 0.00-30.00 hrs, dt= 0.01 hrs / 3
Peak Elev= 1,003.23' @ 11.99 hrs Surf.Area= 10,119 sf Storage= 5,430 cf

Plug-Flow detention time= 2.3 min calculated for 0.979 af (100% of inflow)
Center-of-Mass det. time= 2.3 min (740.2 - 738.0)

Volume	Invert	Avail.Storage	Storage Description
#1	1,001.90'	17,973 cf	**Custom Stage Data (Prismatic)** Listed below (Recalc)

Elevation (feet)	Surf.Area (sq-ft)	Inc.Store (cubic-feet)	Cum.Store (cubic-feet)
1,001.90	5	0	0
1,003.00	6,400	3,523	3,523
1,004.00	22,500	14,450	17,973

Device	Routing	Invert	Outlet Devices
#1	Primary	999.50'	**18.0" Round Culvert** L= 190.0' CMP, projecting, no headwall, Ke= 0.900 Inlet / Outlet Invert= 999.50' / 999.00' S= 0.0026 '/' Cc= 0.900 n= 0.013 Corrugated PE, smooth interior, Flow Area= 1.77 sf
#2	Device 1	1,001.90'	**NF Grate R-2588-C** Head (feet) 0.00 0.10 0.20 0.30 0.40 0.50 0.60 0.70 0.80 0.90 1.00 1.50 2.00 Disch. (cfs) 0.000 0.800 2.200 3.600 4.800 6.500 7.100 7.700 8.200 8.700 9.100 11.200 12.900

Primary OutFlow Max=10.11 cfs @ 11.99 hrs HW=1,003.23' (Free Discharge)
└─**1=Culvert** (Barrel Controls 10.11 cfs @ 5.72 fps)
  └─**2=NF Grate R-2588-C** (Passes 10.11 cfs of 10.49 cfs potential flow)

Pond 4P: Stormwater Manhole

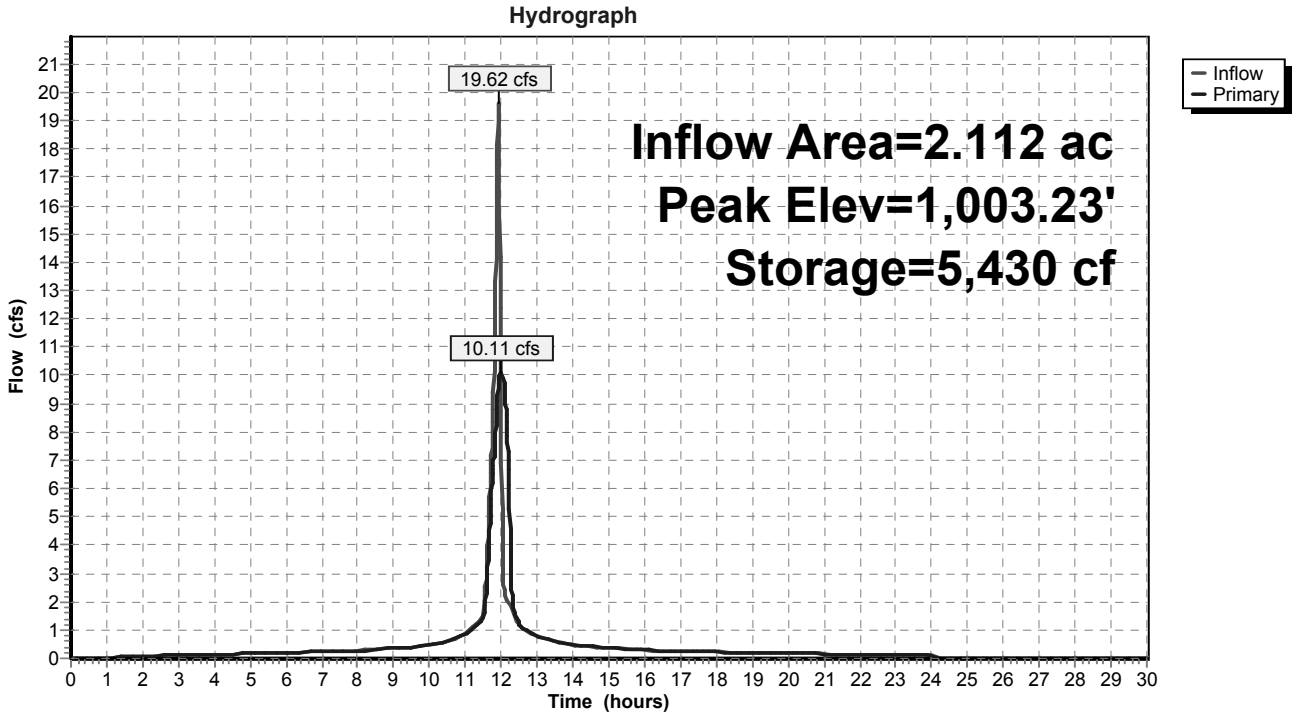

Summary for Pond 5P: Manhole

[87] Warning: Oscillations may require Finer Routing or smaller dt (severity=16)

Inflow Area = 2.755 ac,100.00% Impervious, Inflow Depth = 5.56" for 100-Year event
Inflow = 24.32 cfs @ 11.94 hrs, Volume= 1.277 af
Outflow = 0.87 cfs @ 12.28 hrs, Volume= 1.277 af, Atten= 96%, Lag= 19.9 min
Primary = 0.87 cfs @ 12.28 hrs, Volume= 1.277 af

Routing by Dyn-Stor-Ind method, Time Span= 0.00-30.00 hrs, dt= 0.01 hrs / 3
Peak Elev= 1,002.39' @ 13.32 hrs Surf.Area= 47,217 sf Storage= 26,351 cf

Plug-Flow detention time= (not calculated: outflow precedes inflow)
Center-of-Mass det. time= 250.5 min (990.1 - 739.6)

Volume	Invert	Avail.Storage	Storage Description
#1	1,001.00'	153,424 cf	**Custom Stage Data (Irregular)** Listed below (Recalc)

Elevation (feet)	Surf.Area (sq-ft)	Perim. (feet)	Inc.Store (cubic-feet)	Cum.Store (cubic-feet)	Wet.Area (sq-ft)
1,001.00	5	8.0	0	0	5
1,002.00	32,043	835.0	10,816	10,816	55,485
1,003.00	76,220	1,098.0	52,561	63,377	95,952
1,004.00	104,621	1,260.0	90,046	153,424	126,373

Device	Routing	Invert	Outlet Devices
#1	Primary	997.00'	**6.0" Round Culvert** L= 215.0' CMP, projecting, no headwall, Ke= 0.900 Inlet / Outlet Invert= 997.00' / 996.00' S= 0.0047 '/' Cc= 0.900 n= 0.010 PVC, smooth interior, Flow Area= 0.20 sf
#2	Device 1	1,001.00'	**NF Grate R-2588-C** Head (feet) 0.00 0.10 0.20 0.30 0.40 0.50 0.60 0.70 0.80 0.90 1.00 1.50 2.00 Disch. (cfs) 0.000 0.800 2.200 3.600 4.800 6.500 7.100 7.700 8.200 8.700 9.100 11.200 12.900

Primary OutFlow Max=0.87 cfs @ 12.28 hrs HW=1,002.36' TW=998.71' (Dynamic Tailwater)
└─**1=Culvert** (Outlet Controls 0.87 cfs @ 4.43 fps)
  └─**2=NF Grate R-2588-C** (Passes 0.87 cfs of 10.60 cfs potential flow)

Pond 5P: Manhole

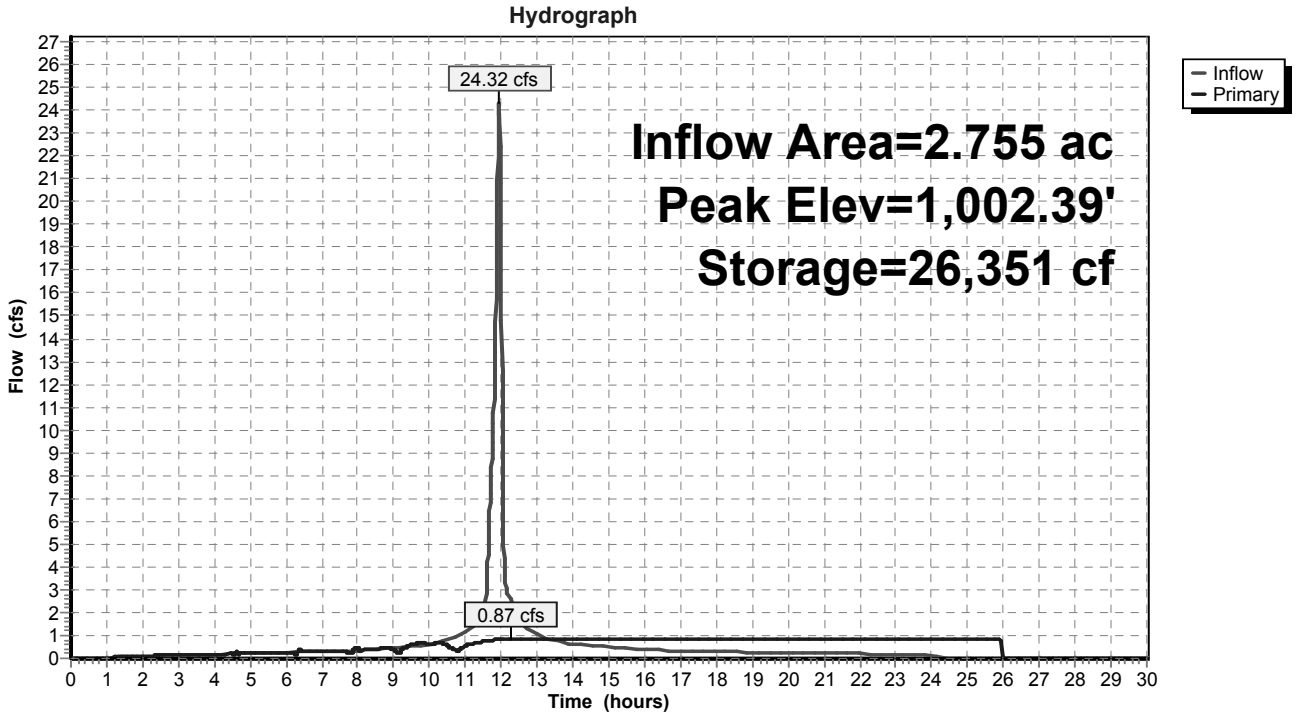

Summary for Pond 6P: Pump to WSF1

Inflow Area = 2.755 ac,100.00% Impervious, Inflow Depth = 5.56" for 100-Year event
Inflow = 0.87 cfs @ 12.28 hrs, Volume= 1.277 af
Outflow = 0.91 cfs @ 6.30 hrs, Volume= 1.293 af, Atten= 0%, Lag= 0.0 min
Primary = 0.91 cfs @ 6.30 hrs, Volume= 1.295 af

Routing by Dyn-Stor-Ind method, Time Span= 0.00-30.00 hrs, dt= 0.01 hrs / 3
Starting Elev= 1,000.00' Surf.Area= 0.008 ac Storage= 0.041 af
Peak Elev= 1,001.00' @ 2.33 hrs Surf.Area= 0.008 ac Storage= 0.050 af (0.008 af above start)

Plug-Flow detention time= 35.4 min calculated for 1.252 af (98% of inflow)
Center-of-Mass det. time= (not calculated: outflow precedes inflow)

Volume	Invert	Avail.Storage	Storage Description
#1	995.00'	0.066 af	**8.00'W x 45.00'L x 8.00'H Tank**

Device	Routing	Invert	Outlet Devices
#1	Primary	1,001.00'	**V4K1170 5HP 300GPM Pump** Discharges@1,007.00' Turns Off@998.00' 6.0" Diam. x 840.0' Long Discharge, Hazen-Williams C= 130 Flow (gpm)= 100.0 200.0 300.0 400.0 500.0 Head (feet)= 29.00 25.00 22.00 18.50 14.00 -Loss (feet)= 0.88 3.16 6.70 11.42 17.26 =Lift (feet)= 28.12 21.84 15.30 7.08 -3.26

Primary OutFlow Max=0.91 cfs @ 6.30 hrs HW=1,000.97' (Free Discharge)
└─**1=V4K1170 5HP 300GPM Pump** (Pump Controls 0.91 cfs)

Pond 6P: Pump to WSF1

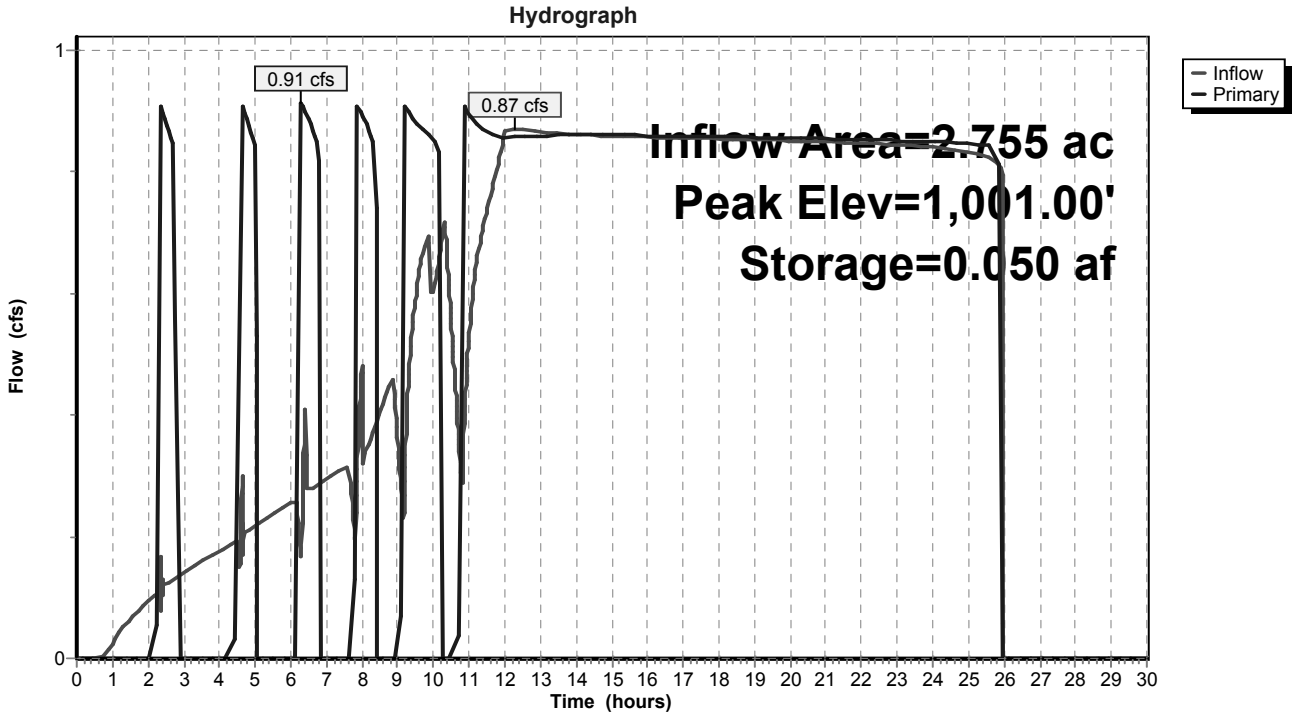

Summary for Pond 7P: Tank Inlet Weir

[57] Hint: Peaked at 998.76' (Flood elevation advised)

Inflow Area =	9.699 ac,100.00% Impervious, Inflow Depth = 5.56" for 100-Year event				
Inflow =	74.98 cfs @	11.99 hrs,	Volume=	4.496 af	
Outflow =	74.98 cfs @	11.99 hrs,	Volume=	4.496 af,	Atten= 0%, Lag= 0.0 min
Primary =	74.98 cfs @	11.99 hrs,	Volume=	4.496 af	

Routing by Dyn-Stor-Ind method, Time Span= 0.00-30.00 hrs, dt= 0.01 hrs / 3
Peak Elev= 998.76' @ 12.45 hrs

Device	Routing	Invert	Outlet Devices
#1	Primary	997.00'	**10.0' long x 0.5' breadth Broad-Crested Rectangular Weir X 2.00** Head (feet) 0.20 0.40 0.60 0.80 1.00 Coef. (English) 2.80 2.92 3.08 3.30 3.32

Primary OutFlow Max=74.99 cfs @ 11.99 hrs HW=998.22' TW=997.64' (Dynamic Tailwater)
└─**1=Broad-Crested Rectangular Weir** (Weir Controls 74.99 cfs @ 3.06 fps)

Pond 7P: Tank Inlet Weir

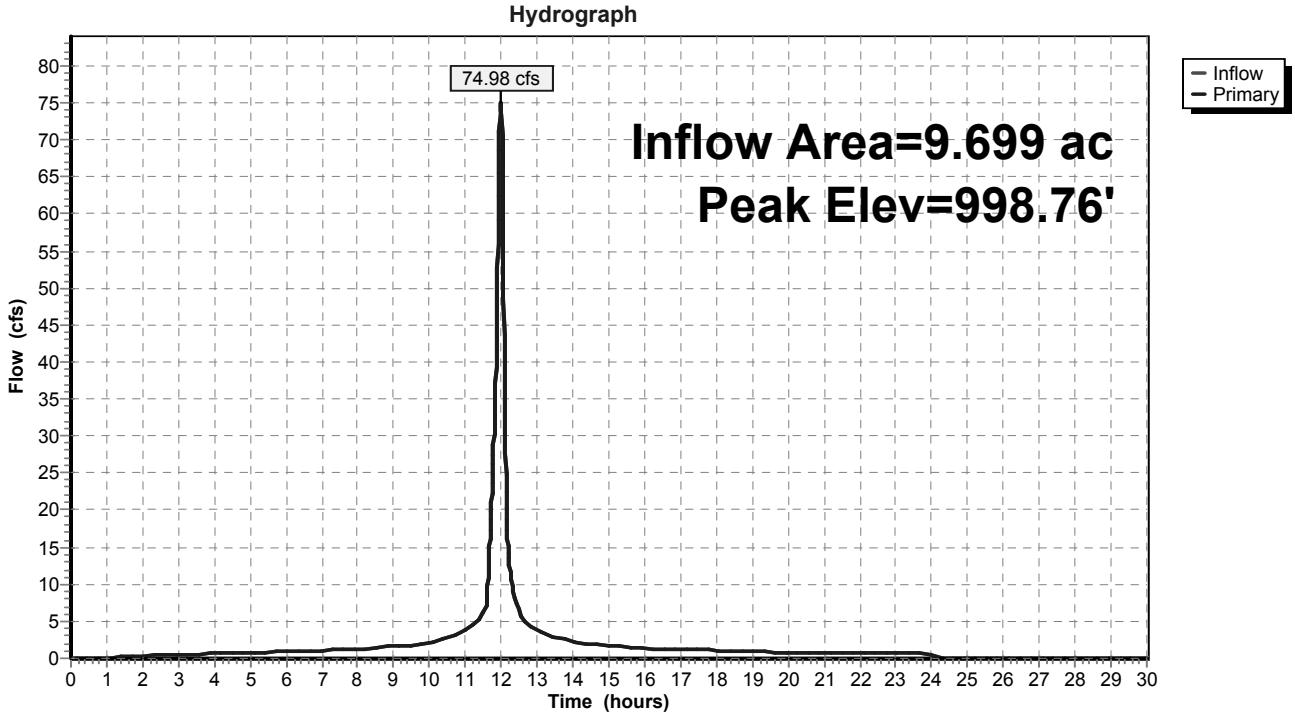

Summary for Pond 8P: Feed Pad Basin/Pump Station

[99] Warning: Min. Lift of 8.16' is below pump rating

Inflow Area =	9.699 ac,100.00% Impervious, Inflow Depth = 5.56" for 100-Year event				
Inflow =	74.98 cfs @	11.99 hrs,	Volume=	4.496 af	
Outflow =	7.18 cfs @	12.45 hrs,	Volume=	4.429 af,	Atten= 90%, Lag= 27.6 min
Primary =	1.61 cfs @	12.45 hrs,	Volume=	1.691 af	
Secondary =	5.57 cfs @	11.95 hrs,	Volume=	2.740 af	

Routing by Dyn-Stor-Ind method, Time Span= 0.00-30.00 hrs, dt= 0.01 hrs / 3
Peak Elev= 998.76' @ 12.45 hrs Surf.Area= 38,043 sf Storage= 109,330 cf

Plug-Flow detention time= 184.4 min calculated for 4.429 af (99% of inflow)
Center-of-Mass det. time= 174.5 min (917.9 - 743.5)

Volume	Invert	Avail.Storage	Storage Description
#1	991.00'	119,332 cf	**Custom Stage Data (Irregular)** Listed below (Recalc)

Elevation (feet)	Surf.Area (sq-ft)	Perim. (feet)	Inc.Store (cubic-feet)	Cum.Store (cubic-feet)	Wet.Area (sq-ft)
991.00	11,760	472.0	0	0	11,760
992.00	11,850	472.0	11,805	11,805	12,232
993.00	11,940	472.0	11,895	23,700	12,704
994.00	12,030	472.0	11,985	35,685	13,176
995.00	12,120	472.0	12,075	47,760	13,648
996.00	12,210	472.0	12,165	59,925	14,120
997.00	12,300	472.0	12,255	72,180	14,592
998.00	19,416	708.0	15,723	87,903	36,761
999.00	45,235	1,007.0	31,429	119,332	77,576

Device	Routing	Invert	Outlet Devices
#1	Primary	993.00'	**Pump V4P1170 10HP 500GPM** Discharges@1,007.00' Turns Off@991.01' 6.0" Diam. x 400.0' Long Discharge, Hazen-Williams C= 130 Flow (gpm)= 0.0 200.0 400.0 500.0 600.0 700.0 800.0 Head (feet)= 54.00 44.00 36.00 33.80 30.50 26.00 20.50 -Loss (feet)= 0.00 1.51 5.44 8.22 11.52 15.33 19.63 =Lift (feet)= 54.00 42.49 30.56 25.58 18.98 10.67 0.87
#2	Secondary	996.00'	**Pump E8K1170 25HP 2000GPM** Discharges@1,007.00' Turns Off@992.00' 10.0" Diam. x 427.0' Long Discharge, Hazen-Williams C= 130 Flow (gpm)= 0.0 1,000.0 1,500.0 2,000.0 2,200.0 2,500.0 Head (feet)= 61.00 50.00 42.00 33.90 31.00 24.50 -Loss (feet)= 0.00 2.63 5.58 9.50 11.33 14.36 =Lift (feet)= 61.00 47.37 36.42 24.40 19.67 10.14

Primary OutFlow Max=1.61 cfs @ 12.45 hrs HW=998.76' (Free Discharge)
└─**1=Pump V4P1170 10HP 500GPM** (Pump Controls 1.61 cfs)

Secondary OutFlow Max=5.57 cfs @ 11.95 hrs HW=996.99' (Free Discharge)
└─**2=Pump E8K1170 25HP 2000GPM** (Pump Controls 5.57 cfs)

Pond 8P: Feed Pad Basin/Pump Station

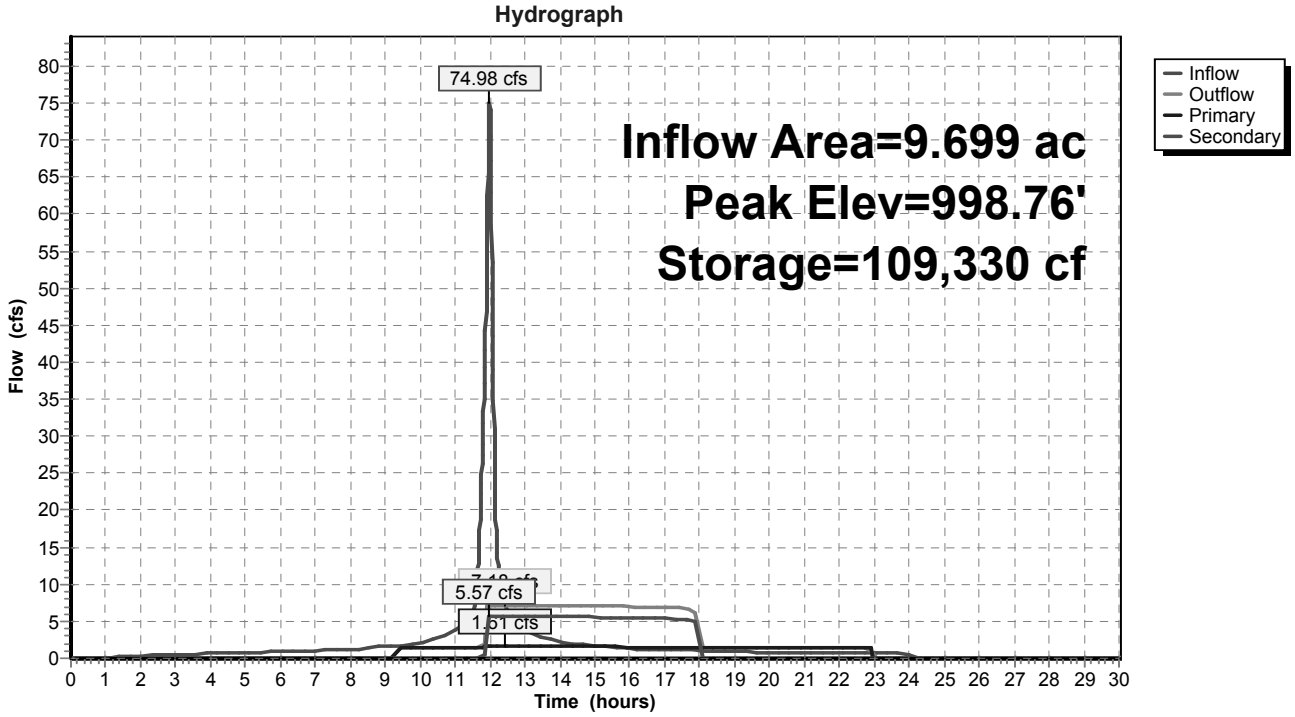

Appendix E – Pipelines and Pump Station Information and Calculations

Waste Transfer Pipes

Pressure Pipelines	Description	Design Pump Flowrate (gpm)	Pipe Size (inches)	TDH (ft)	Velocity (fps)	Pipe Type	System Pressure Rating (psi)	Working Pressure (72% System) (psi)	Working Pressure (72% System) (ft)	Operating Pump: Shut Off Head (ft)	Operating Pump: Flowrate (gpm)	Operating Pump: TDH (ft)
A	Leachate Pump 1	500	6	31.9	5.67	SDR 21	200	144	333	55	525	33.8
B	Leachate Pump 2	2000	10	32.9	8.17	SDR 21	200	144	333	61	2030	33.9
E	SW Mister Tank	300	6	11.4	3.40	SDR 21	200	144	333	24	335	14.8
F	W Mister Tank	300	6	8.7	3.40	SDR 21	200	144	333	16	300	8.7
G	NW Mister Tank	300	6	6.7	3.40	SDR 21	200	144	333	17	335	7.9
H	Holding Area Tank	800	8	24.2	5.11	SDR 21	200	144	333	40	820	25
I	SE Mister Tank	300	6	13.8	3.40	SDR 21	200	144	333	24	315	14.5
J	E Mister Tank	300	6	15	3.40	SDR 21	200	144	333	24	300	15
K	NE Mister Tank	300	6	17.6	3.40	SDR 21	200	144	333	33	330	21
L	Separation Building	300	6	18.5	3.40	SDR 21	200	144	333	33	335	21
M	Pump Station	100	4	14.8	2.55	SDR 21	200	144	333	24	190	18
N	Pump Station	500	6	23.4	5.67	SDR 21	200	144	333	41	500	23.4
R	Parlor Pump	2500	10	34.2	10.21	SDR 21	200	144	333	65	2500	34.2

Gravity Pipelines	Description	Pipe Size (inches)	Pipe Type
C	Leachate Pipe	18	PE
D	Solid Pad Runoff	6	SDR21
O	Pump Station	12	SDR21
P	WSF1/WSF2	12	SDR21
Q	WSF1/WSF2	12	SDR21
S	Parlor Pipe	12	SDR 21
T	Holding Area Pipe	24	PE

Vaughan

Project: Golden Sales Dairy - Feed Pad Main
Entered By: Carl Edem

CURVE	DIAMETER	HP
A	11.8	15
B	11.3	15
C	10.6	10
D	10	7.5
E	9.5	7.5
F	8.8	5

Capacity (GPM) 500 — M^3/HR 113.6

TDH (Feet) 31.9 — METERS 9.7

Maximum impeller diameter	11.80			
Trim Diameter	10.32	-12.5 % of full diameter		
Est. Efficiency at Operating Point	60.1	%		
Estim HP at Operating Point	6.7	HP	5.00	KW
Max HP at Given RPM / Solid Portion	7.7	HP	5.75	KW
Maximum HP corresponds to	915	GPM	207.80	M^3/HR

Refer to published curves for specific RPM values. HP and EFF values are calculated approximate values and listed for supplemental info only.

Pump Model **V4P**

Type of Friction Calc Used *WATER* C

Nominal Motor RPM **1170**

Pump curve — System Curve (water) — System curve (sludge)
HP required — Operating Point ***(Note: HP & system curve plotted vs FEET scale)***

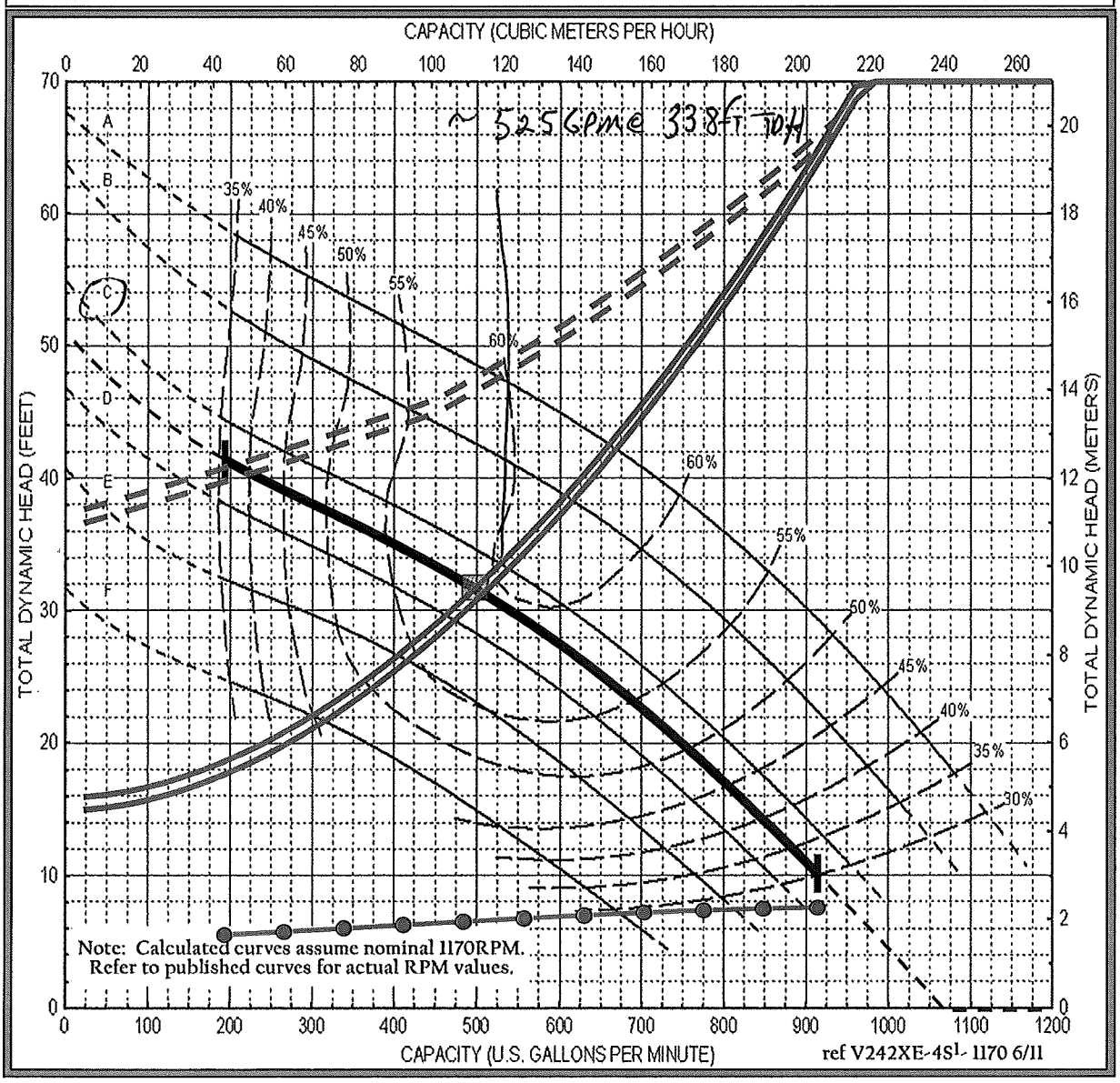

NOTE: INFORMATION PROVIDED IS TO BE USED AS A GUIDELINE ONLY - REFER TO PUBLISHED CURVE TO CONFIRM PERFORMANCE, EFFICIENCY, & HORSEPOWER. FINAL PUMP SELECTION SHALL BE VERIFIED BY PROJECT ENGINEER.

Vaughan

Project: Golden Sales Dairy -Feed Pad Secondary
Entered By: Carl Edem

CURVE	DIAMETER	HP
A	12	30
B	11.5	25
C	11	20
D	10.5	20
E	10	15

Capacity (GPM) 2000 — M^3/HR 454.2

TDH (Feet) 32.9 — METERS 10.0

Maximum impeller diameter	12.00			
Trim Diameter	11.38	-5.2 % of full diameter		
Est. Efficiency at Operating Point	75.6	%		
Estim HP at Operating Point	22.0	HP	16.41	KW
Max HP at Given RPM / Solid Portion	22.0	HP	16.41	KW
Maximum HP corresponds to	2031	GPM	461.31	M^3/HR

Refer to published curves for specific RPM values. HP and EFF values are calculated approximate values and listed for supplemental info only.

Pump Model **E8K**

Type of Friction Calc Used *WATER* C

Nominal Motor RPM **1170**

Pump curve — System Curve (water) — System curve (sludge)
HP required — Operating Point ***(Note: HP & system curve plotted vs FEET scale)***

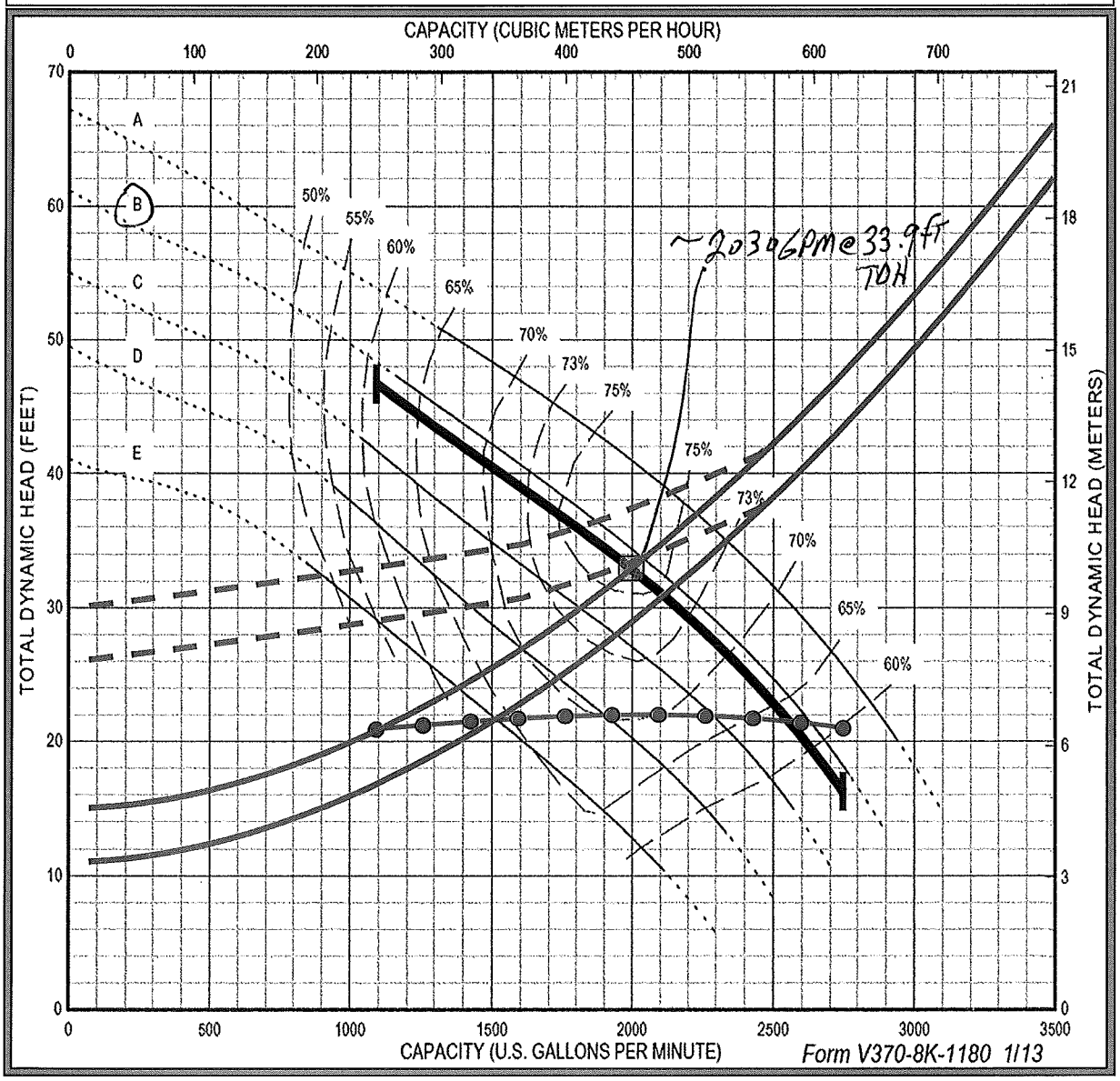

Form V370-8K-1180 1/13

NOTE: INFORMATION PROVIDED IS TO BE USED AS A GUIDELINE ONLY - REFER TO PUBLISHED CURVE TO CONFIRM PERFORMANCE, EFFICIENCY, & HORSEPOWER. FINAL PUMP SELECTION SHALL BE VERIFIED BY PROJECT ENGINEER.

Vaughan Company, Inc. 364 Monte-Elma Road Montesano, WA 98563
(360) 249-4042

Vaughan

Project: Golden Sands Dairy - SW mister tank
Entered By: Carl Edem

CURVE	DIAMETER	HP
A	8.9	5
B	8.6	5
C	8	5
D	7.8	5
E	7	5
F	6.3	5

Capacity (GPM) 300 — M^3/HR 68.1

TDH (Feet) 11.4 — METERS 3.5

Maximum impeller diameter	8.90			
Trim Diameter	7.32	-17.8 % of full diameter		
Est. Efficiency at Operating Point	41.1	%		
Estim HP at Operating Point	2.1	HP	1.57	KW
Max HP at Given RPM / Solid Portion	2.3	HP	1.75	KW
Maximum HP corresponds to	461	GPM	104.69	M^3/HR

Refer to published curves for specific RPM values. HP and EFF values are calculated approximate values and listed for supplemental info only.

Pump Model **V4K**

Type of Friction Calc Used *WATER* C

Nominal Motor RPM **1170**

Pump curve — System Curve (water) — System curve (sludge)
HP required — Operating Point ***(Note: HP & system curve plotted vs FEET scale)***

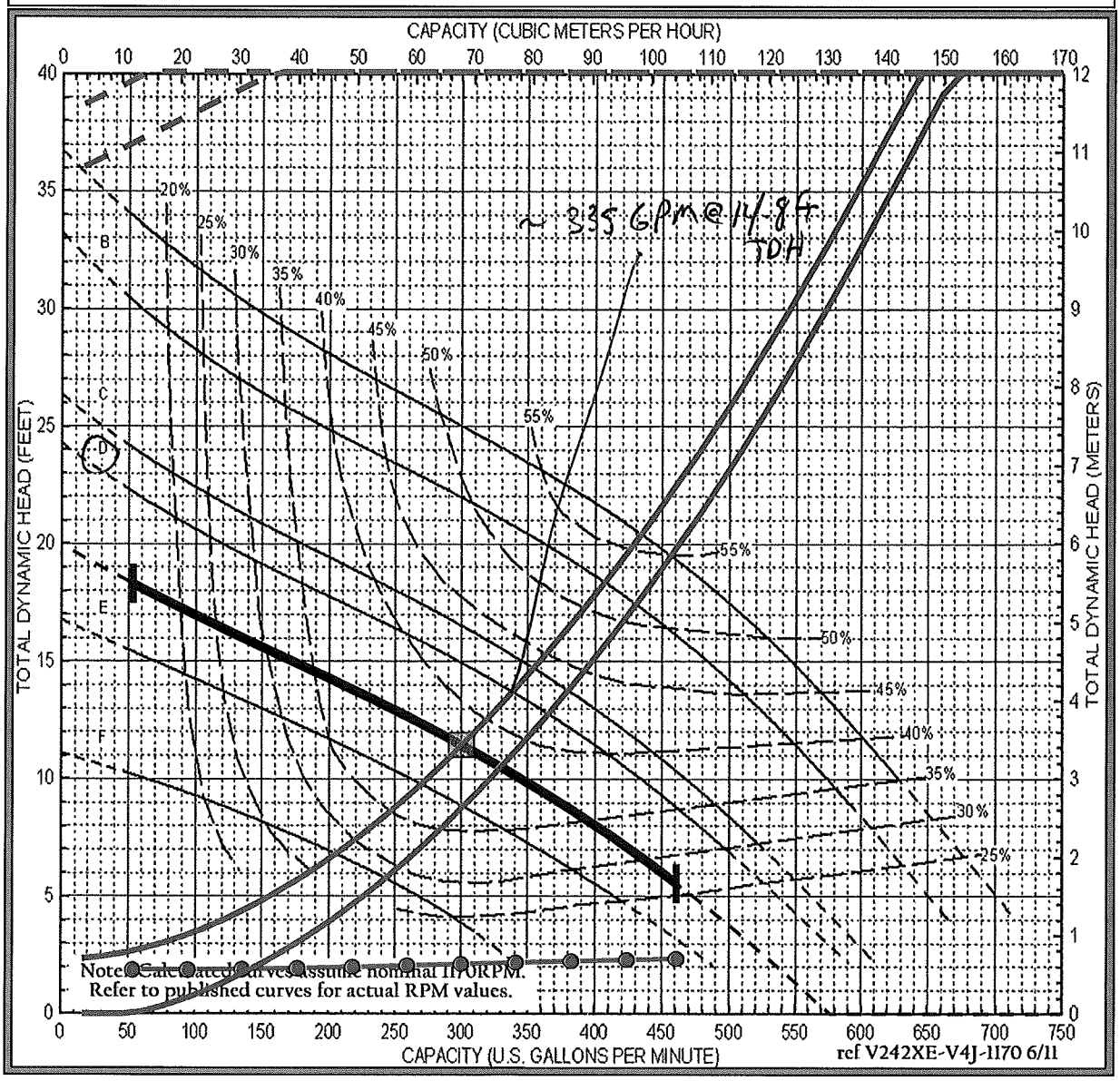

NOTE: INFORMATION PROVIDED IS TO BE USED AS A GUIDELINE ONLY - REFER TO PUBLISHED CURVE TO CONFIRM PERFORMANCE, EFFICIENCY, & HORSEPOWER. FINAL PUMP SELECTION SHALL BE VERIFIED BY PROJECT ENGINEER.

Vaughan Company, Inc. 364 Monte-Elma Road Montesano, WA 98563
(360) 249-4042

Vaughan

Project: Golden Sands Dairy - W mister tank
Entered By: Carl Edem

CURVE	DIAMETER	HP
A	8.9	5
B	8.6	5
C	8	5
D	7.9	5
E	7	5
F	6.3	5

Capacity (GPM) 300 — M^3/HR 68.1

TDH (Feet) 8.7 — METERS 2.7

Maximum impeller diameter	8.90			
Trim Diameter	6.98	-21.6 % of full diameter		
Est. Efficiency at Operating Point	0.0	%		
Estim HP at Operating Point	0.0	HP	0.00	KW
Max HP at Given RPM / Solid Portion	0.0	HP	0.00	KW
Maximum HP corresponds to		GPM	0.00	M^3/HR

Refer to published curves for specific RPM values. HP and EFF values are calculated approximate values and listed for supplemental info only.

Pump Model **E4K**

Type of Friction Calc Used *WATER* C

Nominal Motor RPM **1170**

Pump curve — System Curve (water) — System curve (sludge)
HP required — Operating Point ***(Note: HP & system curve plotted vs FEET scale)***

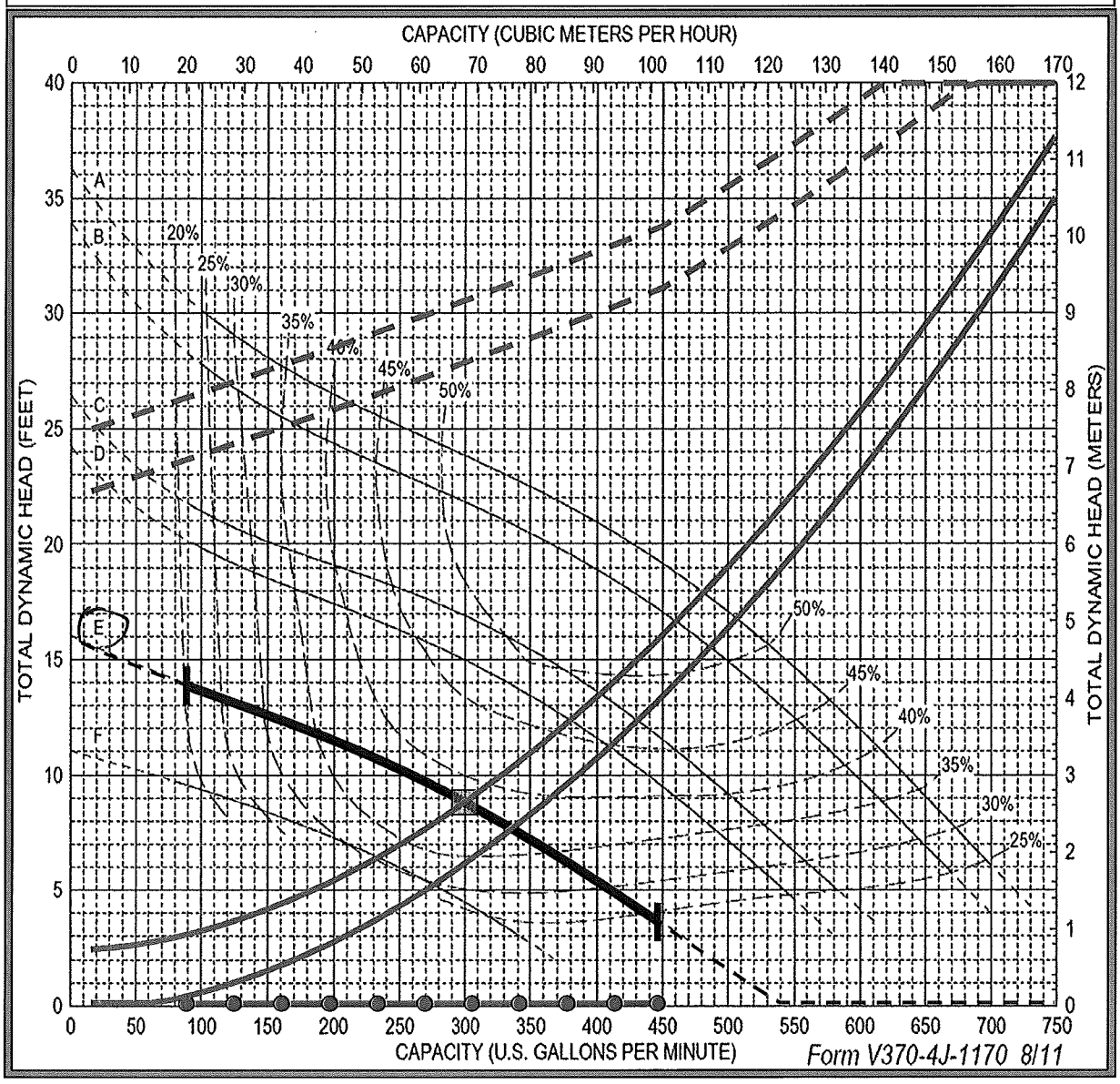

Form V370-4J-1170 8/11

NOTE: INFORMATION PROVIDED IS TO BE USED AS A GUIDELINE ONLY - REFER TO PUBLISHED CURVE TO CONFIRM PERFORMANCE, EFFICIENCY, & HORSEPOWER. FINAL PUMP SELECTION SHALL BE VERIFIED BY PROJECT ENGINEER.

Vaughan Company, Inc. 364 Monte-Elma Road Montesano, WA 98563
(360) 249-4042

Vaughan

Project: Golden Sands Dairy - NW mister tank
Entered By: Carl Edem

CURVE	DIAMETER	HP
A	8.9	5
B	8.6	5
C	8	5
D	7.8	5
E	7	5
F	6.3	5

Capacity (GPM) 300 — M^3/HR 68.1

TDH (Feet) 6.7 — METERS 2.0

Maximum impeller diameter	8.90			
Trim Diameter	6.67	-25.1 % of full diameter		
Est. Efficiency at Operating Point	32.3	%		
Estim HP at Operating Point	1.6	HP	1.17	KW
Max HP at Given RPM / Solid Portion	1.7	HP	1.25	KW
Maximum HP corresponds to	371	GPM	84.21	M^3/HR

Refer to published curves for specific RPM values. HP and EFF values are calculated approximate values and listed for supplemental info only.

Pump Model **V4K**

Type of Friction Calc Used *WATER* C

Nominal Motor RPM **1170**

Pump curve — System Curve (water) — System curve (sludge)
HP required — Operating Point ***(Note: HP & system curve plotted vs FEET scale)***

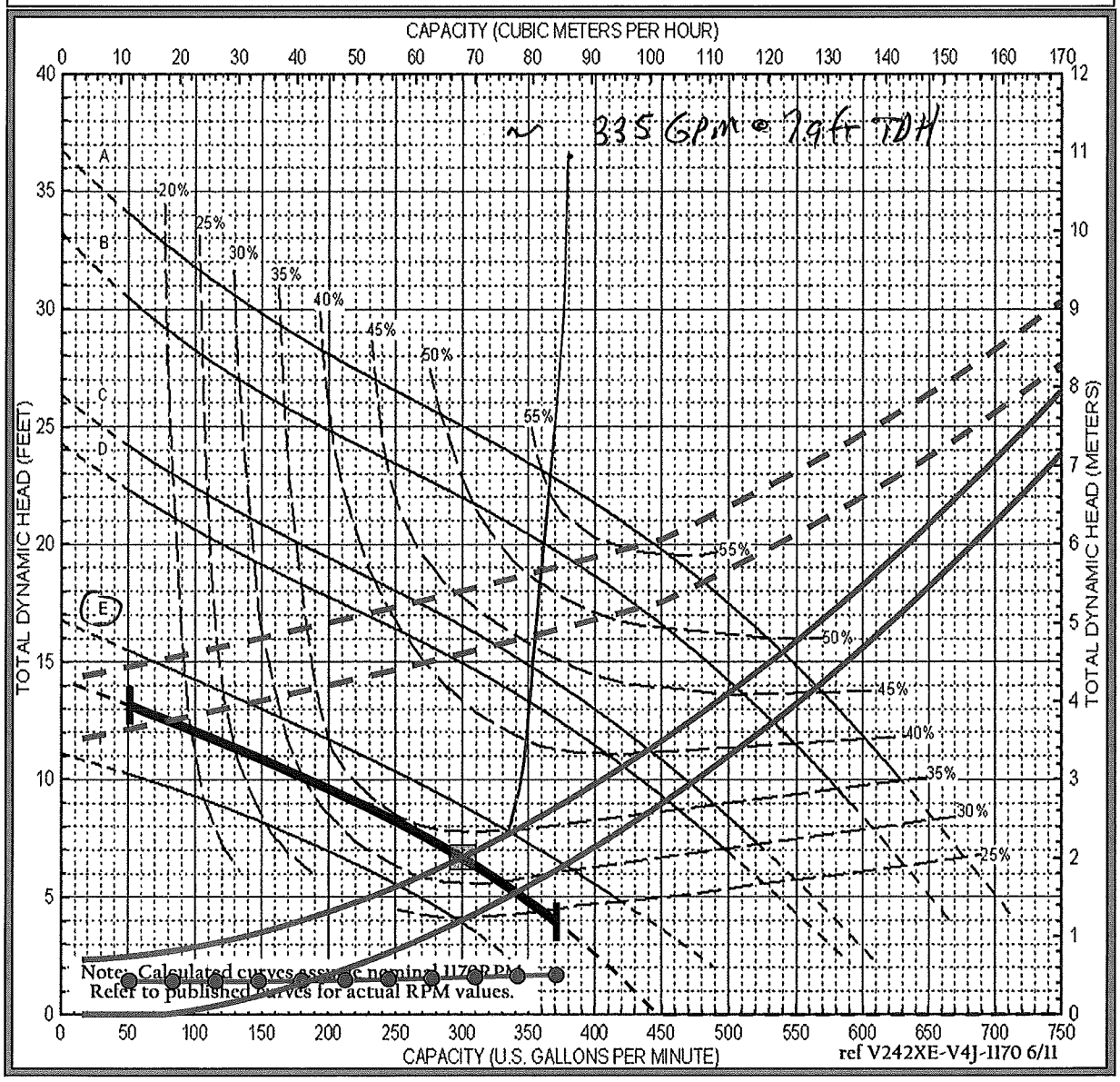

NOTE: INFORMATION PROVIDED IS TO BE USED AS A GUIDELINE ONLY - REFER TO PUBLISHED CURVE TO CONFIRM PERFORMANCE, EFFICIENCY, & HORSEPOWER. FINAL PUMP SELECTION SHALL BE VERIFIED BY PROJECT ENGINEER.

Vaughan Company, Inc. 364 Monte-Elma Road Montesano, WA 98563
(360) 249-4042

Vaughan

Project: Golden Sands Dairy - separator building ← HOLDING AREA TANK
Entered By: Carl Edem

CURVE	DIAMETER	HP
A	11.8	25
B	11.5	25
C	11.3	25*
D	10.9	20
E	10.5	20**
F	10	15
G	9.4	10
H	9.2	10
I	8.8	7.5

Capacity (GPM) 800 — M^3/HR 181.7

TDH (Feet) 24.2 — METERS 7.4

Maximum impeller diameter	11.80			
Trim Diameter	9.27	-21.4 % of full diameter		
Est. Efficiency at Operating Point	59.1	%		
Estim HP at Operating Point	8.3	HP	6.17	KW
Max HP at Given RPM / Solid Portion	8.5	HP	6.32	KW
Maximum HP corresponds to	1293	GPM	293.53	M^3/HR

Refer to published curves for specific RPM values. HP and EFF values are calculated approximate values and listed for supplemental info only.

Pump Model **V6U**

Type of Friction Calc Used *WATER* C

Nominal Motor RPM **1170**

Pump curve — System Curve (water) — System curve (sludge)
HP required — Operating Point ***(Note: HP & system curve plotted vs FEET scale)***

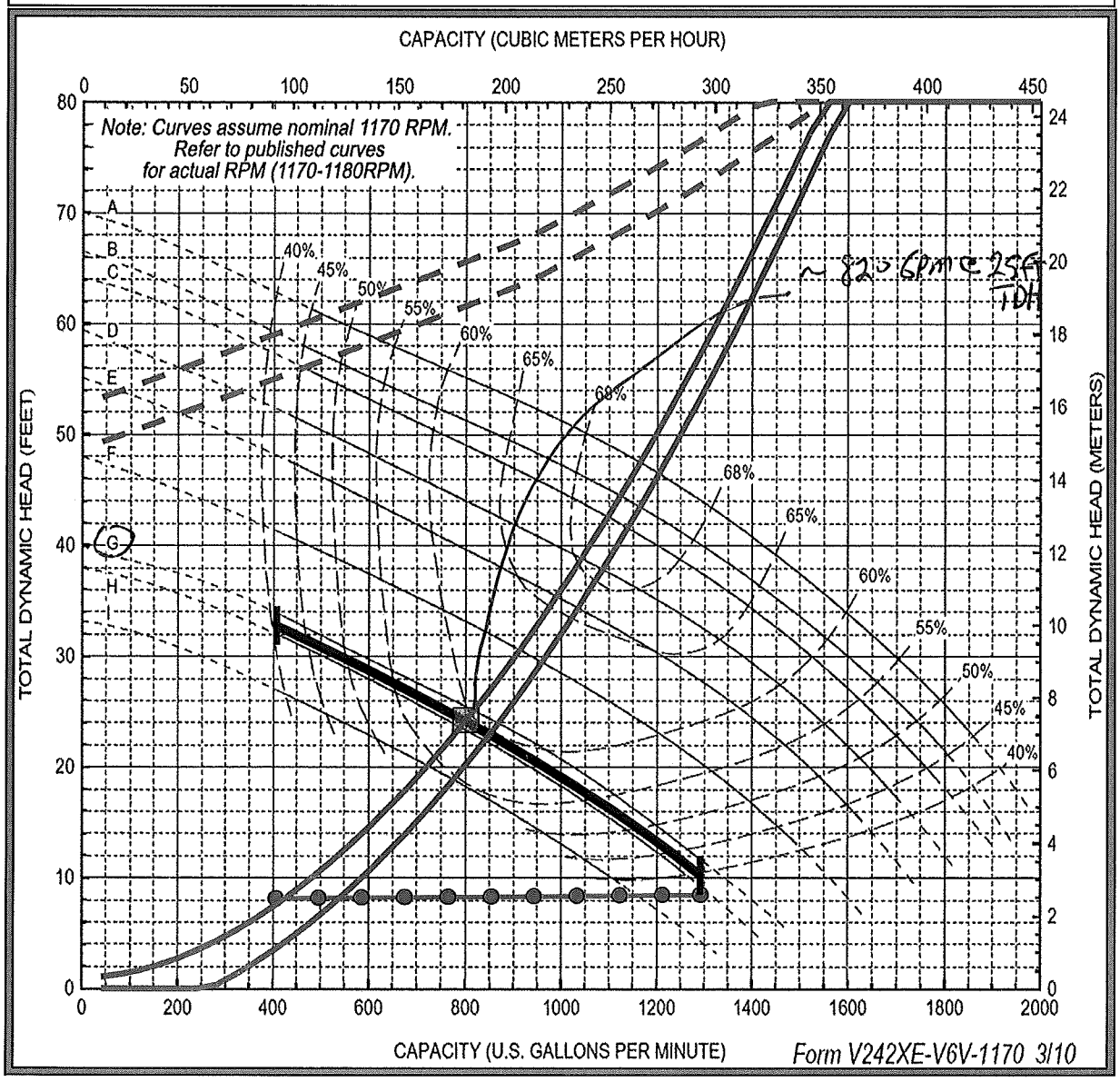

Form V242XE-V6V-1170 3/10

NOTE: INFORMATION PROVIDED IS TO BE USED AS A GUIDELINE ONLY - REFER TO PUBLISHED CURVE TO CONFIRM PERFORMANCE, EFFICIENCY, & HORSEPOWER. FINAL PUMP SELECTION SHALL BE VERIFIED BY PROJECT ENGINEER.

Vaughan Company, Inc. 364 Monte-Elma Road Montesano, WA 98563
(360) 249-4042

Vaughan

Project: Golden Sands Dairy - SE mister tank
Entered By: Carl Edem

CURVE	DIAMETER	HP
A	8.9	5
B	8.6	5
C	8	5
D	7.8	5
E	7	5
F	6.3	5

Capacity (GPM) 300 — M^3/HR 68.1

TDH (Feet) 13.8 — METERS 4.2

Maximum impeller diameter	8.90			
Trim Diameter	7.63	-14.3 % of full diameter		
Est. Efficiency at Operating Point	43.2	%		
Estim HP at Operating Point	2.4	HP	1.80	KW
Max HP at Given RPM / Solid Portion	2.6	HP	1.95	KW
Maximum HP corresponds to	496	GPM	112.61	M^3/HR

Refer to published curves for specific RPM values. HP and EFF values are calculated approximate values and listed for supplemental info only.

Pump Model **V4K**

Type of Friction Calc Used *WATER* C

Nominal Motor RPM **1170**

Pump curve — System Curve (water) — System curve (sludge)
HP required — Operating Point ***(Note: HP & system curve plotted vs FEET scale)***

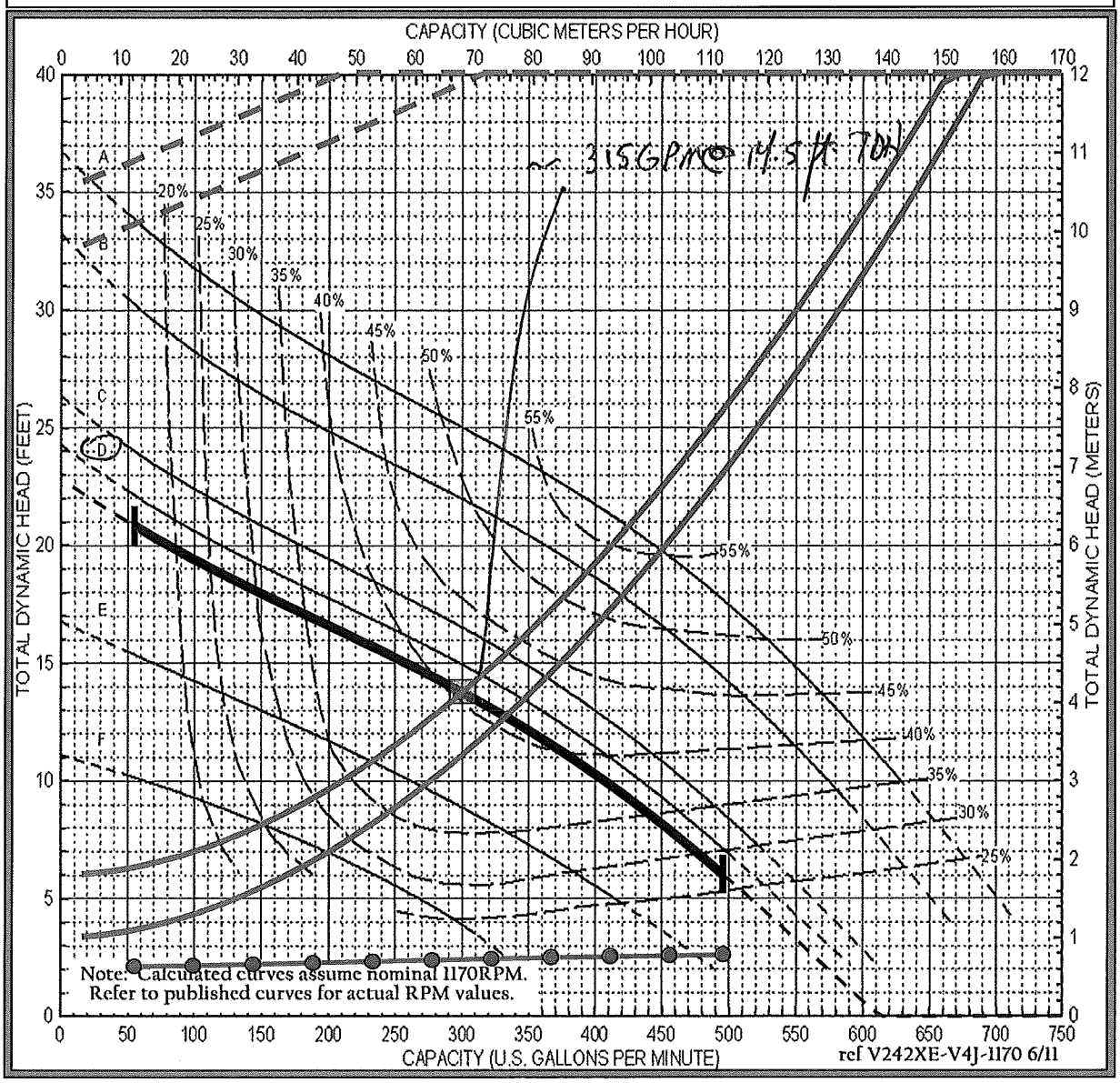

NOTE: INFORMATION PROVIDED IS TO BE USED AS A GUIDELINE ONLY - REFER TO PUBLISHED CURVE TO CONFIRM PERFORMANCE, EFFICIENCY, & HORSEPOWER. FINAL PUMP SELECTION SHALL BE VERIFIED BY PROJECT ENGINEER.

Vaughan

Project: Golden Sands Dairy - E mister tank
Entered By: Carl Edem

CURVE	DIAMETER	HP
A	8.9	5
B	8.6	5
C	8	5
D	7.8	5
E	7	5
F	6.3	5

Capacity (GPM) 300 — M^3/HR 68.1

TDH (Feet) 15.0 — METERS 4.6

Maximum impeller diameter	8.90			
Trim Diameter	7.81	-12.2 % of full diameter		
Est. Efficiency at Operating Point	43.8	%		
Estim HP at Operating Point	2.6	HP	1.94	KW
Max HP at Given RPM / Solid Portion	2.8	HP	2.08	KW
Maximum HP corresponds to	516	GPM	117.24	M^3/HR

Refer to published curves for specific RPM values. HP and EFF values are calculated approximate values and listed for supplemental info only.

Pump Model **V4K**

Type of Friction Calc Used ***WATER*** C

Nominal Motor RPM **1170**

Pump curve — System Curve (water) — System curve (sludge)
HP required — Operating Point ***(Note: HP & system curve plotted vs FEET scale)***

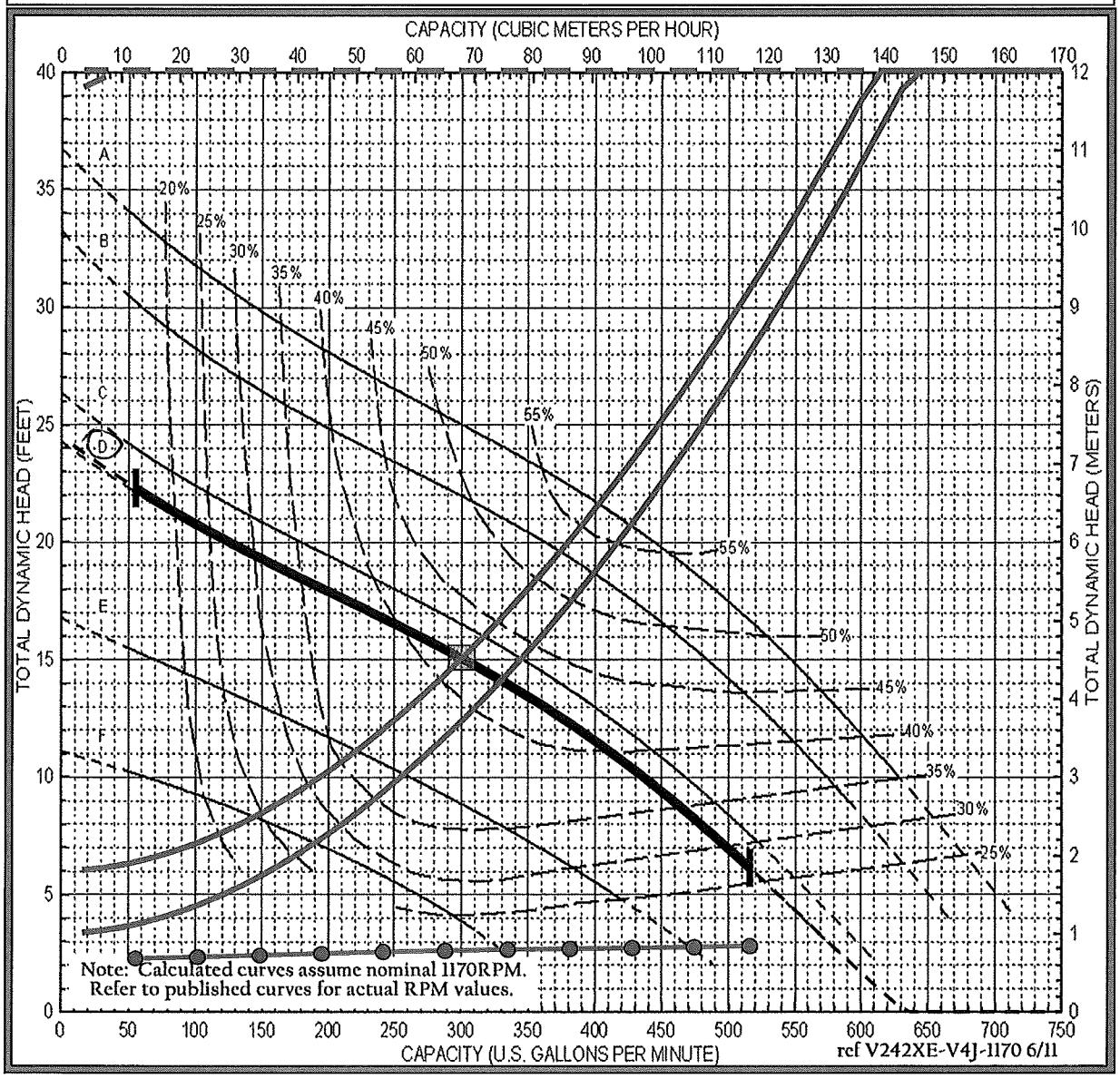

NOTE: INFORMATION PROVIDED IS TO BE USED AS A GUIDELINE ONLY - REFER TO PUBLISHED CURVE TO CONFIRM PERFORMANCE, EFFICIENCY, & HORSEPOWER. FINAL PUMP SELECTION SHALL BE VERIFIED BY PROJECT ENGINEER.

Vaughan Company, Inc. 364 Monte-Elma Road Montesano, WA 98563
(360) 249-4042

Vaughan

Project: Golden Sands Dairy - NE mister tank
Entered By: Carl Edem

CURVE	DIAMETER	HP
A	8.9	5
B	8.6	5
C	8	5
D	7.8	5
E	7	5
F	6.3	5

Capacity (GPM) 300 — M^3/HR 68.1

TDH (Feet) 17.6 — METERS 5.4

Maximum impeller diameter	8.90			
Trim Diameter	8.11	-8.9 % of full diameter		
Est. Efficiency at Operating Point	45.2	%		
Estim HP at Operating Point	2.9	HP	2.19	KW
Max HP at Given RPM / Solid Portion	3.3	HP	2.49	KW
Maximum HP corresponds to	551	GPM	125.13	M^3/HR

Refer to published curves for specific RPM values. HP and EFF values are calculated approximate values and listed for supplemental info only.

Pump Model **V4K**

Type of Friction Calc Used *WATER* C

Nominal Motor RPM **1170**

Pump curve — System Curve (water) — System curve (sludge)
HP required — Operating Point ***(Note: HP & system curve plotted vs FEET scale)***

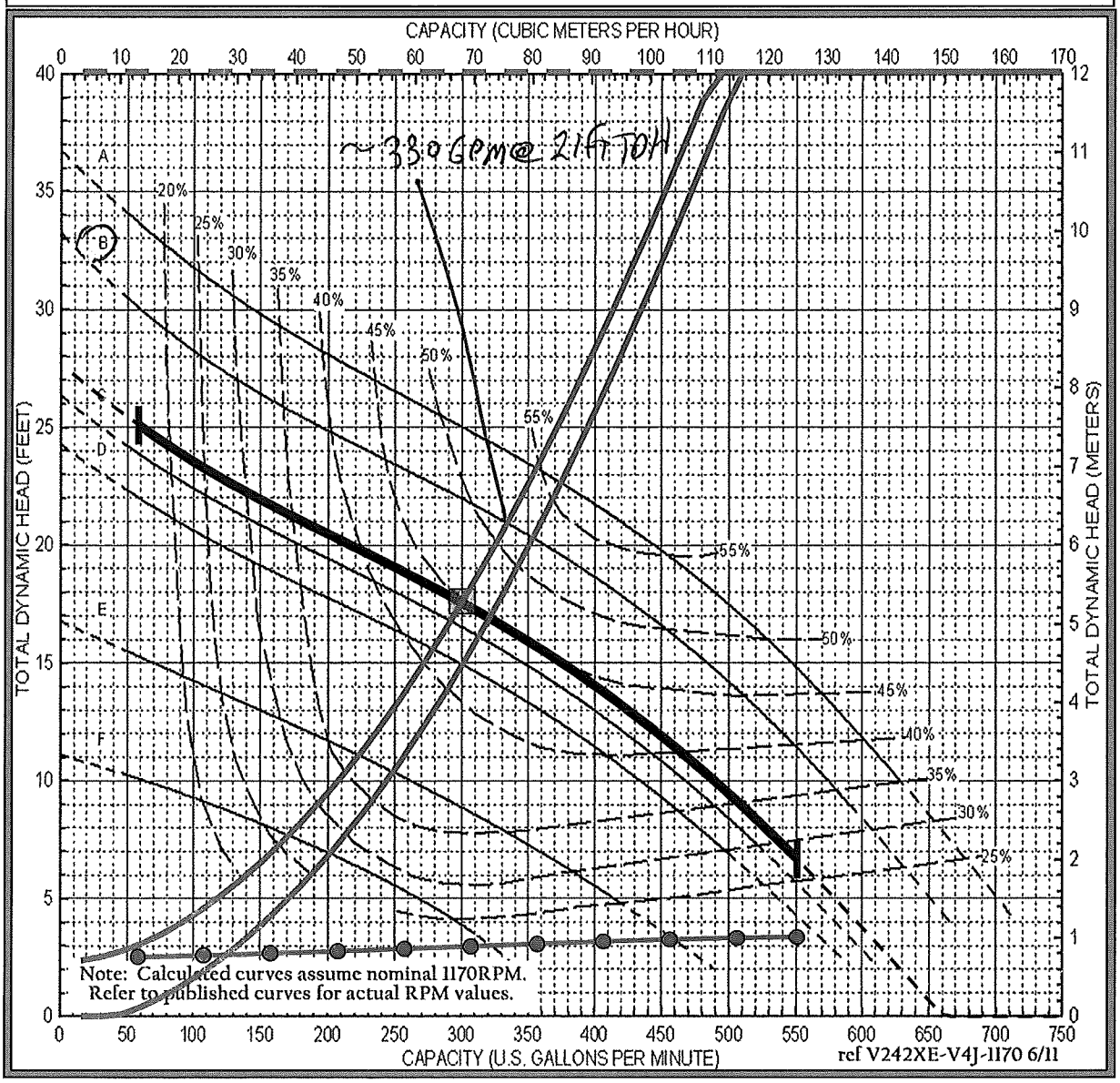

NOTE: INFORMATION PROVIDED IS TO BE USED AS A GUIDELINE ONLY - REFER TO PUBLISHED CURVE TO CONFIRM PERFORMANCE, EFFICIENCY, & HORSEPOWER. FINAL PUMP SELECTION SHALL BE VERIFIED BY PROJECT ENGINEER.

Vaughan Company, Inc. 364 Monte-Elma Road Montesano, WA 98563
(360) 249-4042

Vaughan

Project: Golden Sands Dairy - separator effluent
Entered By: Carl Edem

CURVE	DIAMETER	HP
A	8.9	5
B	8.6	5
C	8	5
D	7.8	5
E	7	5
F	6.3	5

Capacity (GPM) 300 — M^3/HR 68.1

TDH (Feet) 18.5 — METERS 5.6

Maximum impeller diameter	8.90			
Trim Diameter	8.21	-7.8 % of full diameter		
Est. Efficiency at Operating Point	46.2	%		
Estim HP at Operating Point	3.0	HP	2.25	KW
Max HP at Given RPM / Solid Portion	3.5	HP	2.59	KW
Maximum HP corresponds to	561	GPM	127.40	M^3/HR

Refer to published curves for specific RPM values. HP and EFF values are calculated approximate values and listed for supplemental info only.

Pump Model **V4K**

Type of Friction Calc Used *WATER* C

Nominal Motor RPM **1170**

Pump curve — System Curve (water) — System curve (sludge)
HP required — Operating Point ***(Note: HP & system curve plotted vs FEET scale)***

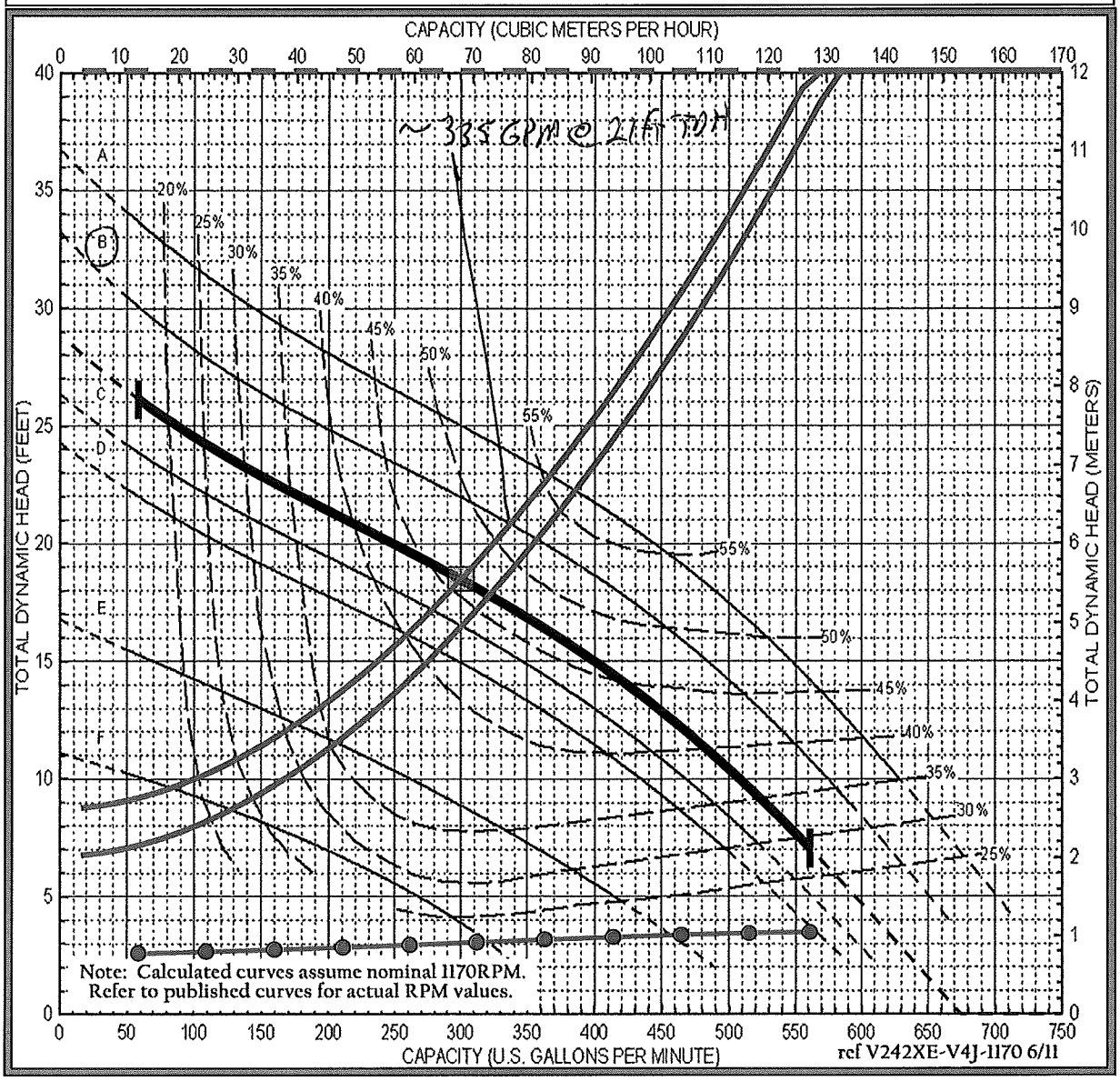

NOTE: INFORMATION PROVIDED IS TO BE USED AS A GUIDELINE ONLY - REFER TO PUBLISHED CURVE TO CONFIRM PERFORMANCE, EFFICIENCY, & HORSEPOWER. FINAL PUMP SELECTION SHALL BE VERIFIED BY PROJECT ENGINEER.

Vaughan Company, Inc. 364 Monte-Elma Road Montesano, WA 98563
(360) 249-4042

Vaughan

Project: Golden Sands Dairy - main pump - low flow
Entered By: Carl Edem

CURVE	DIAMETER	HP
A	8.9	5
B	8.6	5
C	8	5
D	7.8	5
E	7	5
F	6.3	5

Capacity (GPM) 100 — M^3/HR 22.7

TDH (Feet) 14.8 — METERS 4.5

Maximum impeller diameter	8.90			
Trim Diameter	7.06	-20.7 % of full diameter		
Est. Efficiency at Operating Point	22.8	%		
Estim HP at Operating Point	1.6	HP	1.22	KW
Max HP at Given RPM / Solid Portion	2.1	HP	1.57	KW
Maximum HP corresponds to	432	GPM	98.05	M^3/HR

Refer to published curves for specific RPM values. HP and EFF values are calculated approximate values and listed for supplemental info only.

Pump Model **V4K**

Type of Friction Calc Used *WATER* C

Nominal Motor RPM **1170**

Pump curve — System Curve (water) — System curve (sludge)
HP required — Operating Point ***(Note: HP & system curve plotted vs FEET scale)***

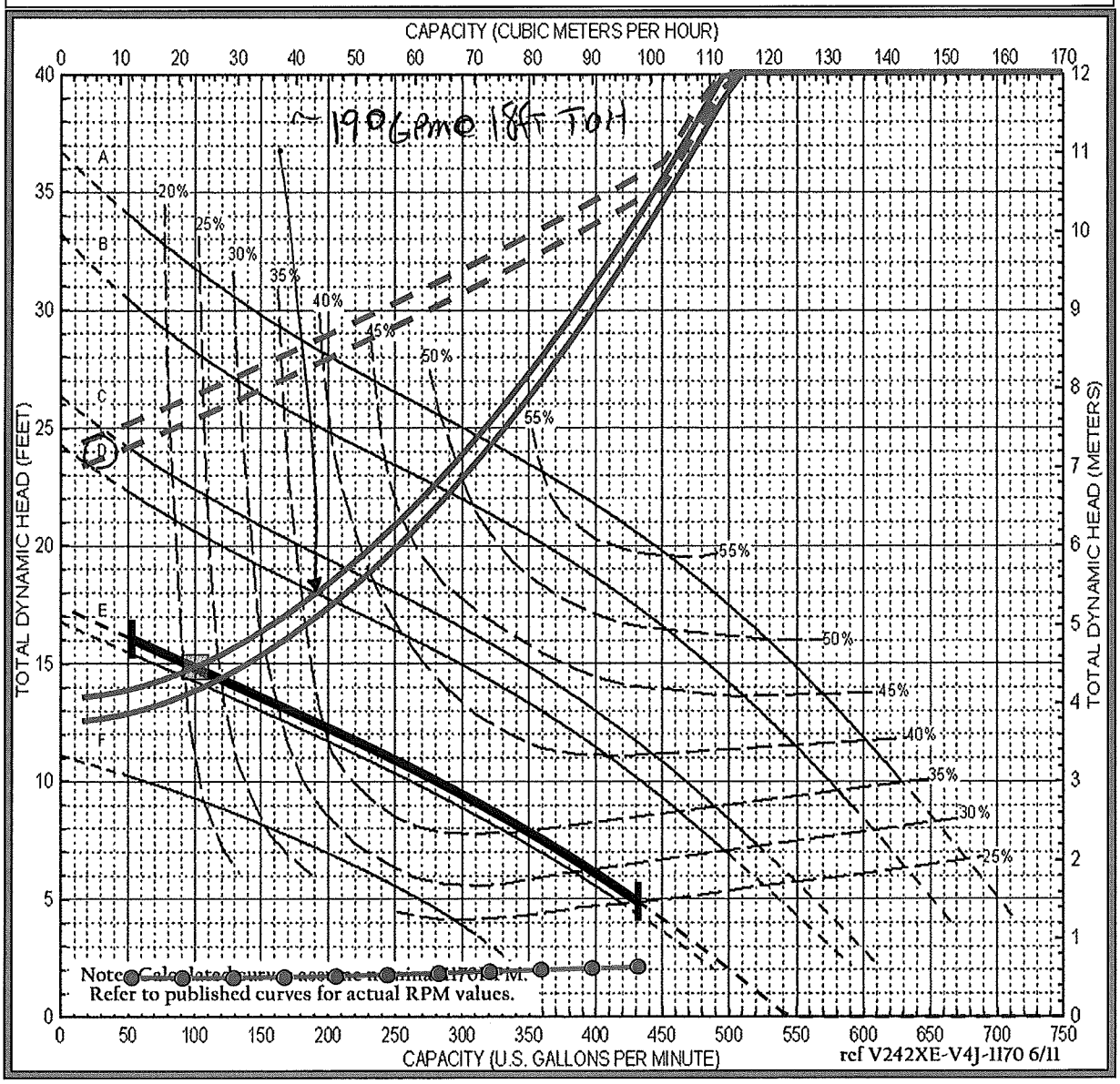

NOTE: INFORMATION PROVIDED IS TO BE USED AS A GUIDELINE ONLY - REFER TO PUBLISHED CURVE TO CONFIRM PERFORMANCE, EFFICIENCY, & HORSEPOWER. FINAL PUMP SELECTION SHALL BE VERIFIED BY PROJECT ENGINEER.

Vaughan Company, Inc. 364 Monte-Elma Road Montesano, WA 98563
(360) 249-4042

Vaughan

Project: Golden Sands Dairy -secondary pump-high flow
Entered By: Carl Edem

CURVE	DIAMETER	HP
A	11.8	15
B	11.3	15
C	10.6	10
D	10	7.5
E	9.5	7.5
F	8.8	5

Capacity (GPM) 500 — M^3/HR 113.6

TDH (Feet) 23.4 — METERS 7.1

Maximum impeller diameter	11.80			
Trim Diameter	9.52	-19.3 % of full diameter		
Est. Efficiency at Operating Point	56.4	%		
Estim HP at Operating Point	5.3	HP	3.92	KW
Max HP at Given RPM / Solid Portion	5.6	HP	4.21	KW
Maximum HP corresponds to	778	GPM	176.70	M^3/HR

Refer to published curves for specific RPM values. HP and EFF values are calculated approximate values and listed for supplemental info only.

Pump Model **V4P**

Type of Friction Calc Used *WATER* C

Nominal Motor RPM **1170**

Pump curve — System Curve (water) — System curve (sludge)
HP required — Operating Point ***(Note: HP & system curve plotted vs FEET scale)***

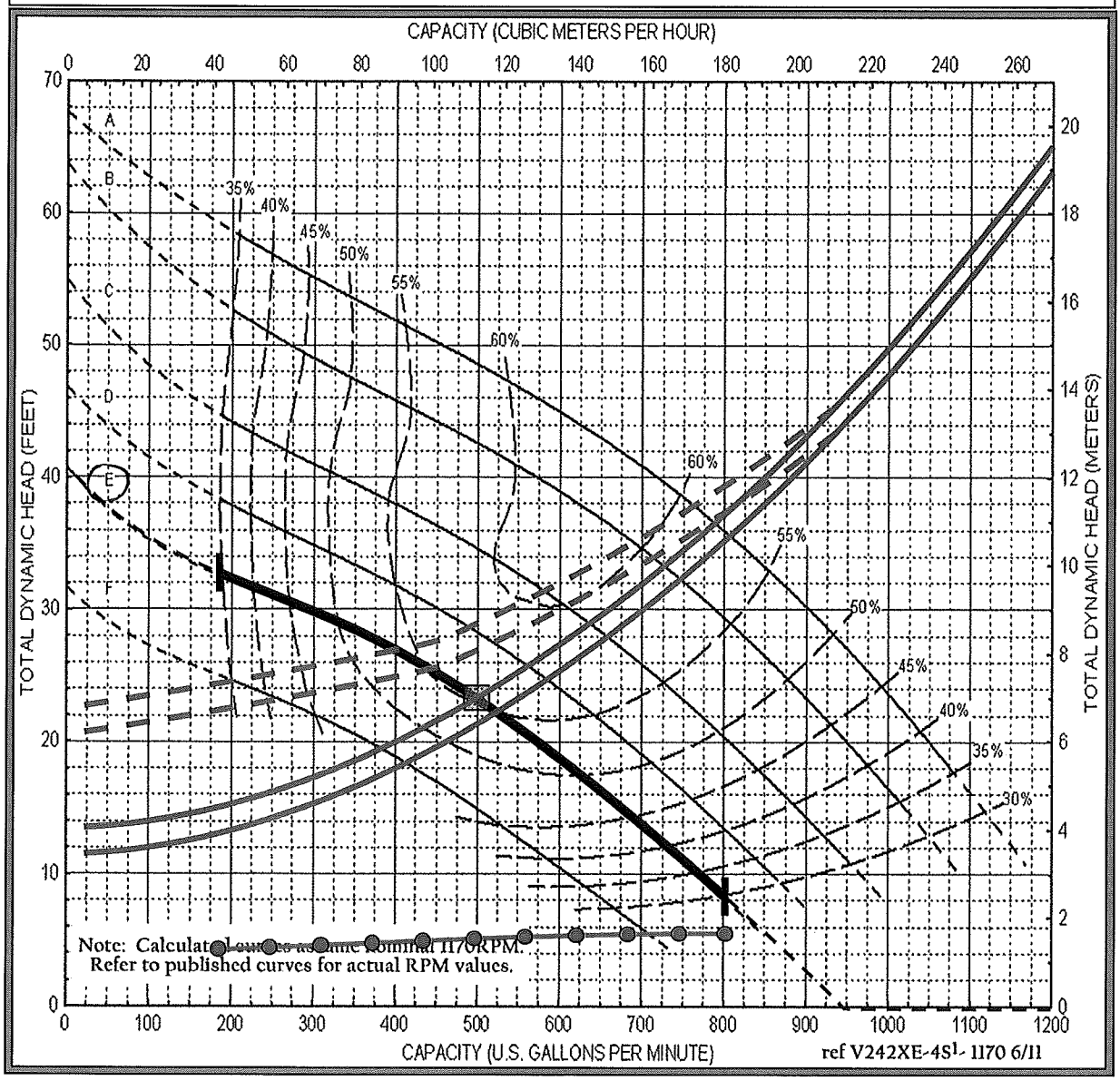

NOTE: INFORMATION PROVIDED IS TO BE USED AS A GUIDELINE ONLY - REFER TO PUBLISHED CURVE TO CONFIRM PERFORMANCE, EFFICIENCY, & HORSEPOWER. FINAL PUMP SELECTION SHALL BE VERIFIED BY PROJECT ENGINEER.

Vaughan Company, Inc. 364 Monte-Elma Road Montesano, WA 98563
(360) 249-4042

Vaughan

Project: Golden Sands Dairy - flush long parlor
Entered By: Carl Edem

CURVE	DIAMETER	HP
A	16	100
B	15.7	100
C	15	100
D	14.5	75
E	13.9	60
F	12.7	50
G	12.1	40
H	11	30
I	10.7	25

Capacity (GPM) 2500 — M^3/HR 567.8

TDH (Feet) 34.2 — METERS 10.4

Maximum impeller diameter	16.00			
Trim Diameter	12.08	-24.5 % of full diameter		
Est. Efficiency at Operating Point	60.3	%		
Estim HP at Operating Point	35.9	HP	26.74	KW
Max HP at Given RPM / Solid Portion	36.6	HP	27.32	KW
Maximum HP corresponds to	3058	GPM	694.40	M^3/HR

Refer to published curves for specific RPM values. HP and EFF values are calculated approximate values and listed for supplemental info only.

Pump Model **V8N2**

Type of Friction Calc Used *WATER* C

Nominal Motor RPM **1170**

Pump curve — System Curve (water) — System curve (sludge)
HP required — Operating Point ***(Note: HP & system curve plotted vs FEET scale)***

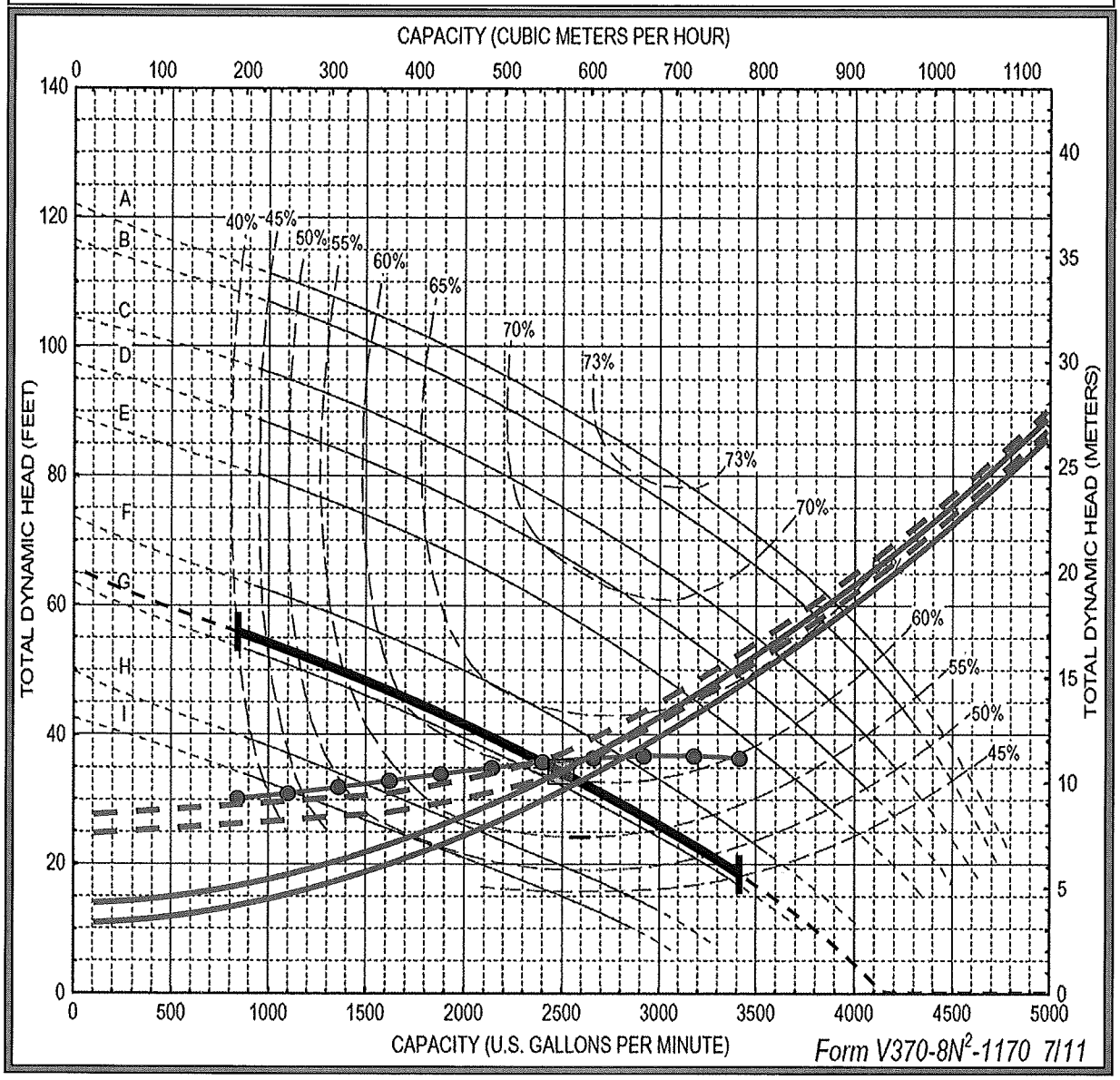

Form V370-8N²-1170 7/11

NOTE: INFORMATION PROVIDED IS TO BE USED AS A GUIDELINE ONLY - REFER TO PUBLISHED CURVE TO CONFIRM PERFORMANCE, EFFICIENCY, & HORSEPOWER. FINAL PUMP SELECTION SHALL BE VERIFIED BY PROJECT ENGINEER.

Vaughan Company, Inc. 364 Monte-Elma Road Montesano, WA 98563
(360) 249-4042

Natural Resources Conservation Service
United States Department of Agriculture

Culvert Evaluation

Participant:

Location:

County: County,

Designer:
Date: 01/25/2014

Checker: _____
Date: _____

Hydraulics Formula, Version 2.2.1

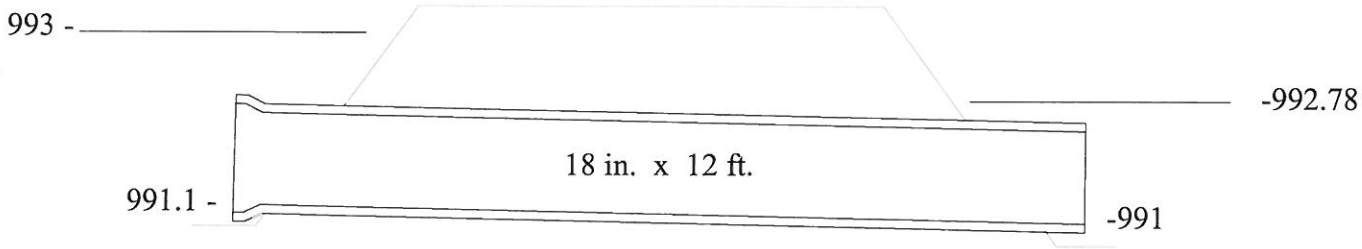

Pipe C
Leachate Pipe

'n' value: 0.012
Length: 12 ft.
Diameter: 18 in.
Projecting - groove edge ; Ke = .25

Capacity = 5.5 cfs
2488 gpm
Outlet Controls Flow

Elevation of Headwater: 993
Elevation of Inlet: 991.1
Elevation of Tailwater: 992.78
Elevation of Outlet: 991

Natural Resources Conservation Service
United States Department of Agriculture

Pipe Flow Formula Solution

Participant:

Location:

County: County,

Designer:
Date: 09/26/2013

Checker: _____
Date: _____

Hydraulics Formula, Version 2.2.1

Mannings Coefficient (n): 0.012
Entrance Coefficient (Ke): 0.9
Diameter of Pipe: 12 in.
Head on Pipe: 1 ft.
Length of Pipe: 40 ft.

Pipe Capacity: 3.7 cfs = 1660 gpm
Pipe Velocity: 4.7 ft/sec

Friction Coefficient (Kp): 0.0267
Max allocable fall in pipe when
outlet is not submerged: 0.4 ft.

Pipe O
to WSF 2 pump station

Natural Resources Conservation Service
United States Department of Agriculture

Pipe Flow Formula Solution

Participant:

Location:

County: County,

Designer:
Date: 09/26/2013

Checker: _____
Date: _____

Hydraulics Formula, Version 2.2.1

Mannings Coefficient (n): 0.012
Entrance Coefficient (Ke): 0.9
Diameter of Pipe: 12 in.
Head on Pipe: .1 ft.
Length of Pipe: 40 ft.

Pipe Capacity: 1.2 cfs = 538 gpm
Pipe Velocity: 1.5 ft/sec

Friction Coefficient (Kp): 0.0267
Max allocable fall in pipe when
outlet is not submerged: 0.0 ft.

Pipe P + Q

Pipes b/w WSF1 + WSF2

Appendix F – NRCS Conservation Practice Standards

WASTE STORAGE FACILITY

(No.)
Code 313

Natural Resources Conservation Service
Conservation Practice Standard

I. Definition

A waste storage *impoundment*[1] made by constructing an embankment and/or excavating a pit or dugout, or by fabricating a *structure*.

II. Purpose

To temporarily store wastes such as manure, *manure processing derivatives*, *leachate*, *wastewater*, and *contaminated runoff* from agricultural sources in a manner which safeguards the environment.

This standard does not preclude the addition of other off farm organic materials, pending approval by the appropriate regulatory authority.

III. Conditions Where Practice Applies

This standard applies to:

- waste storage impoundments or structures up to 30 million gallons in size;
- construction of a storage facility in areas where the soils, geography, and topography are suitable and where the construction, operation, and maintenance will protect the soil and water resources;
- facilities that are part of a planned agriculture waste management system intended to meet the facility management goals, regulatory requirements, or *nutrient management plans* by providing storage of waste;
- waste storage facilities utilizing embankments with a maximum *effective height* of 25 feet and where damage resulting from failure would be limited.

This standard does not apply to the storage of human waste or the unstacked waste that accumulates in animal housing units.

IV. Federal, Tribal, State and Local Laws

Waste storage facilities shall comply with all federal, tribal, state, and local laws, rules or regulations. The operator is responsible for securing required permits. This standard does not contain the text of the federal, tribal, state, or local laws governing waste storage facilities.

V. Criteria

The following criteria establish **minimum** allowable limits for design parameters, acceptable installation processes, or performance requirements.

A. General Criteria

The following general criteria apply to this practice.

1. Management Assessment

A management assessment shall be conducted, documented, and incorporated into the design. The assessment shall be performed with the owner/operator to explore options and to determine the purpose of storage components, available resources, manure disposal schemes, sand and manure solids separation methods, and waste characteristics.

When the intent of the owner/operator is to process and/or treat the various waste streams within the *animal production area*, the designer shall provide a narrative describing the system. The description will include the intent and purpose of the treatment or processing strategies relative to land spreading or waste distribution strategies, stabilization of organic by-products, separation of sand bedding, reducing pollutant loads, nutrient concentration, waste consistencies, odor control, energy production, and volume reduction.

The management assessment shall address the following as appropriate to the system being designed:

a. Waste Characterization.

1) Sources, volumes and consistency of manure, contaminated runoff, manure processing derivatives, leachate,

[1]Words in the standard that are shown in italics are described in VIII. Definitions. The words are italicized the first time they are used in the text.

wastewater, and other inputs to the waste storage facility.

2) Animal types.

3) Bedding types and quantity.

b. Land base available for utilization of waste.

c. Planned storage period.

d. Waste handling and transfer methods from the waste source to the storage facility.

e. Facility waste removal methods.

f. Storage facility liner possibilities and preferences.

g. Access needs and limitations.

h. Safety needs, including those to address the hazards of manure gases.

i. Labor and equipment needs.

j. Potential odor concerns.

k. Provisions for facility expansion.

2. Site Assessment

A site assessment shall be conducted, documented, and incorporated into the design. The assessment shall be performed to determine physical site characteristics that will influence the placement, construction, maintenance, and environmental integrity of a proposed waste storage facility and transfer components. The assessment shall include input from the owner/operator. The site assessment shall include:

a. Locations and elevations of buildings, roads, lanes, soil test pits, property lines, setbacks, easements, wells, springs, floodplains, surface waters, surface drains, drain tile, utilities, overhead lines, *cultural resources*, and wetlands.

b. Test pit or soil boring logs, soil test results, a soil survey photo, and a narrative describing the design parameters that have been derived from the soils data. Test pit soil or boring criteria include:

1) The number and distribution needed to characterize the subsurface (soils, saturation, and *bedrock*). Test pits or borings shall be added if there is inconsistency within or between test pits or borings.

2) Based on the facility *footprint* there shall be a minimum of one test pit or boring per 15,000 square feet of footprint, with a minimum of two per facility. Test pits and borings used to meet these criteria shall be located in the footprint or no more than 100 feet from the footprint. These test pits/soil borings shall extend to bedrock, a free water surface, or to a minimum depth to ensure subsurface saturation and bedrock separation distances required in this standard are achieved.

3) Soil layers shall be described with respect to thickness, texture using the Unified Soil Classification System (USCS), Munsell color, presence and color of redoximorphic features (soil mottling), *gleyed soil* and moisture condition.

4) The elevation of bedrock and bedrock type, if encountered, such as sandstone, limestone, dolomite, or granite.

5) The upper elevation of all saturated layers encountered.

c. Locations of *sinkholes* and other *karst* features and direct conduits to groundwater within 1,000 feet of the facility.

d. Locations, dimensions and elevations, soil volumes, soil samples, testing results, and reclamation plans of any borrow areas. Characterize borrow areas according to Section V.A.2.b.(1)), V.A.2.b.(3), and V.A.2.b.(4). Test pits for clay borrow source evaluation shall be completed on a maximum 100-foot grid.

e. Identification of potential impacts from failure of the embankments, liners, or structures.

3. Flood Prone Areas

Waste storage facilities located in *flood prone areas* shall be protected from inundation, structural damage, and instability. These facilities shall be designed to accommodate any additional loading resulting from static water

levels or saturated soils. The lowest point at which floodwater could enter the waste storage facility shall be 2 feet above the maximum elevation of flow resulting from a 100-year, 24-hour rainfall event.

4. Location

Waste storage facilities shall be located so the potential impacts from breach of embankment, accidental release, and liner failure are minimized. Potential failures and environmental impacts identified in the site assessment shall be addressed in the design phase, the operation and maintenance plan, and/or the emergency action plan.

5. Design Storage Volume

Design storage volumes shall be calculated with the procedures and default values found in the Wisconsin supplement to Chapter 10 of the NRCS Agricultural Waste Management Field Handbook (AWMFH) or site-specific estimates and measurements documented in the plan. The design storage duration and volume shall be consistent with the nutrient management plan and emptying schedule. Design volume shall include the sum of the following during the storage period:

- Manure, bedding and other wastes.
- The volume of wastewater from all sources that is anticipated to enter the storage facility. The wastewater volume shall be based on default values or estimates and measurements documented in the plan.
- Normal precipitation less evaporation on the surface of the facility.
- Runoff volumes from the drainage area for design storage duration.
- 25-year, 24-hour precipitation on the surface of the facility.
- 25-year, 24-hour runoff volume from the drainage area.

6. Maximum Operating Level

The maximum operating level for liquid or slurry waste storage facilities shall be the storage level that provides for the design storage volume listed in Section V.A.5 less the volume of precipitation and runoff from the 25-year, 24-hour storm event. See Figure 1.

A permanent marker or indicator that does not compromise the integrity of the liner shall be installed at the maximum operating level. The stored waste shall be managed such that it remains below the maximum operating level during normal operating conditions. State or local codes may require additional markers.

A contingency plan shall be implemented when the maximum operating level is reached.

7. Extra Depth for Safety

A minimum of one foot of depth shall be added to the design storage volume to reduce the risk of overtopping. This depth is not intended to add storage capacity. See Figure 1.

8. Remaining Waste and Sumps

An additional depth shall be added to the facility to accommodate the waste that cannot be routinely removed during emptying. A minimum of two feet shall be added to storage depth for facilities with side slopes and one foot for vertical walled facilities. The additional storage depth can be reduced if a sump is installed or other provisions to empty the facility have been made.

9. Separation from Subsurface Saturation or Bedrock

The separation is determined to be the closest distance from any point on the inside surface (bottom and sides) of the storage facility to the feature from which separation is required.

The definition of subsurface saturation is not intended for application in any context other than to protect structures installed from hydrostatic loadings.

a. For the purposes of this standard, factors used to identify subsurface saturation shall include observed saturation, gleyed soil, gray mottles, and soil color in conjunction with nearby surface water features. The highest subsurface saturation elevation in a test pit/soil boring will be identified by any of the following soil properties.

   1) Free water or wet soil identified by glistening, due to the slow release of water.

2) Gleyed soil, that may extend uninterrupted from an observed free water surface.

3) The presence of distinct gray redoximorphic features with a chroma of 2 or less based on Munsell color charts.

4) Depleted matrices having a value of 4 or more and chroma 2 or less based on Munsell color charts. In some cases soil parent materials have a natural color of 2 chroma or less or gleyed color that is not due to saturation. In these cases other indicators may be used: landscape position, elevation or soils in relation to nearby water features.

b. In soils not conducive to mottling, such as sand, the subsurface saturation elevation shall be established by evaluating the soil morphology of the soil profile. Other indicators that may be considered in making the determination are the position of the soil in the landscape, topography, nearby wetlands and well construction logs.

c. Subsurface saturation, if encountered shall not be drained (or have water-bearing layers removed) except as described for *perched conditions*. Perched conditions may be drained or water-bearing materials removed to achieve separation distances in the tables and relieve hydrostatic loads on the facility. Documentation to demonstrate that subsurface saturation is perched and of drainable extent or its effects otherwise eliminated shall be included in the site assessment. All *drainage systems* shall drain by gravity. The effect of temporary tailwater on the structure or liner and the effects of outletting to perennial and intermittent waterways shall be evaluated. A drainage system shall be located around the outside perimeter of the facility footprint and drain to a surface outlet. A drainage system may also be located around the outside perimeter of an impoundment floor within the facility footprint if the drainage system outlets to a manhole that can be monitored for liquid level, and pumped if needed to remove liquids.

d. If the site assessment indicates artesian features, a hydrogeologic and geotechnical evaluation of the site shall be completed to determine the site suitability for an in-ground waste storage facility.

e. Excavation of bedrock is permitted to achieve the required separation distance as specified in the tables. Bedrock shall not be removed by blasting. The exposed bedrock surface shall be evaluated to ensure a structurally sound base for liner or other soil material. Fractures or voids shall be treated to prevent migration of soil material. The surface of excavated bedrock shall have a positive grade, minimum of 1 percent, under and away from the storage facility, as to prevent any significant ponding on the rock surface. If bedrock is excavated, the material placed between the liner and the bedrock shall have a minimum of 20% passing the #200 sieve.

10. Safety Design

Safety design shall identify and minimize the hazards to animals and people. In particular, waste storage facility designs may create *confined spaces*, which may pose significant hazards in terms of the inhalation of poisonous gases, asphyxiation, or explosion. At a minimum, safety design shall include the following.

a. Warning signs, fences, ladders, ropes, rails, and other devices shall be provided, as appropriate. A fence is required unless the waste storage facility has vertical walls 5 feet above the ground surface or the waste storage facility has a cover that will support foot traffic. Fences shall discourage passage of livestock and people. The fence design needs to consider the production site conditions.

b. Safety stops, gates, or both installed at push-off ramps and load-out areas of impoundments and structures to prevent accidental entry of machinery.

c. Equipment access ramps and embankment slopes shall be compatible with the equipment intended to be used.

d. Confined spaces where human entry may occur shall be designed and operated in compliance with the provisions contained in ASABE EP470, Manure Storage Safety.

11. Engineering Design Documentation

Engineering design documentation shall be prepared in accordance with the criteria of this standard. The design documentation shall include:

- Management assessment,
- Site assessment,
- Operation and maintenance plan,
- Construction plan,
- Construction Quality Assurance Plan,
- Engineering computations, such as runoff, structural (unless using NRCS Standard Drawings), earthwork quantities, and volumetric computations for sizing of waste storage facility.

Documentation for siting temporary, unconfined stacks of manure and derivatives outside the animal production area shall include:

- Management assessment,
- Site assessment, and
- Location maps, soils maps, and USGS quadrangle maps.

12. Construction Plans and Specifications

Construction plans and specifications for materials and installation shall be prepared to serve as a basis for construction of the practice. Construction plans and specifications shall include, as applicable:

- Plan view of system layout.
- Minimum of two cross sections, perpendicular to each other, for each waste storage facility.
- Structural details of components sufficient to clearly show the construction requirements.
- Details for joining different liner types or new liners to existing liners.
- Locations, sizes, and type of pipelines and appurtenances, including a profile of the waste transfer system.
- Requirements for foundation preparation and treatment, including bedrock treatment.
- References to components supplied by others (pumps, etc.).
- Vegetative requirements.
- Surface Drainage/Grading plan.
- Subsurface drainage details.
- Location of soil test pits within 100 feet of the facility footprint on the plan view, and a summary of soil logs plotted on the cross sections or profile.
- Identification of borrow source location(s)
- Safety features, roof covers, fencing, ladders, and safety signs.
- Construction site erosion control practices
- Approximate location of utilities and notification requirements.
- Specifications for materials and installation.
- Signature of the person responsible for the design, their engineering seal, NRCS Job Approval or WDATCP Agricultural Engineering Practitioner Certification level, the date, and a statement attesting the plans meet the requirements of the WI FOTG 313 Conservation Practice Standard.
- Other site-specific information necessary to construct the waste storage facility.

13. Construction Quality Assurance Plan

A construction quality assurance plan is required that describes the type and frequency of testing, items requiring observation, and the documentation required. The plan shall be implemented by a person with NRCS Job Approval, WDATCP Agricultural Engineering Practitioner Certification, a Wisconsin registered professional engineer, or staff under the direction and control of the person holding the aforementioned credentials. The construction quality assurance plan shall address all the following items:

- Contact information and responsibilities of key parties (including owner, designer, construction observer, and contractor).
- Pre-construction meeting agenda items (including quality assurance plan, construction plans and specifications,

design change procedures, and critical project-specific items).

- Observation and construction verification (including items to be verified, sequencing, layout/staking, notification requirements, and onsite materials testing documentation).
- Items to be noted on as-built plans, job diary, and other certification (attesting) documentation.

14. Operation and Maintenance

An operation and maintenance plan shall be developed that is consistent with the purposes of this practice, intended life of the components, safety requirements, and the criteria for the design. At a minimum, the plan shall include:

a. A narrative describing the purpose of the system or structure and how it is intended to operate. This narrative should include design criteria such as number and type of animals, type of waste, type of bedding, days of storage, method for emptying, vehicle sizes intended to operate within or near the system and other pertinent operational information.

b. A requirement that waste be removed and utilized in accordance with Wisconsin NRCS Field Office Technical Guide, Section IV (WI FOTG), Standard 590, Nutrient Management.

c. Requirements for location and methods of waste removal in order to maintain liner integrity.

d. Requirements for monitoring the waste level relative to the permanent maximum operating level markers or indicators.

e. Requirements for inspecting and maintaining the structural components and mechanical systems.

f. A requirement to contact the appropriate regulatory authority for approval prior to storing any off-farm waste material in a waste storage facility that has been constructed using the criteria in this standard.

g. A contingency plan, which shall be implemented when the maximum operating level is reached. The contingency plan shall include how to handle unexpected volumes of wastewater and/or runoff that could cause the system to overflow before scheduled emptying can occur. The contingency plan shall provide for the safe disposition of waste.

h. An emergency response plan to deal with failures, spills, or overflows at the animal production area to minimize environmental impacts.

i. Safety issues and procedures/requirements connected with waste storage facilities, including confined spaces.

15. Seeding and Mulching

Disturbed areas and embankments shall be seeded and mulched in accordance with WI FOTG Standard 342, Critical Area Planting.

B. Specific Criteria for Waste Storage Impoundments and Structures

Waste Storage impoundments and structures shall be designed to contain all wastes until emptied and utilized in accordance with the Operation and Maintenance Plan. The storage facilities may be used alone or in combination to contain the various waste streams. There shall be no gravity outlets from the waste storage as a means of emptying the facility. Flow from an auxiliary spillway must discharge to secondary containment. Gravity flow between waste storage facilities is acceptable, however a secondary containment or additional storage capacity must be provided for the potential waste volume release. The following specific criteria apply to this practice:

1. Concrete Liners

Floors and slabs-used as a liner shall be designed for anticipated loads along with crack control and joint treatments stated below. Slabs on ground that will be subject to heavy truck or heavy equipment loads shall be designed in accordance with ACI 360, Guide to Design of Slabs-on-Ground and Concrete Floors on Ground, Chapter 5, Portland Cement Association (PCA).

a. Concrete with waterstop – The concrete shall contain distributed reinforcing steel, and all joints shall have embedded waterstop in accordance with Wisconsin FOTG Construction Specification 4, Concrete (Spec. 4).

A waterstop joint plan shall be included in the construction plans and contain the following: location of joints; cross-section details of joint(s); waterstop materials including factory fabricated corners, intersections, and transitions; installation specifications; and a quality assurance plan.

Construction quality assurance requirements for waterstop installation shall, at a minimum, include verification and documentation of the adequacy of the formwork, waterstop placement and welding prior to placement of the concrete, and continuous inspection during placement of concrete around embedded waterstop to ensure consolidation. The inspection shall be performed by a person under the direction and control of the individual responsible for approving the as-built construction plan. The person providing the inspection may not be an employee of the contractor or the owner.

A concrete mix in accordance with WI Spec. 4 shall be used.

Floors and slabs shall contain temperature and shrinkage reinforcing steel equal to or greater than shown in Table A. Steel shall be placed in the top ½ of the slab thickness with a minimum clear distance from the top of the slab of 1.5 inches.

Additional waterstop *control joints* shall be planned where stresses can be predicted to exceed the reinforcing steel's ability to restrain cracking and minimize leakage.

All waterstop joints in areas subject to equipment traffic shall be designed with a dowel system to transfer the load across the joint. Slab thickness changes at these joints shall be made with a minimum transition ratio of one inch of thickness change over ten inches of run (10:1).

Table A
Reinforcing Steel for Temperature and Shrinkage Control

Control Joint Spacing			
Concrete Thickness	**Rebar Size (grade 60) and Spacing**		
	≤ 100 ft.	≤ 150 ft.	≤ 175 ft.
≤ 5 "	#4 @ 18"	#4 @ 15"	#5 @ 18"
≤ 6 "	#4 @ 18"	#5 @ 18"	#5 @ 15"
≤ 7 "	#4 @ 15"	#5 @ 15"	#5 @ 12"
≤ 8 "	#5 @ 18"	#5 @ 15"	#5 @ 12"

b. Concrete soil composite – The concrete is in *intimate contact* with the soil and the concrete and soil work together to reduce seepage losses. Floors and slabs shall be a minimum of 5 inches thick with reinforcing consisting of #4 bars spaced at 18 inches on center each way. No control or *expansion joints* are required. The concrete shall be placed in intimate contact with the foundation soil. The reinforcing steel shall be continuous through all *construction joints*. Drain tile and/or drain fill material shall be kept outside of the soil component of the composite liner.

2. Impoundment Design Criteria

Soil criteria in Tables 1 through 5 refer to mineral soils. Construction shall not occur on or with organic soils.

Table 1 contains the criteria for constructing waste impoundments into existing soils with recompaction of the upper 1 foot of soil. Tables 2 through 5 contain the criteria for impoundments with liners.

A combination of liners is acceptable. There shall not be more than two liner types used in any one facility. The sump liner does not apply as a liner type in this regard. The liners shall be joined so as to preserve the performance and integrity of all liner types.

Concrete walls used within impoundments shall maintain the integrity of any liner.

Any penetration and overfall/outfalls of the liner shall be constructed to maintain the performance and integrity of the liner used.

Liners shall be designed to withstand all anticipated internal and external loads, and resist agitation scouring.

a. Embankment Requirements

1) The foundation area shall be stripped to remove vegetation and unsuitable materials.

2) A core trench shall be required whenever the settled embankment fill height at the centerline is ≥ 10 feet. Minimum dimensions of the core trench shall be 8-foot bottom width, 2-foot depth, and 1:1 or flatter side slopes.

3) Additional fill for settlement shall be a minimum of 5% of the fill height measured at the centerline.

4) After settlement, the top of the embankment shall be ≥ 1 foot above the surrounding grade. Any diversion along the embankment shall have a capacity for 25-year, 24-hour storm plus 0.5 feet of freeboard.

5) For liquid storage facilities with greater than one acre of surface area and where wave action is a concern, increase the embankment height to account for the calculated wave height, or provide other means to address the wave action concern.

6) The minimum top width shall be according to the table below.

Settled Embankment Fill Height (feet)	Top Width (feet)
0 - 10	≥ 8
10.1 - 15	≥ 10
15.1 - 20	≥ 15
20.1 - 25	≥ 20

7) The sum of interior and exterior side slopes shall be ≥ 5:1 with no slope steeper than 2:1. All slopes must be stable. Additional embankment requirements are contained in the tables.

8) Compaction shall be according to WI FOTG Construction Specification 204, Earthfill for Waste Storage Facilities (Spec. 204).

Table 1 - *In-Place Earth* Criteria for Impoundments 20 Feet Deep or Less [Note 1]

1. Size			
Design Storage Volume		≤ 300,000 cu. ft.	> 300,000 cu. ft.
Manure Produced at Farm per Year		≤ 600,000 cu. ft.	> 600,000 cu. ft.
Waste Characteristics		≥ 4% manure solids in stored waste, ruminant animals only	All
2. Soils [Note 2]			
% Fines		≥ 40%	≥ 40%
Plasticity Index (PI)		≥ 7	≥ 12
Total Thickness, (measured perpendicular to storage surface, includes thickness of recompacted layer)		≥ 5 ft.	≥ 5 ft.
Thickness of Recompacted layer (upper 1' of soil)		≥ 1 ft.	≥ 1 ft.
Construction Specification (for recompacted 1' layer)		WI Spec 204[Note 4]	WI Spec 300[Note 5]
3. Separation Distances			
- Well Distance [Note 3]		≥ 250 ft.	≥ 250 ft.
- Sinkholes		≥ 800 ft.	≥ 400 ft.
- Subsurface Saturation (V.A.9)		≥ 6 ft.	≥ 6 ft.
- Bedrock		≥ 6 ft.	≥ 6ft.
4. Impoundment			
Inside Slope		2.5:1 or flatter	
Embankment		Shall be constructed with material meeting criteria in Table 1 from the inside surface to the embankment centerline, in accordance with the applicable compaction specification for the recompacted 1' layer.	
5. Other			
Scour Protection	Agitation and Pumping Locations	Minimum 20 ft. wide x 30 ft. long x 4 in. thick concrete pad or sump in bottom and 20 ft. wide ramp or a 16 ft. wide ramp with 12 in. high curbs to the top of the facility.	
	Scraping and Other Mechanical Means of Removing Solids and Sand	Protect with hard surfacing designed for the expected conditions and loads, a minimum of 4 in. thick.	
Existing Field Drain Tile		Additional site investigation shall be completed to determine the presence of existing field drain tile within 100 ft. of the footprint of the facility. Any tile found must be abandoned or removed.	

Note 1 The depth is measured from the bottom of the impoundment to the maximum operating level.

Note 2 Soil tests shall be completed in a laboratory on representative samples of soil beneath the proposed liner grade at a rate of 1 test per 15,000 ft^2 of facility footprint, with a minimum of two tests. The PI shall be determined in accordance with ASTM D4318 and the percent fines in accordance with ASTM D1140.

Note 3 Community water system wells may require larger separation distances (see NR 811).

Note 4 WI FOTG Construction Specification 204, Earthfill for Waste Storage Facilities.

Note 5 WI FOTG Construction Specification 300, Clay Liner;

Table 2 - Clay Liner Criteria for Impoundments

1. Size		
Design Storage Volume	≤ 300,000 cu. ft.	> 300,000 cu. ft. [Note 1]
Manure Produced at Farm Per Year	≤ 600,000 cu. ft.	> 600,000 cu. ft.
2. Clay Liner Requirements		
Thickness, Bottom	≥ 3 ft.	As specified in Table 2A
Thickness, Sides	≥ 5 ft.	≥ 5 ft.
% Fines [Note 2]	≥ 50%	≥ 50%
Plasticity Index (PI) [Note 2]	≥ 12	≥ 12
Permeability, cm/sec. [Note 3]	—	≤ $1x10^{-7}$
Construction Specification	WI Spec 204 [Note 4]	WI Spec 300 [Note 5]
3. Separation Distances		
Wells [Note 6]	≥ 250 ft.	≥ 250 ft.
Sinkholes	≥ 400 ft.	≥ 400 ft.
Subsurface Saturation (V.A.9)	≥ 4 ft.	As specified in Table 2A
Bedrock	≥ 4 ft.	As specified in Table 2A
4. Other		
Liner Protection Required		
Agitation and Pumping Locations	Minimum 20 ft. wide x 30 ft. long x 4 in. thick concrete pad or sump in bottom and 20 ft. wide ramp or a 16 ft. wide ramp with 12 in. high curbs to the top of the facility.	
Scraping and Other Mechanical Means of Removing Solids and Sand	Protect with hard surfacing designed for the expected conditions and loads, a minimum of 4 in. thick.	

Note 1 These two columns show the minimum criteria for larger storage facilities and farms, but can also be used for smaller facilities and farms.

Note 2 The PI shall be determined in accordance with ASTM D4318 and the percent fines in accordance with ASTM D1140.

Note 3 Permeability shall be determined by ASTM D5084 from undisturbed samples of the compacted liner.

Note 4 WI FOTG Construction Specification 204, Earthfill for Waste Storage Facilities.

Note 5 WI FOTG Construction Specification 300, Clay Liner.

Note 6 Community water system wells may require larger separation distances (see NR 811).

Table 2A – Clay Liner Thickness [Note 1] (Bottom) and Separations

Impoundment Depth [Note 2] (feet)	Liner Thickness (feet)	Separation to Subsurface Saturation and Bedrock (feet)
0 – 13	≥ 3.0	≥ 4.0
13.1 – 14	≥ 3.2	≥ 4.2
14.1 – 16	≥ 3.6	≥ 4.6
16.1 – 18	≥ 4.1	≥ 5.1
18.1 – 20	≥ 4.5	≥ 5.5
20.1 – 22	≥ 5.0	≥ 6.0
22.1 – 24	≥ 5.4	≥ 6.4
24.1 - 25	≥ 5.7	≥ 6.7

Note 1 Thickness is calculated based on a maximum permeability of $1x10^{-7}$ cm/sec and a specific discharge limit of 500 gallons/acre/day using Darcy's Law.

Note 2 Depth is the distance from the bottom of the impoundment up to the maximum operating level (M.O.L.).

Table 3 - *Geomembrane* Liner Criteria for Impoundments

1. Liner Material			
		60 mil High Density Polyethylene (HDPE) or 60 mil Linear Low Density Polyethylene (LLDPE) or 60 mil Ethylene Propylene Diene Monomer (EPDM). The geomembrane shall be installed with intimate contact to the soil below [Note 1]	
2. Soils (Directly Below Liner)[Note 2]			
% Fines		≥ 40%	≥ 40%
Plasticity Index (PI)		≥ 7	—
Thickness		≥ 2 ft.	≥ 4 ft.
Compaction of Placed Material		WI Spec 204[Note 3]	WI Spec 204[Note 3]
Subgrade preparation requirements		WI Spec 202 or 205[Note 4]	WI Spec 202 or 205[Note 4]
3. Separation Distances			
Well Distance [Note 5]		≥ 250 ft.	≥ 250 ft.
Sinkholes		≥ 400 ft.	≥ 400 ft.
Subsurface Saturation (V.A.9)		≥ 4 ft.	≥ 6 ft.
Bedrock		≥ 4 ft.	≥ 6 ft.
4. Impoundment			
Inside Slope		2.5:1 or flatter.	
5. Other			
Liner Protection Required	Agitation and pumping locations[Note 6]	Minimum dimension of 20 ft. wide x 30 ft. long concrete pad or sump in bottom and 20 ft. wide ramp with 18 in. curb to the top of the facility with provisions for liner integrity. Ramps shall be located to be accessible to the agitation equipment used.	
	Scraping and other mechanical means of removing solids and sand [Note 7]	Protect with hard surfacing designed for the expected conditions and loads.	
Vent system		Required for all facilities. The system shall be designed in such a manner to vent gas from the system. Waste and runoff shall be prevented from entering the venting system. Liquid detection points may be installed as part of the system.[Note 1]	
Liner Installation		• Continuous Inspection Required • All geomembrane placement, seaming, seam testing, and repair and concrete placement for liner protection shall be completed under the continuous observation of a qualified third-party quality assurance inspector under the direction of a Professional Engineer. This inspector shall not be an employee of the contractor, owner, or geomembrane supplier.	

Note 1 Intimate contact does not exclude the use of gravel trenches for gas venting or monitoring systems.

Note 2 The liner is in intimate contact with the soil, and the two work together to reduce seepage losses. The PI shall be determined in accordance with ASTM D4318 and the percent fines in accordance with ASTM D1140.

Note 3 WI FOTG Construction Specification 204, Earthfill for Waste Storage Facilities.

Note 4 WI FOTG Construction Specification 202, Polyethylene Geomembrane Lining and 205, Ethyl Propylene Diene Monomer (EPDM) Geomembrane Lining.

Note 5 Community water system wells may require larger separation distances (see NR 811).

Note 6 Poured-in-place concrete slabs shall meet requirements of Table 5, Note 2 if the geomembrane will be joined to the liquid-tight concrete. All connections between the geomembrane and concrete shall be liquid tight and structurally sound. If the liner protection is placed on top of the geomembrane, it shall be structurally sound, but liquid-tightness is not required. Liner protection poured on top of the geomembrane shall be separated from the geomembrane by a sacrificial layer of the same weight geomembrane and a cushioning layer of 12 oz/sy non-woven geotextile. The sacrificial layer shall not be welded to the geomembrane liner. Liner protection installation over the geomembrane shall be completed by methods that will maintain the integrity and performance of the liner. Liner protection placed on slopes shall be designed with provisions to ensure stability.

Note 7 Sand bedding may be used in conjunction with a geomembrane liner, but the design must include a method to remove sand from the waste stream before it enters the waste storage facility.

Table 4 - *Geosynthetic Clay Liner (GCL)* Criteria for Impoundments

1a. Soils (Directly Below Liner)[Note 1]			
% Fines		≥ 20%	≥ 20%
Plasticity Index (PI)		≥ 7	—
Thickness (from bottom and sides)		≥ 2 ft.	≥ 3 ft.
Compaction of placed material		WI Spec 203[Note 2]	WI Spec 203[Note 2]
1b. Liner Cover Material Thickness			
Bottom		≥ 1 ft.	≥ 1 ft.
Side Slopes		≥ 2 ft.	≥ 2 ft.
Compaction of Placed Materials		WI Spec 203[Note 2]	WI Spec 203[Note 2]
2. Separation Distances			
Well Distance [Note 3]		≥ 250 ft.	≥ 250 ft.
Sinkholes		≥ 400 ft.	≥ 400 ft.
Subsurface Saturation (V.A.9)		≥ 4 ft.	≥ 5 ft.
Bedrock		≥ 4 ft.	≥ 5 ft.
3. Impoundment			
Inside Slope [Note 4]		3:1 or flatter	
4. Other			
Liner Protection	Agitation and Pumping Locations	Minimum dimension of 20 ft. wide x 30 ft. long x 4 in. thick concrete pad or sump in bottom and 20 ft. wide ramp or a 16 ft. wide ramp with 18 in. high curb to top of facility. GCL continues under the concrete pad or sump. Poured in place concrete slabs shall meet requirements of Section V.B.1.	
	- Scraping and Other Mechanical Means of Removing Solids and Sand	Sand bedding may be used in conjunction with a geosynthetic clay liner, but the design must include a method to remove sand from the waste stream before the waste is stored in the liner or the liner must be protected to allow mechanical removal of the sand. Poured in place concrete slabs shall meet requirements of Section V.B.1.	
GCL Material [Note 5]		Non-woven needle punched.	

[Note 1] The liner is in intimate contact with the soil, and the two work together to reduce seepage losses. The PI shall be determined in accordance with ASTM D4318 and the percent fines in accordance with ASTM D1140.

[Note 2] WI FOTG Construction Specification 203, Geosynthetic Clay Liner.

[Note 3] Community water system wells may require larger separation distances (see NR 811).

[Note 4] The GCL and soil cover shall be stable at the designed side slope.

[Note 5] The liner shall be installed according to manufacturer's specifications and WI FOTG Construction Specification 203, Geosynthetic Clay Liner.

Table 5 - Concrete Liner Criteria for Impoundments

	Concrete with Waterstop [Note 1]	Concrete - Soil Composite [Note 2]			
1. Soils (Directly Below Liner) [Note 2]					
% Fines	—	≥ 20%	≥ 20%	≥ 40%	Foundry Sand [Note 5]
Plasticity Index (PI)	—	≥ 7	—	≥ 12	—
Thickness (bottom and sides)	—	≥ 1.5 ft.	≥ 3 ft.	≥ 8 Inches	≥ 1.5 ft.
Compaction of Placed Material	WI Spec 204	WI Spec 204	WI Spec 204	WI Spec 300	WI Spec 204
2. Separation Distances [Note 6]					
Sinkholes Well Distance [Notes 3 and 4]	≥ 400 ft. ≥ 100 ft.	≥ 400 ft. ≥ 100 ft.	≥ 400 ft. ≥ 100 ft.	≥ 400 ft. ≥ 100 ft.	≥ 400 ft. ≥ 100 ft.
Subsurface Saturation (V.A.9)	≥ 2 ft. (1 ft. for sump)	≥ 4 ft. (3 ft. for sump)	≥ 5 ft. (4 ft. for sump)	≥ 3 ft. (2 ft. for sump)	≥ 4 ft. (3 ft. for sump)
Bedrock	≥ 2 ft. (1 ft. for sump)	≥ 4 ft. (3 ft. for sump)	≥ 5 ft. (4 ft. for sump)	≥ 3 ft. (2 ft. for sump)	≥ 4 ft. (3 ft. for sump)
3. Impoundment					
Inside Side Slopes	2.5:1 or flatter	2:1 or flatter			

Note 1 Refer to section V.B.1.a. for design criteria specific to concrete with waterstop.

Note 2 Refer to section V.B.1.b. for design criteria specific to concrete composite liners. The PI shall be determined in accordance with ASTM D4318 and the percent fines in accordance with ASTM D1140.

Note 3 Community water system wells may require larger separation distances (see NR 811)

Note 4 For operations subject to NR 243, the private or non-community Well Separation Distance is 250 ft.

Note 5 The foundry sand must be ferrous foundry sand with only minimal concentrations of hazardous constituents, cores and other over-size materials crushed or removed, and at least 5% bentonite content. A site specific WDNR approval is required under NR 538 that may specify greater separation distances and parameters not addressed by this standard. An NR 538 Category I or II ferrous foundry sand may be appropriate.

Note 6 Lesser separation distances shown for sumps apply only when the total sump area is less than 15% of the floor footprint area of the waste storage facility.

3. Structure Design Criteria

The structure design shall include all items that will influence the performance of the structure, including loading assumptions, material properties, construction quality, waterstops, pipe penetrations, anchor plates, or other attachments to walls such as fence posts. Design assumptions and construction requirements shall be indicated on the construction plans. Waste storage structure separation criteria shall be as shown in Table 6. Any penetration of the structure shall be constructed to maintain the performance and integrity of the structure.

Table 6
Waste Storage Structure Separation Distances

Well Distance[Note 1]	≥ 100 ft.
Sinkholes	
Storage floor above ground	≥ 200 ft.
Storage floor below ground	≥ 400 ft.
Subsurface Saturation and Bedrock	See Table 5

Note 1 For operations subject to NR 243, the private or non-community well separation distances is 250 feet, community water system wells may require larger separation distances (see NR 811).

Structures may be designed with or without covers. Covers, beams, or braces that are integral to structural performance shall be designed accordingly and indicated on the construction drawings. The openings in covered structures shall be designed to accommodate equipment for loading, agitating, and emptying. These openings shall be equipped with grills or secure covers for safety, and for odor and vector control.

a. Fabricated Structures - Fabricated structures shall be designed according to the following criteria:

(1) Steel. "Manual of Steel Construction," American Institute of Steel Construction.

(2) Timber. "National Design Specifications for Wood Construction," American Forest and Paper Association.

(3) Concrete. "Building Code Requirements for Reinforced Concrete, ACI 318," American Concrete Institute. Concrete design calculations shall use a minimum design compressive strength of 3,500 psi.

b. Foundations - The foundations of fabricated waste storage structures shall be proportioned to safely support all superimposed loads without excessive movement or settlement.

Where a non-uniform foundation cannot be avoided or applied loads may create highly variable foundation loads, settlement shall be calculated from site-specific soil test data. Index tests of site soil may allow correlation with similar soils for which test data is available. If no test data is available, presumptive bearing strength values for assessing actual bearing pressures may be obtained from Table 7 or another nationally recognized building code. In using presumptive bearing values, adequate detailing and articulation shall be provided to avoid distressing movements in the structure.

c. Structural Loading - Waste storage structures shall be designed to withstand all anticipated loads including internal and external loads, hydrostatic uplift pressure, concentrated surface and impact loads, frost or ice pressure, and load combinations in compliance with this standard and applicable local building codes.

If a dense ice cover can be expected the designer shall account for the additional point load associated with an ice sheet against a vertical wall.

Where the stored waste is not protected from precipitation, use 65 $lb/ft^2/ft$ of depth as the design internal lateral pressure. Use an internal lateral pressure of 72 $lb/ft^2/ft$ of depth for sand-laden manure. A value of 60 lb/ft^2 may be used where the stored waste is protected from precipitation and will not become saturated. Lesser values may be used if supported by measurement of actual pressures of the waste to be stored.

The lateral earth pressures should be calculated from soil strength values determined from the results of appropriate

soil tests. Lateral earth pressures can be calculated using the procedures in NRCS Technical Release 74, Lateral Earth Pressures. If soil strength tests are not available, the presumptive lateral earth pressure values indicated in Table 8 shall be used.

Lateral earth pressures based upon equivalent fluid assumptions shall be assigned according to the following conditions:

1) Rigid frame or restrained wall. Use the values shown in Table 8 under the column "Frame Tanks," which gives pressures comparable to the at-rest condition.

2) Flexible or yielding wall. Use the values shown in Table 8 under the column "Free Standing Wall," which gives pressures comparable to the active condition. Walls in this category are designed on the basis of gravity for stability or are designed as a cantilever having a base wall thickness to height of backfill ratio not more than 0.085.

   If heavy equipment will be operated near the wall, an additional surcharge equivalent to two feet of soil shall be applied in the wall analysis.

   Structures covers shall be designed to withstand both dead and live loads. The live load values for covers contained in ASAE EP378.3, Floor and Suspended Loads on Agricultural Structure Due to Use, and in ASAE EP393.3, Manure Storages, shall be the minimum used. The actual axle load for tank wagons having more than a 2,000 gallon capacity shall be used.

   If the facility is to have a roof, snow and wind loads shall be as specified in ASCE SEI/ASCE 7-10, Minimum Design Loads for Buildings and Other Structures. If the facility is to serve as part of a foundation or support for a building, the total load shall be considered in the structural design.

d. Concrete Joints

Wall Joints – Cast-in-place vertical walls shall have one control joint with embedded waterstop every 100 feet with a minimum of two control joints per four-sided structure. Vertical wall control joints are not required in structures with less than 100 feet of wall length.

Waterstop shall be embedded or expansive in accordance with WI Spec. 4. The type of waterstop is based on the joint movement criterion indicated below.

If there is no embedded waterstop at the wall base, the wall joint waterstop shall be cast 4 inches into the footing. If there is an embedded waterstop between the footing and the bottom of the wall, the wall joint waterstop shall be welded to a factory fabricated intersection at the base of the wall.

An embedded waterstop shall be installed at the wall to footing intersection if the joint is designed for movement. Either an expansive or embedded waterstop shall be installed at this joint if it is not designed for movement (fixed).

Joints for pre-cast walls shall demonstrate evidence of equivalent performance to waterstop joints as determined by the NRCS State Conservation Engineer.

Floor Joints – Floor joints in vertical walled structures, if used, shall extend through the footing and continue to the top of the vertical wall. Joints shall meet the requirements of section V.B.1. of this standard.

Transitions from concrete wall footings to concrete slabs shall be made at a ratio of one inch of thickness change to one inch of run (1:1) or flatter.

Table 7 – Presumptive Allowable Bearing Stress Values [Note 1]

Class of Materials	Allowable Foundation Pressure (psf)
Crystalline Bedrock	12,000
Sedimentary and Foliated Rock	4,000
Sandy Gravel or Gravel (GW and GP)	3,000
Sand, Silty Sand, Clayey Sand, Silty Gravel, Clayey Gravel (SW, SP, SM, SC, GM and GC)	2,000
Clay, Sandy Clay, Silty Clay, Clayey Silt, Silt and Sandy Silt (CL, ML, MH and CH)	1,500

[Note 1] International Building Code (IBC), 2006, International Code Council (ICC)

Table 8 - Lateral Earth Pressure Values [Note 1]

Soil		Equivalent Fluid Pressure (lbs./sq. ft./per ft. of depth)			
		Above Water Table		Below Water Table [Note 3]	
Description	Unified Classification [Note 2]	Free Standing Wall	Frame Tanks	Free Standing Wall	Frame Tanks
- Clean gravel, sand or sand-gravel mixtures (maximum 5% fines)[Note 4]	GP, GW, SP, SW	30	50	80	90
- Gravel, sand, silt and clay mixtures (< 50% fines) - Coarse sands with silt and/or clay (<50% fines)	All gravel/sand dual symbol classifications and GM, GC, SC, SM, SC-SM	35	60	80	100
- Low-plasticity silts and clays with some sand and/or gravel (≥ 50% fines) - Fine sands with silt and/or clay (< 50% fines)	CL, ML, CL-ML, SC, SM, SC-SM	45	75	90	105
- Low to medium plasticity silts and clays with little sand and/or gravel (≥ 50% fines)	CL, ML, CL-ML	65	85	95	110
- High plasticity silts and clays (liquid limit more than 50)[Note 5]	CH, MH	–	–	–	–

[Note 1] For lightly compacted soils (85% to 95% maximum standard density). Includes compaction by use of typical farm equipment.

[Note 2] All definitions and procedures in accordance with ASTM D2488 and D653.

[Note 3] Includes hydrostatic pressure from subsurface saturation.

[Note 4] Generally, only washed materials are in this category.

[Note 5] Not recommended. Requires special design if used, see the companion documents in Chapter 10 AWMFH.

C. Specific Criteria for Permanent Stacking Facilities at the Animal Production Area

This criteria does not apply to the unstacked wastes that accumulate in animal housing units.

This criteria applies to stacking the following materials in a confined manner at the animal production area:

- Separated manure solids
- Compost
- Dewatered, recycled sand storage
- Poultry litter (turkey or broiler operations)
- Dry poultry layer manure
- Bedded manure (>50% solids)
- Waste feed (<50% moisture)

Facilities must be designed to prevent run-on and runoff, and operated to prevent ponding and significant hydrostatic head. Facilities may commonly be located near the ground surface, but may be above or below ground. Criteria for stacking facilities are shown in Table 9. **Solids stacking within the animal production area may also be done in an impoundment (Tables 1 through 5) or section V. B. 3.** Methods to ensure ongoing compliance with the criteria must be incorporated into the Operation and Maintenance Plan.

Table 9 – Liner Criteria for Permanent Solids Stacking Facilities at the Animal Production Area Note 1

	Roofed		**Not Roofed** Note 2	
	Work Surface Note 3	No Surface Note 4	Work Surface Note 3	No Surface Note 4
1. Soils In-Place Liner Note 4				
% Fines	≥ 30%	≥ 30%	≥ 40%	≥ 40%
Plasticity index (PI)	-	≥ 7	-	≥ 7
Thickness	≥ 2 ft.	≥ 2.5 ft.	≥ 3 ft.	≥ 5 ft.
2. Soils Compacted Liner Note 4				
% Fines	≥ 30%	≥ 40%	≥ 40%	≥ 40%
Plasticity index (PI)	≥ 5	≥ 7	≥ 7	≥ 7
Thickness	≥ 1.5 ft.	≥ 2 ft.	≥ 2 ft.	≥ 3 ft.
Compaction	WI Spec 204	WI Spec 204	WI Spec 204	WI Spec 204
3. Separation Distances				
Sinkholes	≥ 400 ft.	≥ 400 ft.	≥ 400 ft.	≥ 400 ft.
Well distance Note 5	≥ 100 ft.	≥ 100 ft.	≥ 100 ft.	≥ 100 ft.
Subsurface Saturation	≥ 3 ft.	≥ 3 ft.	≥ 5 ft.	≥ 5 ft.
Bedrock	≥ 3 ft.	≥ 3 ft.	≥ 5 ft.	≥ 5 ft.
4. Stacking Area	Stacking area not to exceed 7 acres for unroofed managed compost, 2 acres for sand, 2 acres for roofed facilities, or 1 acre for all other materials.			

Note 1 Solids and sand stacking facilities, treatment areas and other production area structures and systems may be subject to surface water setbacks and other requirements under state and local rules. MOL requirements do not apply to this Table.

Note 2 Facilities that are not roofed must have floors sloped to control surface drainage; and, unless used only for properly managed composting, all leachate and runoff (up to the 25-yr., 24-hr. storm) must be managed as follows:

Collect leachate and runoff in a facility suitable for liquid containment (Tables 1 through 6) or transfer receptacle (WI FOTG Standard 634), until land applied in accordance with WI FOTG Standard 590, or provide other acceptable treatment for runoff only. Acceptable treatment methods for runoff may only include those described in WI FOTG Standard 635 or WI FOTG Standard 629.

Note 3 The work surface may be constructed of any of the following: minimum 3 in. for asphalt; minimum 4 in. for concrete; or minimum 8 in. for macadam, and designed for anticipated equipment loads. Refer to industry standard design criteria for each work surface material. The purpose of the work surface is to protect the liner material.

Note 4 Facilities without a work surface must be operated to minimize rutting and removal of the soil liner. Ruts must be repaired and the soil liner thickness maintained after material handling. Stacking height is not to exceed 10 ft. The PI shall be determined in accordance with ASTM D4318 and the percent fines in accordance with ASTM D1140.

Note 5 Additional separation distances to wells may be necessary on WDNR regulated farms.

D. **Specific Criteria For Temporary, Unconfined Stacks of Manure and Derivatives Outside the Animal Production Area**

This includes solid type manure and derivatives that are deposited for subsequent loading and spreading. Waste material having less than 16% solids shall not be stacked in the field. Storage of these materials shall be in facilities meeting the criteria in section V.B.1 and 2. Criteria for unconfined waste stacks are shown in Table 10.

Conservation BMPs shall be used above stacking sites to divert overland flow, and below stacking sites to provide containment or buffering to downstream channels and lakes.

The maximum amount of manure that is stacked on any one field shall be limited to the nutrient needs of fields adjacent to the stacking site in accordance with a 590 nutrient management plan.

Table 10 – Temporary, Unconfined Stacks of Manure and Derivatives Outside the Animal Production Area

1. Waste Consistencies [Note 1]		
	> 32% Solids	16% to 32% Solids [Note 2]
2. Size & Stacking Period		
Stacking Period	8 months	8 months
Maximum Volume/Stack	≤ 40,000 cu ft.	≤ 15,000 cu ft.
Maximum Number of Stacks/40 acres [Note 3]	–	2
Frequency of Stacking Site Use	1 year out of 2	1 year out of 3
3. *Hydrologic Soil Groups*		
	B or C	B or C
4. Subsurface Separation Distance		
Subsurface Saturation	≥ 3 ft.	≥ 3 ft.
Bedrock	≥ 3 ft.	≥ 5 ft.
5. Surface Separation Distance		
Wells [Note 4]	≥ 250 ft.	≥ 250 ft.
Lakes	≥ 1,000 ft.	≥ 1,000 ft.
Sinkholes, or other Karst Features	≥ 1,000 ft.	≥ 1,000 ft.
Quarries	≥ 1,000 ft.	≥ 1,000 ft.
Streams	≥ 300 ft.	≥ 500 ft.
Wetlands and Surface Inlets	≥ 300 ft.	≥ 500 ft.
Areas of Concentrated Flow	≥ 100 ft.	≥ 300 ft.
Land Slope Down Gradient of Stack	≤ 6%	≤ 3%
Floodplain	≥ 100 ft.	≥ 300 ft.
Tile lines	≥ 40 ft.	≥ 40 ft.

Note 1 Refer to AWMFH, Figure 9-1 for consistency values and Chapter 4 for % solids, for specific livestock types.

Note 2 16% to 32% solids represents waste at near saturation conditions where additions of free water from runoff, rain, or snowmelt can result in liquid flow conditions.

Note 3 The separation distance between stacks shall be at least 100 feet.

Note 4 Community water system wells may require larger separation distances (see NR 812).

VI. Considerations

Additional recommendations relating to design which may enhance the use of, or avoid problems with, this practice, but are not required to ensure its basic conservation function are as follows:

A. Consider using the companion documents located in Chapter 10 of the NRCS, Agriculture Waste Management Field Handbook (AWMFH).

B. Consider using the Waste Storage Design spreadsheet located in Chapter 10 of the NRCS AWMFH for design storage volume, liner thicknesses, and other calculations described in this standard.

C. Implementing erosion control methods on the top half of the inside slopes of earthen impoundments may reduce erosion.

D. Adding an auxiliary spillway, additional embankment height, or both may be needed to help protect the embankment, particularly for systems that store large volumes of runoff. Factors such as downstream hazards and receiving waters should be evaluated in this consideration. Locate the auxiliary spillway to direct waste overflows away from receiving waters or sensitive areas. See Consideration N below for more ways to address environmental concerns.

E. Non-polluted runoff should be excluded except where its storage is advantageous.

F. Separating solids from waste entering waste storage facilities may minimize the frequency of accumulated solid removal and benefit the pumping and application of the stored waste; however, this may increase odors.

G. Consider outletting drainage systems to locations that will not directly enter surface water.

H. Adding or including steel reinforcement in slabs that will be scraped may prevent vertical displacement at crack locations.

I. Consider placing a permanent marker at the level one-foot below the top of the storage facility and a marker to designate the empty level. This consideration is particularly important for operations considering future herd expansion to WPDES permit size.

J. Monitoring and leakage collection systems should be considered for larger waste storage facilities, especially where the site assessment indicates the area is sensitive for groundwater impacts. This is particularly important for operations considering future expansion to WPDES permit size. Components of a designed system may include secondary containment (soil or synthetic), leachate collection, leachate recirculation, monitoring sumps, and/or monitoring wells. See NR 141 for regulations concerning monitoring wells.

K. Composting should be done in accordance with guidance from books such as “On-Farm Composting Handbook,” NRAES-54, or equivalent.

L. Avoid locating facilities in areas where negative impacts to water resources may occur, particularly near streams or in floodplains.

M. Consider incorporating the following practices into the waste management system to reduce emissions of greenhouse gases, ammonia, volatile organic compounds, and odor:

- National Handbook of Conservation Practices (NHCP), Standards 366, Anaerobic Digestion-Controlled Temperature; 367, Waste Storage Cover; and 317, Composting Facility;
- Siting of livestock housing or feedlots, manure storage, and land application;
- Biofilters;
- Feed ration additives and adjustments;
- Manure additives, disinfectants, or aeration;
- Incorporation of manure when land-applied;
- Moisture and dust control within livestock housing areas; and
- Dead animal disposal plans.

For additional information on odor abatement see: ASAE EP379.4 Jan. 2007, Management of Manure Odors.

N. The following should be considered either singly or in combination to minimize the potential of or the consequences of sudden breach of embankments:

- Storage for wet-year rather than normal-year precipitation,
- Reinforced embankment, such as additional top width, flattened and/or armored downstream side slopes, and
- Secondary containment.

O. When designing impoundment embankments, consider using flatter slopes on the outside embankment slope. This would provide better operation access and easier maintenance of the impoundment (i.e., pumping equipment access, mowing, and removal of woody vegetation.)

P. As-Built Plans and other certification (attesting) documentation, a required element of a Construction Inspection Plan, is normally required to be submitted to the permitting or cost-sharing authorities prior to placing the waste storage facility in service.

Q. Consider designing a waste storage facility to contain more than the 25-year, 24-hour rainfall event if: due to site conditions, a rainfall event greater than the 25-year, 24-hour storm is likely to cause a significant discharge to surface water; or the operation will become a permitted CAFO and it houses swine, poultry or veal calves, and the waste storage facility will be uncovered.

R. Well construction logs within ½ mile of the proposed facility, available from the Wisconsin Geologic and Natural History Survey and/or the Wisconsin Department of Natural Resources may be included to promote understanding of water supply aquifers in the area along with area hydrogeology.

S. Consider increasing the horizontal reinforcement ratio beyond the minimum required in ACI 318 for vertical crack control in concrete walls.

T. A secondary liner directly below concrete joints with waterstops should be considered where the site assessment indicates the area is sensitive to leakage impacts.

VII. References

American Society of Civil Engineers (ASCE), Minimum Design Loads for Buildings and Other Structures, SEI/ASCE 7-10.

American Society of Agricultural and Biological Engineers (ASABE), Standards EP378.3, EP393.2, EP379.4, and EP470.

American Society of Testing Materials (ASTM) D1140, D4318, D5084, D2488, and D653.

Building Officials and Code Administrators, Inc. (BOCA), Basic Building Code, 12th Edition, 1993.

Manual of Steel Construction, American Institute of Steel Construction.

National Design Specifications for Wood Construction, American Forest and Paper Association.

Northeast Regional Agricultural Engineering Service, NRAES-54, On-Farm Composting Handbook, June 1992.

USDA, NRCS, Agricultural Waste Management Field Handbook, Part 651, 1992.

USDA, NRCS, National Handbook of Conservation Practices.

USDA, NRCS, Technical Release 74, Lateral Earth Pressures.

USDA, NRCS Wisconsin Field Office Technical Guide (FOTG), Section IV, Practice Standards and Specifications.

Wisconsin Administrative Code, Department of Natural Resources, Chapters NR 141, NR 243 and NR 812.

VIII. Definitions

% Fines (Table 1) – Percentage of given sample of soil which passes through a #200 sieve.

Animal Production Area (V.A.1.) – Means any part of the livestock operation that is used for the feeding and housing of livestock. This includes the entire animal confinement and feeding area, and any adjacent manure storage areas, raw materials storage areas, and waste containment areas. This does not include pasture and cropland.

Bedrock (V.A.2.b.1)) – The solid or consolidated rock formation typically underlying loose surficial material such as soil, alluvium or glacial drift. Bedrock includes but is not limited to limestone, dolomite, sandstone, shale and igneous and metamorphic rock.

Note: Although solid or consolidated bedrock can sometimes be removed with typical excavation equipment, these materials are included in the above definition.

Confined Space (V.A.10) – Confined Space is a space that 1) contains or has the potential to contain a hazardous atmosphere; 2) is large enough and so configured that a person can bodily enter; 3) has limited or restricted means for entry or exit; and 4) is not designed for continuous human occupancy.

Construction Joint (V.B.1.b.) – These joints are used where a fresh pour of concrete abuts an existing recent pour. Construction joints where the steel is continuous through the joint are considered to be monolithic and liquid tight, if constructed properly.

Contaminated Runoff (II) – Runoff that has come through or across a barnyard or animal lot or feed storage area. It generally includes the runoff and any manure, sediment, feed, or other material carried in the runoff. It contains lower concentrations of contaminants than leachate from feed or manure.

Control Joints (V.B.1.a.) – Control joints, often called contraction joints, are used to control the location of cracks caused by concrete shrinkage during setting and thermal changes. Steel reinforcement is interrupted in control joints with embedded waterstop.

Cultural Resources (V.A.2.a.) – Cultural resources are the traces of any past activities and accomplishments of people. They include tangible traces such as historic districts, sites, buildings, structures, historical documents and cemeteries. They also include traces of less tangible objects such as dance forms, aspects of folk-life, cultural or religious practices, and some landscapes and vistas.

Drainage System (V.A.9.c.) – Water conveyance measures of specified capacity, location, and material that insure the removal of water to a free outlet.

Effective Height (III) – Height from the settled top of the embankment to the lowest point of the existing ground surface, measured at the centerline.

Expansion Joints – (V.B.1.b.) – These joints are used to prevent crushing of abutting concrete or other structural units due to compressive forces developed during expansion caused by high temperature.

Flood Prone Areas (V.A.3.) – These include areas delineated as floodplains on Federal Emergency Management Agency (FEMA) maps, or local floodplain maps as well as areas along perennial streams (blue lines) shown on the United States Geologic Survey quadrangle sheets that may be subject to out of bank flows.

Footprint (V.A.2.b.2)) – This is the horizontal area within the perimeter of a facility liner, or the perimeter of a work surface that may cover a liner. For a liquid or solids containment facility, the footprint is the maximum horizontal extent of containment. For a liquid impoundment facility or pond, the footprint is normally defined by the inside top of the embankment. For a solids storage facility, the footprint is normally defined by the edge of the pad, the curb on a pad, or the inside surface of bunker walls.

Geosynthetic Clay Liner, GCL (Table 4) – A manufactured hydraulic barrier consisting of clay bonded to a layer or layers of geosynthetic materials.

Geomembrane (Table 3) – Very low permeability synthetic membrane liner or barrier used with any geotechnical engineering related material so as to control fluid migration in a man-made project, structure or system. (ASTM D 4439)

Gleyed Soil (V.A.2.b.3)) – A soil condition resulting from prolonged soil saturation, which is manifested by the presence of bluish or greenish colors through the soil mass or in mottles (spots or streaks) among the colors. Gleying occurs under reducing conditions, by which iron is reduced predominantly to the ferrous state.

Hydrologic Soil Groups (Table 10) – Hydrologic Groups (HSG) are assigned for all soils mapped by USDA soil scientists. The hydrologic soil group, designated A, B, C, or D, indicates, in general, the amount of runoff to be expected from the soil after prolonged wetting. Soils in Group A yield very little runoff because they are rapidly permeable. Soils in Hydrologic Group D take water very slowly and yield large amounts of runoff. See Section II of the NRCS Wisconsin Field Office Technical Guide for HSG designations.

Impoundment (I) – A waste storage facility constructed of earthen embankments and/or excavations for the purpose of storing waste. An impoundment may be lined or unlined.

In-Place Earth (Table 1) – The entire surface of the bottom of the impoundment is excavated a minimum depth of one foot into the native soil.

Intimate Contact (V.B.1.b.) – Direct contact between liner materials (concrete, GCL, and geomembrane) and soil.

Karst (V.A.2.c.) – Refers to areas of land underlain by carbonate bedrock (limestone or dolomite). Typical land features in karst areas include sinkholes, disappearing streams, closed depressions, blind valleys, caves, and springs. See the companion document in Chapter 10 of the AWMFH for additional discussion of karst features.

Leachate (II) – Concentrated liquid waste which has percolated through or drained by gravity from a pile of

manure, manure processing derivative, or animal feed. It contains much higher concentrations of contaminants than Contaminated Runoff.

Manure Processing Derivatives (II) – The by-products and waste components that are produced as a result of treatment and processing practices. These include, but are not limited to, the following waste components: separated sand, separated manure solids, precipitated manure sludges, supernatants, digested liquids, composted biosolids, process waters.

Nutrient Management Plans (III) – A planning document that outlines the requirements for managing the amount, form, placement, and timing of applications of plant nutrients to cropland.

Perched Conditions (V.A.9.c.) – Perched conditions describe a soil moisture regime where saturated soil is located above unsaturated soil.

Permeability (Table 2) – The coefficient of permeability (K) is a measure of the ability of soil to transmit liquids. It is used to compute the flow rate of liquid through a soil liner for specific conditions of soil thickness and fluid head.

Plasticity Index, PI (Table 1) – A soil property indicating moldability. Measured by ASTM D4318.

Sinkholes (V.A.2.c) – Closed, usually circular depressions which form in karst areas. Sinkholes are formed by the downward migration of unconsolidated deposits into solutionally enlarged openings in the top of bedrock.

Structure (I) – A waste storage facility consisting of constructed surfaces, tanks, or walls for the purpose of storing waste above or below the ground surface. Structures may be constructed of concrete, steel, wood or other construction materials.

Wastewater (II) – Milking center waste, flush water, leachate from feed holding areas, and similar waste materials generated at the animal production area.

Figure 1
Design Storage Volume

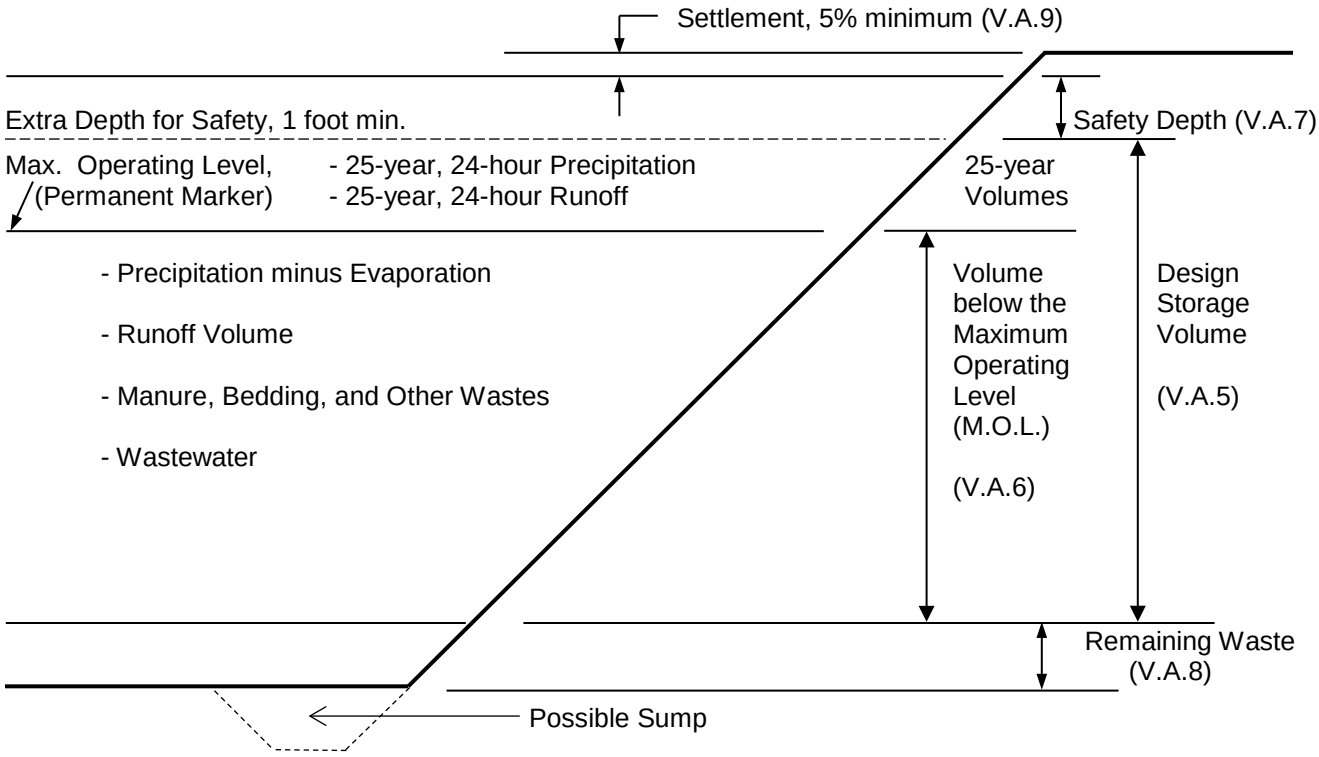

IMPOUNDMENT

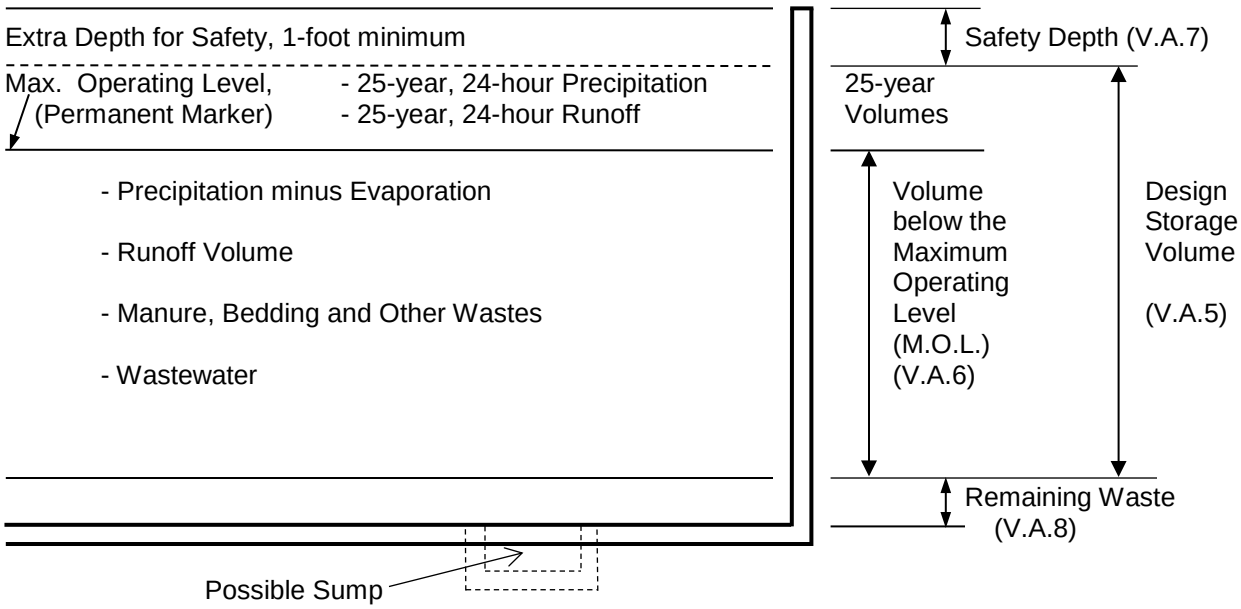

STRUCTURE

WASTE TREATMENT

(No.)
Code 629

Natural Resources Conservation Service
Conservation Practice Standard

I. Definition

The mechanical, chemical, or biological treatment of agricultural waste.

II. Purpose

To use mechanical, chemical, or biological treatment facilities and/processes as part of an agricultural waste management system to:

- improve ground and surface water quality by reducing the nutrient content, organic strength, and/or pathogen levels of agricultural waste;
- improve air quality by reducing odors and gaseous emissions;
- produce value added byproducts;
- facilitate desirable waste handling, storage, or land application alternatives; and
- manage *leachate*[1] and *contaminated runoff* emanating from livestock *feed storage areas*.

III. Conditions Where Practice Applies

This practice applies where the form and characteristics of agricultural waste make it difficult to manage so as to prevent it from becoming a nuisance or hazard or where changing the form or composition provides additional utilization alternatives, and where conventional waste management alternatives are deemed ineffective.

This practice applies to:

- The treatment of *milking center wastewater* from *milking centers* producing up to 500 gallons of wastewater per day.
- Leachate and contaminated runoff generated by livestock feed and *waste feed* storage areas.
- Liquids and solids that need to be separated for further processing or for effective transport and subsequent utilization.
- Raw agricultural waste containing excess nutrient concentration too high for direct land application based on crop utilization requirements or nutrient ratios need to be modified to be more consistent with crop utilization requirements.
- Reducing the potential for leaching or runoff of nutrients and providing an appropriate location for discharge.
- The reduction of odors and/or gaseous emissions from livestock production facilities and waste storage/treatment system components.
- The production of value-added byproducts which can be produced to offset treatment costs.
- The reduction of pathogens.

IV. Federal, Tribal, State, and Local Laws

Users of this standard should be aware of potentially applicable federal, tribal, state and local laws, rules, regulations or permit requirements governing waste treatment. This standard does not contain the text of federal, tribal, state, or local laws.

Concentrated animal feeding operations will need to comply with the requirements of Wisconsin Administrative Code NR 243, Animal Feeding Operations.

V. Criteria

The following criteria establish minimum allowable limits for design parameters, acceptable installation processes, or performance requirements.

A. General Criteria

1. Management Assessment

   A management assessment shall be conducted, documented, and incorporated into the design. The assessment shall be performed with owner/operator to explore waste treatment options, available resources, and waste characteristics.

   The designer shall provide a narrative describing the agricultural waste management system, the waste treatment components objectives, and the anticipated outcomes of implementation. The narrative shall also include the waste management strategy for utilization, storage, or land spreading of the wastes following treatment.

[1]Words in the standard that are shown in italics are described in VII. Definitions. The words are italicized the first time they are used in the text.

The management assessment shall address the following:

- waste characterization – *consistency*, volume, nutrient content, sources, and degree of *source control*;
- current equipment, labor, and management capabilities;
- expected changes to current equipment, labor, management and equipment, including expansion needs.

2. Site Assessment

A site assessment shall be conducted, documented, and incorporated into the design. The assessment shall be performed to determine physical site characteristics that will influence the placement, construction, maintenance, and environmental integrity of a proposed waste treatment system. The assessment shall include input from the owner and operator. The site assessment shall include the following:

a. Locations of buildings, roads, lanes, soil test pits, property lines, setbacks, easements, wells, *surface water features*, surface drains, drain tile, utilities, *cultural resources*, and wetlands.

b. Test pits or soil boring logs, soil test results, a soil survey photo and a narrative describing the design parameters that have been derived from the soils data. These test pit/soil borings shall extend to *bedrock*, a free water surface, or to a minimum depth to ensure the required separation distances for the proposed component are achieved. Test pit or soil boring criteria shall include the following.

1) The number, depth, and distribution needed to characterize the subsurface (soil layers, saturation, and bedrock). Test pits or borings shall be added if there is inconsistency within or between test pits or borings.

2) Based on the facility *footprint*, there shall be a minimum of one test pit or boring per 15,000 square feet of footprint, with a minimum of two per facility. Test pits and borings used to meet these criteria shall be located in the footprint or no more than 100 feet from the footprint.

A feed storage area and a *vegetated treatment area* (VTA) for runoff treatment are considered separate facilities.

3) Soil layers shall be described with respect to thickness, texture using the Unified Soil Classification System (USCS) as per ASTM D2488, Munsell color, presence and color of redoximorphic features (soil mottling), *gleyed soil* and moisture condition.

4) The elevation of bedrock and bedrock type encountered such as sandstone, limestone, dolomite, or granite.

5) The upper elevation of all saturated layers encountered.

c. Locations of *sinkholes* and other *karst* features within 1,000 feet of the facility.

d. Locations, dimensions, elevations, soil volumes, soil samples, and reclamation plans of any borrow areas. Characterize borrow areas according to Section V.A.2.b.1), 3), and 4).

e. Identification of potential impacts from failure of system components.

3. Separation From Subsurface Saturation or Bedrock

The separation is determined to be the closest distance from any point on the inside surface of the component to the feature from which separation is required.

The definition of subsurface saturation is not intended for application in any context other than to protect components installed from hydrostatic loadings.

a. For the purposes of this standard, factors used to identify subsurface saturation shall include observed saturation, gleyed soil, gray mottles, and soil color in conjunction with nearby surface water features. The highest subsurface saturation elevation in a test pit/soil boring will be identified by any of the following soil properties.

1) Free water or wet soil identified by glistening, due to the slow release of water.

2) Gleyed soil, that may extend uninterrupted from an observed free water surface.

3) The presence of distinct gray redoximorphic features with a chroma of 2 or less based on Munsell color charts.

4) Depleted matrices having a value of 4 or more and chroma 2 or less based on Munsell color charts. In some cases soil parent materials have a natural color of 2 chroma or less or gleyed color that is not due to saturation. In these cases other indicators may be used: landscape position, elevation or soils in relation to nearby water features.

b. In soils not conducive to mottling, such as sand, the subsurface saturation elevation shall be established by evaluating the soil morphology of the soil profile. Other indicators that may be considered in making the determination are the position of the soil in the landscape, topography, nearby wetlands and well construction logs.

c. Subsurface saturation, if encountered shall not be drained (or have water-bearing layers removed) except as described for *perched conditions*. Perched conditions may be drained or water-bearing materials removed to achieve separation distances in the tables and relieve hydrostatic loads. Documentation to demonstrate that subsurface saturation are perched and of drainable extent or its effects otherwise eliminated shall be included in the site assessment. All *drainage systems* shall drain by gravity. The effect of temporary tailwater on the structure or liner and the effects of outletting to perennial and intermittent waterways shall be evaluated. A drainage system shall be located around the outside perimeter of the component footprint and drain to a surface outlet.

d. If the site assessment indicates artesian features, a hydrogeologic and geotechnical evaluation of the site shall be completed to determine the site suitability for in-ground components.

e. Excavation of bedrock is permitted to achieve the required separation distance as specified in the tables. Bedrock shall not be removed by blasting. The exposed bedrock surface shall be evaluated to ensure a structurally sound base. Fractures or voids shall be treated to prevent migration of soil material. The surface of excavated bedrock shall have a positive grade, minimum of 1 percent, under and away from the storage facility, as to prevent any significant ponding on the rock surface. If bedrock is excavated, the material placed between the component and the bedrock shall have a minimum of 20% passing the #200 sieve.

4. Design

The waste treatment system provider shall complete and supply to the landowner/operator a detailed design of the facility/process clearly outlining the objectives and anticipated outcomes of implementation.

The 25-year, 24-hour storm design criteria shall be used to exclude clean water runoff from entering the proposed component areas.

The treatment system shall be located a minimum of 25 feet from a perforated subsurface clean water drainage tile, unless hydraulically separated to prevent leachate and contaminated runoff from entering drainage tile.

Facilities located in *flood prone areas* shall be protected from inundation, structural damage, and instability. These facilities shall be designed to accommodate any additional loading resulting from static water levels or saturated soil. The lowest point at which floodwater could enter the proposed component areas shall be 2 feet above the maximum elevation of flow resulting from a 100-year, 24-hour rainfall event.

5. Components

Waste treatment facilities and processes may consist of multiple components. Where

criteria for individual components are described in existing NRCS practice standards, those practice standards and their specific criteria shall be used for planning, designing, and installation of that component.

Where components of a facility or process are not described in a current NRCS practice standard, the system provider shall furnish a one-year warranty on all construction or applied processes. In addition, the manufacturer shall provide a warranty that describes the service life of each component and what the warranty covers.

The waste treatment facility or process shall have a minimum practice life of ten years. Where components have less than a ten-year service life, their planned replacement during the life of the practice shall be clearly identified in the operation and maintenance plan.

6. Safety

Design of the process or facility shall include safety features to minimize hazards. Guards and shields shall be provided for moving parts of the equipment used in the treatment process. Waste treatment facilities shall be fenced and warning signs shall be posted where needed to prevent children and others from entering a hazardous area.

All treatment processes shall be carried out in accordance with all safety regulations. Protective clothing shall be utilized when handling potentially harmful chemicals that may be used in the process.

If the facility includes a *confined space*, the confined space shall be configured in such a way that monitoring for hazardous gases, ventilation, observation of workers in the confined space, and extraction of workers from the confined space are all possible and practicable. Provisions of the American Society of Agricultural and Biological Engineers (ASABE) Standard EP 470, Manure Storage Safety, shall be followed.

7. Plans and Specifications

Plans shall include engineering drawings and supporting documentation as well as other plans required to manage the system.

Plans and specifications for waste treatment facilities shall be prepared in accordance with the criteria of this standard and good engineering practice.

As a minimum, the plans and specifications shall provide the following:

- layout and installation details of proposed facilities, waste collection points, waste transfer components, waste treatment and storage facilities;
- location and elevation of all inflow and discharge pipelines, pipeline materials, diameter and slope;
- details of support systems for all components of the treatment facility; and
- fencing and signage as appropriate for safety purposes.

8. Operation and Maintenance

An operation and maintenance (O&M) plan shall be developed and reviewed with the owner/operator prior to construction of a waste treatment facility or implementation of a waste treatment process. The O&M plan shall be consistent with the proper operation of all system components and shall contain requirements including but not limited to the following:

- recommended loading rates of the waste treatment facility or process for hydraulic and critical pollutant parameters;
- proper operating procedures for the waste treatment facility or process, including the amount and timing of any chemicals added;
- operation and maintenance manuals for control devices and other equipment used as components of the waste treatment facility or process;
- description of the planned startup procedures, normal operation, safety issues, and normal maintenance items. This includes procedures for the planned replacement of components;
- alternative operation procedures in the event of equipment failure;
- troubleshooting guide; and
- monitoring and reporting plan designed to demonstrate system performance on an ongoing basis, if required.

B. Specific Criteria for Milking Center Wastewater Treatment

This practice standard criterion does not apply to:

- the treatment of barn and holding area manure, waste milk, and sewage from restrooms and laundry facilities;
- those operations of a size to be regulated by a Wisconsin Pollutant Discharge Elimination System (WPDES) permit in accordance with NR 243 Animal Feeding Operations or NR 214 Land Treatment of Industrial Liquid Wastes, By-Product Solids and Sludges.

1. Criteria Applicable to All Treatment Methods.

a. Design Criteria

1) Exclude surface water runoff from entering the milking center wastewater treatment system.

2) Pipelines shall be designed to avoid freezing.

3) Design Flow Rate – Design flow shall be determined by measuring or estimating using the procedures in the companion documents located in the Wisconsin supplement to Chapter 10 of the NRCS Agriculture Waste Management Field Handbook (AWMFH).

b. Operation and Maintenance

An operation and maintenance plan shall be developed that is consistent with the purposes of the practice, its intended life, safety requirements, and the design criteria.

The operation and maintenance plan shall include the following.

- A management plan. The treatment system shall be operated in conformance with a management plan. The management plan shall specify information on pretreatment processes including source control, load and rest schedules, scheduled maintenance, vegetative cover management and removal, scheduling of soil nutrient testing, operational strategies for periods of adverse weather, monitoring procedures, and any other pertinent information. The management plan shall be updated to account for changes in an operation.
- A contingency plan to address unexpected volumes of waste milk, wastewater, and runoff.
- An emergency response plan to address the containment, clean-up, and reporting of spills.
- Provisions to ensure that waste milk is never dumped into any treatment system requiring a pretreatment tank.
- Maintenance and repair of fencing.
- Annual pumping and solids removal from pretreatment tanks. Contents of the tank shall be land applied according to a *spreading plan*, stored in a waste storage facility meeting the criteria of Wisconsin NRCS Field Office Technical Guide, Section IV (WI FOTG), Conservation Practice Standard 313, Waste Storage Facility, or removed by a licensed hauler.

c. Prefabricated Underground Pretreatment Tanks (Pretreatment Tank)

Pretreatment can be accomplished using a prefabricated concrete, steel, or plastic sewage (“septic”) tank. Requirements for using pretreatment tanks include the following.

- Those currently listed on the Wisconsin Department of Safety and Professional Services , Safety and Building Division Plumbing Products Database.
- Compliance with all stipulations listed in the Department of Safety and Professional Services approval that relate to liquid tightness and/or structural strength.
- Appropriate baffling to function as grease traps.
- A minimum of 15 feet separation from established or planned roadways.
- Adequate ballast to prevent flotation.
- A separation distance of at least 25 feet from any *channelized flow* path, surface water feature, well, and karst feature; greater than 10 feet from any water supply line; greater than 5 feet from any building; and greater than 2 feet from any property line.

d. Milkhouse Plumbing

1) A sanitary trap is required to prevent gasses from flowing into the milking center from the treatment system.

2) Materials must be provided to ensure all riser joints, access openings, and pipe connections are installed watertight.

3) For all treatment methods, except frequent haul, a flow diverter valve shall be installed at the discharge end of the wash water transfer line to divert waste milk from the treatment system.

e. Safety

Install a fence around the milking center treatment system where needed to exclude people, equipment and/or animals. Open storage containers or access openings shall be fenced, covered, or secured to prevent entry by people or animals. Warning signs shall be posted to alert people of the dangers of entering the storage container or pretreatment tank. Provisions of the ASABE Standard EP 470, Manure Storage Safety, shall be followed.

2. Specific Criteria for Frequent Haul

a. This system uses a storage container to receive and hold wastewater discharged from the milking center. The wastewater is removed from the storage container and land applied in accordance with a spreading plan. Hauling equipment shall be capable of transporting the liquid and solid waste without spillage. The application rate shall be limited to prevent runoff.

1) Design

a) The storage container capacity shall be a minimum of three days and no more than ten days of discharge from the milking center.

b) The storage container shall be water tight and designed to withstand all loads to which it will be exposed including but not limited to the spreader being filled. The container shall be equipped with a high water alarm to facilitate management.

Provide a vent to the atmosphere for covered storage containers.

Each storage container having a cover shall be provided with a minimum access opening of 23 inches that allows for storage container maintenance. The opening shall terminate above grade.

The options for storage containers include:

- Tanks meeting structural criteria contained in WI FOTG Standard 634, Waste Transfer,
- Department of Safety and Professional Services list as stated in the criteria in this section for all treatment methods; (baffling is not required),
- Above-ground storage containers installed and used in accordance with manufacturers' recommendations. In addition, above ground tanks shall be insulated or located within a heated structure.

c) All pumps installed in the tank shall be a two-inch minimum diameter discharge industrial grade trash or sewerage pump. When a submersible pump is installed, the pump intake shall be a minimum of 8 inches above the floor.

d) Install guard posts and other safety devices as necessary.

3. Specific Criteria for Ridge and Furrow

The ridge and furrow system includes a pretreatment tank from which the wastewater is delivered to a furrow infiltration area.

a. Siting Parameters

1) Soils – The in-situ soils shall at least have 50% of the particles passing a No. 200 sieve (P200 $\geq$ 50%), and a thickness of 3 feet below the furrow bottom. There shall be a 3-foot minimum separation distance from the

furrow bottom to bedrock and subsurface saturation.

2) The furrows shall be located a minimum of 50 feet from any private well and a minimum of 50 feet from channelized flow, surface water feature, or karst feature.

b. Design

1) Pretreatment – Pretreatment tanks shall be provided and shall be sized to provide a minimum three-day hydraulic retention time prior to discharge to the ridge and furrow system. The outlet from the pretreatment tank shall be gravity flow to a dosing tank or chamber which shall be separate from the pretreatment tank. A pump or siphon for pressure distribution of wastewater shall be located in the dosing tank or chamber.

2) *Load/Rest Cycle* – There shall be three days between dosing to any given furrow to allow sufficient resting for soil conditions to become unsaturated and aerobic prior to being loaded again.

3) System Size – The loading rate shall not exceed ½ gallon per square foot of the furrow bottom per day. This is equivalent to 1½ gallons per square foot of furrow bottom for a three-day cycle.

Furrow side slopes may not be steeper than 1:2 (1 horizontal: 2 vertical). The furrows shall be 1 foot deep and 1 foot wide at the bottom. Furrows shall be level and may be cut on the contour. Individual furrows shall not exceed 200 feet in length.

Ridgetops shall be a minimum of 6 feet wide to allow removal of vegetation by equipment.

4) Wastewater Distribution – The system shall be constructed in a manner which provides equal liquid distribution within the furrow. The header shall be designed to allow complete drainage after each wastewater loading.

When multiple furrows are employed, the wastewater distribution system shall be constructed so individual furrows within the system can be taken out of service for resting without interrupting the discharge to the remaining furrows.

c. Planting Medium

1) Compaction at the furrow bottom during construction shall be minimized.

2) Seedbed preparation, vegetation establishment and maintenance of vegetation on the ridges shall be in accordance with criteria specified in WI FOTG Standard 342, Critical Area Planting. Vegetation suited to wet conditions shall be used.

d. Specific Operation and Maintenance

1) Ensure the load/rest cycle is maintained.

2) At a minimum, twice per year mow the vegetation and remove the cut material from the site of ridge and furrow system.

3) Inspect the furrow bottoms annually and skim off accumulated solids. If infiltration decreases, rework the bottom of the furrow when dry.

4. Specific Criteria for Subsurface Absorption System – The subsurface absorption system includes a pretreatment tank followed by a subsurface absorption field using either a soil cover or an organic matter cover.

a. Siting Criteria

1) Soil Evaluation – Soil evaluations for subsurface absorption systems shall be conducted and reported by a Certified Soil Tester (CST) licensed through the Department of Safety and Professional Services.

The CST shall evaluate soils over a minimum area, calculated as follows:

$$\text{Area (ft}^2) = \frac{3 \times \text{wastewater production (gal/day)}}{0.2 \text{ gal/ft}^2/\text{day}}$$

A minimum of three test pits shall be completed. The CST shall provide a maximum soil application rate for all soil horizons, from the soil surface to either saturation, bedrock, or to a maximum depth of 8 feet. Soil application rates shall be based on soil texture and structure, shall be provided in units of gallons per square foot per day, and shall be currently published values from Department of Safety and Professional Services (SPS 383 Private Onsite Wastewater Treatment Systems, Table 383.44-2).

2) Separation Distance – The subsurface absorption system shall be located a minimum of 100 feet from any private water well and a minimum of 50 feet from channelized flow, a surface water feature, or karst feature.

b. Design Criteria

1) Pretreatment – Pretreatment tanks shall be provided and shall be sized to provide a minimum six-day hydraulic retention time prior to discharging to the subsurface absorption system.

2) Infiltrative Surface Design – The infiltrative surface shall be located at least 3 feet above subsurface saturation or bedrock. There shall be at least 2 feet of soil beneath the infiltrative surface that has a design soil application rate of greater than zero. The bottom of the infiltrative surface shall be level. Scarification of the infiltrative surface of the soil shall be done to reduce smear and shear.

The minimum size of the subsurface absorption system shall be 1.5 times the wastewater production rate, divided by the soil application rate at the infiltrative surface.

3) Distribution System – Gravity piping upstream of a soil absorption system shall be a minimum 4-inch diameter ASTM D1785 schedule 40 PVC pipe or equal, installed at a minimum grade of 1% or 1/8 inch per foot. It shall be buried to a depth sufficient to prevent damage from frost or traffic.

Pressure piping to a soil absorption system shall be a minimum 2-inch diameter ASTM D1785 schedule 40 PVC or equal, with a pump sized to produce a velocity in the pipe between two and five feet per second.

Distribution laterals shall be perforated with 1-inch diameter holes, spaced at a maximum of 3 feet, and installed such that the perforations are facing downward at the four and eight o'clock positions.

At least two 4-inch diameter perforated observation pipes shall be installed in each system at the upstream and downstream ends. The observation pipes shall be perforated within the clear washed stone zone and extend from the infiltrative surface to a minimum 1 foot above final grade and shall be capped.

Laterals shall be installed in either level trenches or in level beds.

a) Trenches shall be at least 6 feet wide and the distribution pipe shall be centered within the trench.

b) Beds shall be at least 6 feet wider and longer than the lateral distribution network, and the distribution network shall be centered in the bed. Distribution, laterals within a bed shall be spaced a maximum of 6 feet apart.

Laterals within a soil absorption system shall be 4-inch minimum diameter ASTM D1785 schedule 40 PVC; installed level or sloped in the direction of flow at a maximum of 2 inches per 100 feet. An air vent shall be connected to the upstream end of the subsurface absorption system piping.

4) Soil Covered Absorption System Bedding and Cover

a) Six inches of 1½- to 2½-inch washed stone shall be placed beneath the lateral piping for the entire width of the bed or trench. Pipes shall be stabilized by placing stone across the entire width of bed or trench to the top of the pipe.

b) A single layer of non-woven geotextile fabric shall be placed over the soil absorption system stone. Fabric shall meet the requirements of Wisconsin Construction Specification 13, Geotextiles, Class II fabric.

c) Backfill over the fabric shall consist of an 18-inch minimum thickness of topsoil, measured from the top of the lateral pipe.

d) The final finished grade of the subsurface absorption system shall be at least 1 foot above surrounding grade.

e) Immediately after completion of final grading, the surface topsoil material shall be stabilized by mulching and seeding.

5) Organic Matter Cover Absorption System Bedding and Cover

a) Six inches of 1½- to 2½-inch clear washed stone shall be placed beneath the lateral piping to a width of no less than 24 inches. Pipes shall be stabilized by encasing them in windrows of stone to a height 6 inches above the top of the pipe.

b) Backfill over the stone shall consist of either bark or woodchips a minimum thickness of 2 feet measured from the top of the stone above the lateral pipe.

c) The infiltrative surface shall be located a minimum of 30 inches below the ground surface or the top of a confining berm.

c. Specific Operation and Maintenance

1) Prevent traffic on the system.

2) Pump the pretreatment tank.

3) Maintain the thickness of the organic material cover.

5. Specific Criteria for Buffer Process

The buffer process includes a pretreatment tank from which wastewater is delivered to a sod area by an above-ground perforated distribution pipe located on the contour. Criteria is contained in WI FOTG Standard 635, Vegetated Treatment Area.

6. Milking Center Wastewater Treatment Considerations

Additional recommendations relating to design which may enhance the use of or avoid problems with this practice, but are not required to ensure its basic conservation function are as follows:

a. Consider using the companion documents located in Chapter 10 of the Agricultural Waste Management Field Handbook (AWMFH).

b. Dairy animals should not be in contact with the milking center wastewater to avoid disease transfer. Exclude dairy animals from the application site while liquid is present.

c. Utilize water, organic matter, and chemical conservation methods in the milking center.

d. Measures should be taken to control vectors (mosquitoes, flies, etc.) if they pose a problem.

e. Consideration should be given to storage of wastewater during winter months.

f. Settling basins may be installed prior to pretreatment tanks as a method to remove solids, such as lime, that may be difficult to remove from a tank.

7. Plans and Specifications

Plans and specifications shall be prepared in accordance with the criteria of this standard and shall describe the requirements for applying the practice to achieve its intended use. Plans shall include construction sequence, vegetation establishment, and management and maintenance requirements.

C. Specific Criteria for Feed Storage Areas and Feed Storage Leachate and Contaminated Runoff Control

Criteria contained in this standard may not be adequate to comply with the requirements for concentrated animal feeding operations (CAFO) designs. Designers shall consult with the Wisconsin Department of Natural Resources (DNR) on feed storage, feed storage leachate

collection, and contaminated runoff control for a CAFO.

This practice standard criterion does not apply to:

- industrial inputs or waste stored at an industrial facility (i.e., cannery, distillery, brewery);
- commercial feed mills;
- feeds considered dry (typically 40% moisture or less) within storage areas protected from precipitation;
- feed bunk/equipment; and
- self-feeding structures (non-mobile).

1. Specific Criteria Applicable to all Feed Storage Areas excluding *Tower Silos*

   a. Site Assessment

      A site assessment shall be conducted in accordance with V.A.2. for the proposed and existing livestock feed storage area, feed leachate and contaminated runoff control system, and transfer components. In addition, existing feed storage areas shall be investigated and evaluated for subsurface leachate presence and deficiencies in comparison to this standard. A minimum of two test pits shall be located immediately adjacent to the existing feed storage area and intercept the subsurface material. Test pits shall be distributed around the perimeter of the existing feed storage area.

   b. Separation from Subsurface Saturation or Bedrock

      The separation is determined to be the closest distance from any point on the top surface of the feed storage area liner to the feature from which separation is required. Refer to Tables 1, 2, and 3 for separation distances.

   c. Leachate and Contaminated Runoff from *Permanent Feed Storage Areas*

      Horizontal feed storage can lose leachate through the floor (subsurface discharge) and around the perimeter (surface discharge). The proposed system shall include collection components that intercept and direct leachate to storage. The system shall also include a subsurface collection system to direct leachate to storage unless a liquid-tight concrete or concrete-composite liner is used. A subsurface collection system shall consist of a suitable subgrade, liner, *leachate drainage layer*, and surfacing material. When a leachate drainage layer is required, it shall be placed above the liner and below the surfacing material of the feed storage area footprint and the apron. The profile and configuration of the collection system must allow gravitational flow to a low point (sump). Acceptable feed storage area liner systems are included in Tables 1, 2, and 3.

      If an existing feed storage area will be expanded as a part of the project, then a test pit or boring shall be performed. If leachate is found under the surface of existing feed storage area, a perimeter collection system shall be installed around the existing facility.

      1) All leachate shall be collected and conveyed to a transfer and/or storage system.

      2) The largest leachate volume is based on the harvest that will produce the largest silage weight. Estimate the leachate volume using ½ cubic foot leachate per ton of stored feed over a 30-day period. Unless determined otherwise, assume 60 pounds per cubic foot of stored feed (33.3 cu. ft./ton).

      3) Frequent Haul of Leachate– Storage or transfer systems that require manual pump out shall be sized to contain a minimum of 20% of the total leachate volume calculated in addition to any designed *first flush* collection.

      4) Contaminated runoff shall be delivered (via gravity or pump) to a vegetated treatment area meeting the criteria contained in WI FOTG Standard 635, Vegetated Treatment Area, or shall be collected and land applied according to a nutrient management plan.

      5) Transfer – All transfer components (pipes, reception structures, tanks, and channels) shall meet the criteria contained in WI FOTG Standard 634, Waste Transfer. Materials shall be corrosion resistant.

All pumps shall be capable of transferring effluent with fibrous material and be able to withstand acidic corrosive environment. Pumps shall be installed and used in accordance with the manufacturer's recommendations.

6) Storage – Facilities for storage of leachate and contaminated runoff shall be designed in accordance with WI FOTG Standard 313, Waste Storage Facility. Leachate and/or contaminated runoff are considered to be less than 2% solids. Materials shall be corrosion resistant.

d. Safety Design

Safety design shall identify and minimize the hazards to animals and people. At a minimum, safety design shall include the following, where applicable.

1) Warning signs and fences to notify of potential hazards.

2) Minimize the accumulation of gasses; provide ventilation for covered waste-holding structures to reduce the risk of inhalation of poisonous gasses, asphyxiation, or explosion.

Note: Adding leachate to manure can produce poisonous gasses.

If the facility includes a confined space, the confined space shall be configured in such a way that monitoring for hazardous gases, ventilation, observation of workers in the confined space, and extraction of workers from the confined space are all possible and practicable. Provisions of ASABE Standard EP 470 shall be followed.

e. Seeding and Mulching

Disturbed areas shall be seeded and mulched in accordance with WI FOTG Standard 342, Critical Area Planting.

f. Plans and Specifications

Plans and specifications shall be prepared in accordance with the criteria of this standard and shall describe the requirements for applying the practice to achieve its intended use. A construction plan and quality assurance plan are required.

g. Operation and Maintenance

An operation and maintenance plan shall be developed that is consistent with the purposes of this practice, intended life of the components, safety requirements, and the criteria for the design. At a minimum, the plan shall include:

- handling and disposal practices for waste feed;
- handling and disposal practices for snow storage associated with the feed storage area;
- the frequency for cleaning the floor of accumulated feed;
- the interval for removing accumulated solids from the system components;
- proper treatment and disposal practices for leachate and contaminated runoff; and
- the schedule of inspection of system components to insure proper operation.

Table 1
Earthen Feed Storage Area Liner System

	Soil Liner	Clay Liner
1. Liner		
• %Fines passing the #200 sieve	≥50%	≥40%
• Thickness	≥2 feet	≥1 feet
• Plasticity Index (PI)[Note1]	---	≥12
• Compaction Specification[Note 2]	---	WI Spec. 204
2. Leachate Drainage Layer[Notes 3, 6]		
• %Fines passing the #200 sieve	≤5%	
• Compacted Thickness	≥6 inches	
• Side slopes	3H:1V or flatter	
3. Surfacing Material Options		
• Concrete	≥5 inches total thickness	
• Asphalt Pavement	≥4 inches Asphalt in ≥ 2 lifts over 13 inches *crushed stone* subbase[Note 8].	
• Crushed Stone	a. 4 inches of crushed stone over 18 inches base course of angular rock[Note4], or b. 4 inches of crushed stone over 18 inches base course of round graded rock, over an additional 6 inches pit run sand-gravel[Note 4], or c. 4 inches of crushed stone over 8 inches base course of graded rock[Note4], over nonwoven geotextile.[Note5]	
• Soil[Note 6]	Increase earthen liner thickness by ≥2 feet	
4. Separation Distances[Note7]		
• Well Distance	100 feet[Note 9]	
• Sinkholes	400 feet	
• Subsurface Saturation	2 feet	
• Bedrock	2 feet	

Note[1] PI shall be determined by ASTM D4318, Atterberg Limits.

Note[2] NRCS FOTG, Section IV, Wisconsin Construction Specification 204, Earthfill for Waste Storage Facilities.

Note[3] Other open cell material placed under the full footprint (i.e., geonet-type products) may be used in lieu of granular soils.

Note[4] The base course layer can also be considered the leachate drainage layer.

Note[5] The geotextile shall be Class I, nonwoven and meet the requirements of Table 2 in Wisconsin Construction Specification 13, Geotextiles.

Note[6] When using the soil surfacing material option, the leachate drainage layer is not required.

Note[7] The separation distance is measured from the top of the earthen liner, and does not include surfacing material or the leachate drainage layer.

Note[8] The crushed stone subbase can also be considered the leachate drainage layer.

Note[9] NR 243 permitted facilities require 250 feet separation from wells.

Table 2
Flexible Membrane Feed Storage Area Liner System

1. Liner Material Note 1	Placed under crushed stone surface-60 mil High Density Polyethylene (HDPE), 60 mil Very Flexible Polyethylene (VFPE), 60 mil Linear Low Density Polyethylene (LLDPE), or 45 mil Ethylene Propylene Diene Monomer (EPDM) Placed under concrete or asphalt pavement surface-40 mil HDPE, 40 mil VFPE, 40 mil LLDPE, or 45 mile EPDM
2. Leachate Drainage Layer Note2	Shall extend to the edge of the footprint of the feed storage area
• % Fines passing the #200 sieve	≤5%
• Particle Size and Shape	≤3/16 inch rounded
• Compacted Thickness	≥6 inches
3. Surfacing Material Options	
• Concrete	≥5 inches total thickness
• Asphalt Pavement	≥4 inches Asphalt in ≥2 lifts over 9 inches crushed stone subbase Note 6 for subgrade soils Note 7 classified as SP, GP, SW, and GW. ≥4 inches Asphalt in ≥ 2 lifts over 13 inches crushed stone subbase Note 6 for all other subgrade soils Note 7 except organic soils.
• Crushed Stone	4 inches of crushed stone over 8 inches base course of graded rock Note3, over nonwoven geotextile Note4.
4. Separation Distances Note5	
• Well Distance	100 feet Note 8
• Sinkholes	400 feet
• Subsurface Saturation	2 feet
• Bedrock	2 feet

Note[1] HDPE, VFPE, and LLDPE shall meet Wisconsin Construction Specification 202, Polyethylene Geomembrane Lining. EPDM shall meet Wisconsin Construction Specification 205, Ethyl Propylene Diene Monomer (EPDM) Geomembrane Lining. All liners shall be installed according to manufacturer's recommendations.

Note[2] The leachate drainage material must be stable to resist sliding on the side slopes. In addition to the granular soils, other open cell material placed under the full footprint (i.e., geonet-type products) may be used. Flexible membrane liners shall be protected from puncture by use of suitable materials in the leachate drainage layer preparation.

Note[3] If the base course layer contains aggregates larger than 4 inches, the drainage layer shall be twice the depth of the largest aggregate.

Note[4] The geotextile shall be a minimum 12-ounce per square yard nonwoven. Increasing the drainage layer to 12 inches can substitute for the geotextile.

Note[5] The separation distance is measured from the top of the liner, and does not include surfacing material or the leachate drainage layer.

Note[6] The leachate drainage layer is required under the crushed stone subbase to protect the liner.

Note[7] The subgrade consists of the first five feet of soil under the crushed stone subbase. If any of the subgrade consists of soil other than SP, GP, SW, or GW, then 13 inches of crushed stone subbase must be used.

Note[8] NR 243 permitted facilities require 250 feet separation from wells.

Table 3
Concrete Feed Storage Area Liner System [Note 1]

	Concrete[Notes 2, 5]	Concrete-Soil Composite[Note 3]	
1. Soils (Directly Below Liner)			
• % Fines Passing The #200 Sieve	---	≥20%	≥20%
• Plasticity Index	---	≥7	---
• Thickness	---	≥1.5 feet	≥3 feet
• Compaction of Placed Material[Note 4]	WI Spec. 204	WI Spec. 204	WI Spec. 204
2. Separation Distances[Note 6]			
• Well Distance[Note 7]	≥100 feet	≥100 feet	≥100 feet
• Sinkholes	≥400 feet	≥400 feet	≥400 feet
• Subsurface Saturation	≥2 feet	≥3 feet	≥4 feet
• Bedrock	≥2 feet	≥3 feet	≥3 feet

Note[1] The liner material is also the surfacing material. The leachate drainage layer is the concrete surface.

Note[2] The concrete liner thickness and reinforcement shall be designed for the anticipated equipment loadings and crack control. Slabs on ground subject to equipment loads shall be designed in accordance with American Concrete Institute, ACI 360, "Design of Slabs-on-Ground," and Portland Cement Association Concrete Floors on Ground, Chapter 5. The concrete liner thickness shall be a minimum of 5 inches, contain distributed reinforcing steel and all contraction or *expansion joints* shall have imbedded non-metallic water stops in accordance with WI FOTG Wisconsin Construction Specification 4, Concrete. Steel shall be continuous through all *construction joints*.

Note[3] The concrete is in intimate contact with the soil, and the two work together to reduce seepage losses. The concrete liner thickness shall be a minimum of 5 inches and continuous reinforcement of #3 steel bars spaced at 18 inches on center each way. No expansion or *contraction joint*s are required. The concrete shall be placed in intimate contact with the foundation soils. If construction joints are required, steel shall be continuous through all construction joints and no waterstop is required. If the soil material below the floor meets Table 1 criteria, then Table 1 design criteria may be used.

Note[4] NRCS FOTG, Section IV, Wisconsin Construction Specification 204, Earthfill for Waste Storage Facilities.

Note[5] Joints having water stops shall be protected from differential movement by the use of dowels. Dowels shall be spaced no farther than the rebar oriented in the same direction. Thicken concrete an additional four inches at the joint and taper the concrete thickness back to the slab with a transition ratio of 1 inch of thickness change over 10 inches or longer run from the joint in each direction.

Note[6] The separation distance is measured from the top of the concrete.

Note[7] NR 243 permitted facilities require 250 feet separation from wells.

2. Specific Criteria, Tower Silos

   A collection system shall be installed to collect leachate from the tower silo when there is a risk of environmental impact to surface or groundwater.

   Floor drains shall be connected to the leachate collection or transfer system.

   If rainwater is collected, include this volume in the design. Rainwater may be diverted.

   All joints between the tower silo floor and foundation shall be sealed.

3. Specific Criteria – *Non-Permanent Feed Storage Areas*

   a. Feeds with over 75% moisture are not allowed on non-permanent areas.

   b. The storage site must be rotated annually, with a minimum of two consecutive years of non-use after a location is rotated out of use. The storage site must be moved a minimum of 50 feet from the previous location.

   c. The area where feed was stored must be re-vegetated after the feed is moved.

   d. The criteria in Table 4 shall be met.

Table 4
Non-Permanent Feed Storage Area Requirements

1. Hydrologic Soil Groups	**B, C, D**	**A**
2. Subsurface Separation Distance		
• Subsurface Saturation	≥ 3 feet	≥ 5 feet
• Bedrock	≥ 3 feet	≥ 5 feet
3. Surface Separation Distance		
• Wells	≥250 feet	≥250 feet
• Lakes	≥1,000 feet	≥1,000 feet
• Sinkholes, or other Karst Features	≥1,000 feet	≥1,000 feet
• Quarries	≥1,000 feet	≥1,000 feet
• Streams	≥300 feet	≥300 feet
• Wetlands and Surface Inlets	≥300 feet	≥300 feet
• *Open channel* flow	≥100 feet	≥100 feet
• Land Slope	≤ 6%	≤ 6%
• Floodplain (100 yr)	≥100 feet	≥100 feet

4. Considerations for Feed Storage Area Leachate and Runoff Control

   Additional recommendations relating to the design which may enhance the use of, or avoid problems with this practice, but are not required to ensure its basic conservation function, are as follows:

   a. A collection system to accept leachate may be installed around the perimeter of the feed storage area.

   b. Limit how much feed is exposed to precipitation while removing plastic and/or feed from storage. Cover waste feed with plastic or place under a roof to reduce leachate and contaminated runoff.

   c. Avoid locating feed storage areas and treatment systems in the 100-year floodplain without a flood analysis.

   d. When manual pump regulation is used, an alarm or indicator to mark the full level is suggested.

   e. A sediment basin should be considered to remove solids prior to entering a transfer system or vegetated treatment area. Design the sediment basin according to WI FOTG Standard 350, Sediment Basin.

   f. Line the top of the silage and the walls with plastic to exclude precipitation runoff from contacting the forage.

   g. Use dry feed ingredients on the floor and under the silage, or blend dry feed with wet silage, to absorb potential leachate.

   h. Use acid resistant materials (to pH 3.5) that will be in contact with feed leachate/seepage.

   i. Acid resistance measures should be taken for concrete and fiberglass tanks.

   j. Acid resistant reinforced concrete, with designed contraction joint spacing and a compacted subgrade, is recommended when surfacing a feed storage area with concrete.

k. Store plastic and weighting materials in a manner that avoids infestation by rodents and insects. Use cut tires or drill holes to reduce water accumulation. Mow weeds to discourage vermin colonization.

l. As generated, place waste plastic in a storage area where it will remain free of dirt and precipitation and be protected from transportation by the wind. Recycle or landfill the waste plastic on a regular basis.

m. When transferring leachate or contaminated runoff, consider installing a run time indicator on the pump.

n. Consider designing the feed storage area surface materials for expected equipment load or desired wear life.

o. Consider using the Wisconsin Asphalt Pavement Association (WAPA) 2001 Design Guide for designing the asphalt pavement.

p. Manage system for seasonal conditions. i.e. Collect more runoff in first month after feed is put up and/or during winter months when vegetated treatment area is dormant.

D. Specific Criteria for Alternative Waste Treatment Facilities not addressed in Sections B. or C.

1. Design

The waste treatment system provider shall complete and supply to the landowner/operator a detailed design of the facility/process clearly outlining the objectives and anticipated outcomes of implementation.

The design documentation shall include a process diagram containing, at a minimum, the following information:

- equipment, labor, and management capabilities;
- volumetric flow rates including influent, effluent, and recycle streams;
- waste load projections including volume, mass, and characteristics of the waste important to the waste treatment facility or process;
- unit process volumes and hydraulic retention times where appropriate;
- air emissions projections from the system;
- nutrient fate projections within the system;
- process monitoring and control system requirements as described below in the "Monitoring" section of the criteria; and
- an operation and maintenance plan that includes monitoring and reporting to demonstrate system performance over time.

Independent, verifiable data demonstrating results of the use of the facility or process in other similar situations and locations shall be provided.

Where use of a waste treatment facility or process to improve one resource concern negatively impacts another, impacts and mitigation measures, if required by state or local agencies, are to be documented. The mitigation measures shall become a required component of this practice.

2. Expected System Performance

The expected system performance shall be clearly documented prior to system installation. At a minimum, the expected system volumetric flow rate, expected macro-nutrient reductions or change in form, expected pathogen reductions, gaseous ammonia and hydrogen sulfide emissions reductions (or increases) shall be documented.

3. Operating Costs

Where components of a facility or process are not described in a current NRCS practice standard, the system provider shall furnish an annual estimate of operating costs for the system. Operating costs not based on actual systems data shall be clearly identified as estimates.

4. Monitoring

Equipment needed to properly monitor and control the waste treatment facility or process shall be installed as part of the system. Process control parameters to be

monitored shall include those parameters identified in the design documentation. Parameters considered critical to proper system operation shall be identified in the Operation and Maintenance Plan. Run status of critical equipment and unit processes shall be monitored.

5. Byproducts

Implementation of a waste treatment process or operation of a waste treatment facility shall not result in discharge of byproducts harmful to the environment.

All byproducts shall be handled and stored in accordance with the criteria contained in WI FOTG Standards 634, Waste Transfer, and 313, Waste Storage Facility.

Byproducts land applied to supply plant nutrients shall meet the criteria in WI FOTG Standard 590, Nutrient Management.

Any unmarketable or unused byproducts shall be handled and disposed of in accordance with all applicable federal, state, and local laws and regulations. A plan for dealing with such byproducts shall be prepared and approved by NRCS prior to utilization of the process or installation of the waste treatment facility, and shall include a listing of any permits or permissions required for the execution of the plan.

Byproducts shall be recycled to the extent possible without causing a hazard to the environment.

VI. References

USDA, NRCS Wisconsin Field Office Technical Guide (FOTG), Section IV, Practice Standards and Specifications.

USDA, NRCS National Engineering Handbook, Part 651, Agricultural Waste Management Field Handbook and Companion Documents.

USDA, NRCS, National Engineering Handbook, Part 637, Environmental Engineering, Chapter 3, Constructed Wetlands.

USDA, NRCS, National Soil Survey Handbook, Title 430-VI.

Wisconsin Department of Safety and Professional Services, Safety and Building Division Plumbing Products Database: http://dsps.wi.gov.

ASTM D2488, Standard Practice for Description and Identification of Soils (Visual-Manual Procedure).

ASTM D4318, Standard Test Methods for Liquid Limit, Plastic Limit, and Plasticity Index of Soils.

American Concrete Institute, ACI 360, Design of Slabs-on-Grade.

American Society of Agricultural and Biological Engineers (ASABE) Standard EP 470, Manure Storage Safety.

USGS, Regional Assessment of Groundwater Quality in the Glacial Aquifers System: http://water.usga.gov/nawqa/studies/praq/glacaq/indes.html.

2001 WAPA Design Guide, Wisconsin Asphalt Pavement Association Web Site: www.wispave.org.

VII. Definitions

Bedrock (V.A.2.b.) – The solid or consolidated rock formation typically underlying loose surficial material such as soil, alluvium or glacial drift. Bedrock includes but is not limited to limestone, dolomite, sandstone, shale and igneous and metamorphic rock.

Note: Although solid or consolidated bedrock can sometimes be removed with typical excavation equipment, these materials are included in the above definition.

Channelized Flow (V.B.1.c.) – Water movement in a surface drainage feature including, but not necessarily limited to: swales, draws, grassed waterways, ditches, gullies, creeks, or rivers.

Confined Space (V.A.6.) – Confined Space is a space that 1) contains or has the potential to contain a hazardous atmosphere; 2) is large enough and so configured that a person can bodily enter; 3) has limited or restricted means for entry or exit; and 4) is not designed for continuous human occupancy.

Consistency (V.A.1.) – Consistency of waste material may include % solids, viscosity, and general physical state of the material.

Construction Joint (Table 3, Note 2) – These joints are used where a fresh pour of concrete abuts an existing recent pour. Construction joints where the

steel is continuous through the joint are considered to be monolithic and liquid tight, if constructed properly.

Contaminated Runoff (II.) – Runoff that has come through or across a feed storage area. It generally includes the runoff and any sediment, feed, or other material carried in the runoff. It contains lower concentrations of contaminants than leachate from feed or manure.

Contraction Joints (Table 3, Note 3) – Contraction joints, often called control joints, are used to control the location of cracks caused by concrete shrinkage during setting and thermal changes.

Crushed Stone (Table 1) – 100% passing the ¾-inch sieve and 10% maximum passing the No. 200 sieve.

Cultural Resources (V.A.2.a.) – Cultural resources are the traces of any past activities and accomplishments of people. They include tangible traces such as historic districts, sites, buildings, structures, historical documents and cemeteries. They also include traces of less tangible objects such as dance forms, aspects of folk-life, cultural or religious practices, and some landscapes and vistas.

Drainage System (V.A.3.c.) – Water conveyance measures of specified capacity, location, and material that insure the removal of water to a free outlet.

Expansion Joints (Table 3, Note 2) – These joints are used to prevent crushing of abutting concrete or other structural units due to compressive forces developed during expansion caused by high temperature.

Feed Storage Area (II.) – An area used to store livestock feed. Livestock feed may include corn silage, haylage, and industrial by-products (i.e., distillers grain, brewers grain, candy, pizza crust, bakery waste, cotton seed, soy bean meal, animal fats, blood meal, fish meal, cannery waste, beet pulp, citrus pulp, soy hulls, corn midlings, whey, potatoes, grocery store vegetables). This is the area defined by the outside edge of the surface of where the feed is stored, including the apron. This area does not include feed stored in bags.

First Flush (V.C.1.c.3)) – The initial contaminated runoff volume, which typically contains higher concentrations of contaminants than runoff produced during the remainder of the storm event.

Flood Prone Areas (V.A.4.) – These include areas delineated as floodplains on Federal Emergency Management Agency (FEMA) maps, or local floodplain maps as well as areas along perennial streams (blue lines) shown on the United States Geologic Survey quadrangle sheets that may be subject to out of bank flows.

Footprint (*V.A.2.b.2)*) – This is the horizontal area within the perimeter of a facility liner, or the perimeter of a work surface that may cover a liner. For a liquid or solids containment facility, the footprint is the maximum horizontal extent of containment. For a liquid impoundment facility or pond, the footprint is normally defined by the inside top of the embankment. For a solids storage facility, the footprint is normally defined by the edge of the pad, the curb on a pad, or the inside surface of bunker walls.

Gleyed Soil (V.A.2.b.3)) – A soil condition resulting from prolonged soil saturation, which is manifested by the presence of bluish or greenish colors through the soil mass or in mottles (spots or streaks) among the colors. Gleying occurs under reducing conditions, by which iron is reduced predominantly to the ferrous state.

Karst (V.A.2.c.) – Areas of land underlain by carbonate bedrock (limestone or dolomite). Typical land features include sinkholes, disappearing streams, closed depressions, blind valleys, caves, and springs. See the companion document to Standard 313, in Chapter 10 of the AWMFH for additional discussion of karst features.

Leachate (II.) – Concentrated liquid which has percolated through or drained from animal feed. It contains much higher concentrations of contaminants than Contaminated Runoff.

Leachate Drainage Layer (V.C.1.c.) – Material that allows leachate to flow to a collection point.

Load/Rest Cycle (V.B.3.b.2)) – A schedule of operation in which a certain volume of waste is loaded on a portion of the treatment system and then that portion is rested to allow the soil to re-aerate and the soil micro-organisms to break down the waste material.

Milking Center (III.) – Facility for harvesting cooling and storing milk from dairy cows, sheep, or goats. The facility can include animal holding area, milking parlor, milk house, milking equipment, and washing equipment. Excluded from the milking center is animal housing.

Milking Center Wastewater (III.) – Consists of wash water used to clean the milk harvesting and milk

cooling equipment. Other contaminated sources of wastewater (water softener) and wash water used to clean the floors and walls can be included in the combined flow of the milking center wastewater discharge. Wastewater from the floor of the holding area is excluded from treatment systems specified by this standard. Clean discharge water sources (plate cooler, roof water) and sanitary wastewater (toilets, sinks, clothes laundry) must be excluded from the treatment system.

Non-permanent feed storage area (V.C.3.) – An area used to store livestock feed for no more than 12 months at one location followed by a minimum of two consecutive years of non-use.

Open Channel (Table 4) – Open channels are assumed to begin where surveyed cross section information has been obtained, where channels are visible on aerial photographs, or where blue lines (indicating streams) appear on the United States Geological Survey (USGS) quadrangle sheets.

Perched Conditions (V.A.3.c.) – Perched conditions describe a soil moisture regime where saturated soil is located above unsaturated soil.

Permanent feed storage area (V.C.1.c.) – An area used to store livestock feed for more than 12 months at one location.

Sinkholes (V.A.2.c.) – Closed, usually circular depressions which form in karst areas. Sinkholes are formed by the downward migration of unconsolidated deposits into solutionally enlarged openings in the top of bedrock.

Source Control (V.A.1.) – Management practices and/or equipment that reduce the volume and strength of the generated milking center waste stream to facilitate its treatment. Further explanation of source control measures to reduce volume, strength and reduce contaminant levels are found in the companion documents in the WI supplement to Chapter 10 of the NRCS AWMFH.

Spreading Plan (V.B.1.b.) – A plan that prevents runoff, excessive accumulation of nutrients in the soil, and spreading of wastes in karst areas and areas of concentrated flow.

Surface Water Feature (V.A.2.a.) – Lakes, ponds, wetlands, open channel flow, grassed waterways, streams, sinkholes and karst features.

Tower Silo (V.C.1.) – Vertical high moisture feed storage structure confined on the sides and bottom.

Vegetated Treatment Area (V.A.2.b.2)) – A vegetated area designed to treat contaminated runoff from feed storage areas by physical, chemical and biological means.

Waste Feed (III.) – Spilled, spoiled or unused feed not suitable for livestock consumption. Includes feed mixed with snow and other contaminants.

WASTE TRANSFER

(No.)
Code 634

Natural Resources Conservation Service
Conservation Practice Standard

I. Definition

A system using structures, conduits or equipment to convey byproducts (wastes) from agricultural operations to points of usage.

II. Purposes

To transfer waste (manure, *manure processing derivatives*[1], *contaminated runoff*, and *wastewater*, which includes milking center waste, *leachate* from feed holding areas, and similar waste materials) in a manner which safeguards the environment. It includes transfer through a *hopper*, *reception structure*, a pump, *channel*, or permanently installed conduit to:

- A waste storage facility,
- A waste treatment facility,
- A wastewater treatment system,
- A loading area,
- Cropland.

III. Conditions Where Practice Applies

The waste transfer component is part of a planned agricultural waste management or comprehensive nutrient management system.

This practice standard applies where manure and other waste is generated by livestock production or processing, and a permanently installed conveyance system is necessary to transfer material from the source to a storage facility, treatment facility or system, loading area, or cropland. This includes moving nutrients from one geographical area with excess nutrients to a geographical area that can utilize the nutrients in an acceptable manner.

This practice standard does not apply to conveyance systems using equipment or mechanisms such as *gutters*, barn cleaners, alley scrapers, or belts for moving manure in the housing facility to the manure transfer system.

This practice standard does not apply to transfer by vehicles or temporary surface pipe or hoses from the storage facility, treatment facility or system, or loading area to the field or another storage facility.

IV. Federal, Tribal, State and Local Laws

Waste transfer systems shall comply with all federal, tribal, state and local laws, rules or regulations or permit requirements governing waste transfer. The operator is responsible for securing required permits. This standard does not contain the text of the federal, tribal, state or local laws.

V. Criteria

The following minimum criteria shall apply to all waste transfer designs.

A. General Criteria

1. Management Assessment

A management assessment shall be conducted, documented, and incorporated into the design. The assessment shall be performed with the owner/operator to explore options and to determine the purpose of transfer components, available resources, manure handling practices, and waste characteristics.

The management assessment shall address the following:

a. Waste Characterization.

   1) Sources, volumes and consistency of manure, contaminated runoff, manure processing derivatives, leachate, wastewater, and other inputs to the waste transfer system.

   2) Animal types.

   3) Bedding types and quantity.

b. Waste handling, transfer methods and duration.

c. Facility waste removal methods.

d. Access needs and limitations.

[1] Words in the standard that are shown in italics are described in VIII. Definitions. The words are italicized the first time they are used in the text.

e. Safety needs.

f. Labor and equipment needs.

g. Odor production concerns and control strategies.

h. Aesthetics and animal health.

i. Provisions for facility expansion.

2. Site Assessment

A site assessment shall be conducted, documented, and incorporated into the design. The assessment shall be performed to determine physical site characteristics that will influence the placement, construction, maintenance, and environmental integrity of a proposed waste transfer system. The assessment shall include input from the owner/operator. The site assessment shall include the following.

a. Locations and elevations of buildings, roads, lanes, soil test pits, property lines, setbacks, easements, wells, springs, floodplains, surface waters, surface drains, drain tile, utilities, overhead lines, *cultural resources*, and wetlands.

b. Subsurface investigations for reception structures, channels and transfer pipes in the *animal production area* shall be located such that no portion of the structure, channel or pipe is greater than 100 feet from a subsurface investigation point. The investigation shall extend to a minimum depth to ensure required separation distances for the proposed component are achieved.

c. Additional soil investigations shall be conducted if there are substantial variations within or between the soil investigations that may affect the design.

d. Subsurface investigation logs shall include:

1) Soil layers described with respect to thickness, texture using the Unified Soil Classification System (USCS), Munsell color, presence and color of redoximorphic features (soil mottling), *gleyed soil* and moisture condition.

2) The elevation of *bedrock* and bedrock type, if encountered, such as sandstone, limestone, dolomite, or granite.

3) The upper elevation of all saturated layers encountered shall be recorded in the field.

e. Subsurface investigations shall include a narrative describing the design limitations that have been derived from the soils data.

3. Separation from Subsurface Saturation or Bedrock

The separation is determined to be the closest distance from any point on the inside surface of the component to the feature from which separation is required.

The definition of subsurface saturation is not intended for application in any context other than to protect components installed from hydrostatic loadings.

a. For the purposes of this standard, factors used to identify subsurface saturation shall include observed saturation, gleyed soil, gray mottles, and soil color in conjunction with nearby surface water features. The highest subsurface saturation elevation identified in a test pit/soil boring will be identified by any of the following soil properties.

1) Free water or wet soil identified by glistening, due to the slow release of water.

2) Gleyed soil, that may extend uninterrupted from an observed free water surface.

3) The presence of distinct gray redoximorphic features with a chroma of 2 or less based on Munsell color charts.

4) Depleted matrices having a value of 4 or more and chroma 2 or less based on Munsell color charts. In some cases soil parent materials have a natural color of 2 chroma or less or gleyed color that is not due to saturation. In these cases other indicators may be used: landscape

position, elevation or soils in relation to nearby water features.

b. In soils not conducive to mottling, such as sand, the subsurface saturation elevation shall be established by evaluating the soil morphology of the soil profile. Other indicators that may be considered in making the determination are the position of the soil in the landscape, topography, nearby wetlands and well construction logs.

c. Subsurface saturation, if encountered, shall not be drained (or have water-bearing layers removed) except as described for *perched conditions*. Perched conditions may be drained or water-bearing materials removed to achieve separation distances in the tables and relieve hydrostatic loads. Documentation to demonstrate that subsurface saturation is perched and of drainable extent or its effects otherwise eliminated shall be included in the site assessment. All *drainage systems* shall drain by gravity. The effect of temporary tailwater on the component and the effects of outletting to perennial and intermittent waterways shall be evaluated. A drainage system shall be located around the outside perimeter of the component footprint and drain to a surface outlet.

d. If the site assessment indicates artesian features, a hydrogeologic and geotechnical evaluation of the site shall be completed to determine the site suitability for in-ground components.

e. Excavation of bedrock is permitted to achieve the required separation distance as specified in the tables. Bedrock shall not be removed by blasting. The exposed bedrock surface shall be evaluated to ensure a structurally sound base. Fractures or voids shall be treated to prevent migration of soil material. The surface of excavated bedrock shall have a positive grade, minimum of 1 percent, under and away from the component, as to prevent any significant ponding on the rock surface unless otherwise stated in specific criteria sections. If bedrock is excavated, the material placed between the component and the bedrock shall have a minimum of 20% passing the #200 sieve.

4. Flood Prone Areas

a. Reception structures, channels and hoppers located in *flood prone areas* shall be protected from inundation, structural damage and instability from the maximum water elevation resulting from the 25-year, 24-hour rainfall event.

b. Waste transfer components located within the maximum water elevation resulting from the 25-year, 24-hour rainfall event, shall be designed for additional loadings such as hydrostatic pressures and buoyancy/uplift. These systems shall also be evaluated for additional protections such as automatic shutoff systems, backflow prevention valves or check valves, watertight connections, main power disconnects, submersible type splices on electrical lines, etc. Any vents, power supplies, and automatic or manual shutoff controls shall be located at or above the maximum water elevation resulting from the 25-year, 24-hour rainfall event so that access is possible.

5**. Safety**

The system design shall identify and minimize the hazards to animals and people during construction and operation. Waste transfer designs may create *confined spaces*, which can pose significant hazards to people. At a minimum, a design shall include the following.

a. Open structures shall be provided with covers or barriers such as gates, safety fences (see Wisconsin NRCS Field Office Technical Guide, Section IV (WI FOTG), Conservation Practice Standard 382, Fence), etc., to restrict access of animals or people. Include warning signs as necessary.

b. Tank covers shall be designed to withstand both dead and live loads. The live load values for covers contained in ASAE EP378.4, Floor and Suspended Loads on Agricultural Structures Due to Use, and in ASAE EP393.3, Manure Storages, shall be the minimum used. For vehicles or equipment in excess of 20,000 pounds

gross vehicle weight, the actual axle load shall be used.

c. In push-off areas, barriers shall be installed to prevent the accidental entry of tractors or other equipment.

d. Warning signs shall be provided for waste transfer systems as necessary to warn of the danger of entry and to reduce the risk of explosion, poisoning, or asphyxiation. Appropriate signage shall be visibly located at all access points.

e. Ventilation of enclosed areas shall be provided as necessary to reduce the risk of explosion and asphyxiation.

f. Waste transfer lines from enclosed buildings shall be provided with a water-sealed trap and vent or similar devices where necessary to control gas entry into buildings.

g. A minimum of one in-line manual valve in the transfer pipe, located as close to the storage facility as practical, shall be installed when the top of the storage facility is higher than the top of the transfer structure. An in-line valve is not required if the transfer pipe does not penetrate the liner and terminates at an elevation above the top of the storage facility, thus providing an air gap.

h. Confined spaces where human entry may occur shall be designed and operated in compliance with the provisions contained in ASABE EP470, Manure Storage Safety. Covered channels and reception structures that require humanly occupied equipment operated in the transfer system for cleaning shall not be utilized because they do not meet this safety standard.

6. Failure Analysis

The overall functionality of the waste transfer system shall be evaluated for possible malfunctions that could lead to a release of the waste transfer system contents outside the normal operational confines of the waste management system. Identified potential failures should be addressed in the design phase, the operation and maintenance plan, and the emergency response plan**.**

7. Construction Plans and Specifications

Construction plans and specifications for installing waste transfer systems shall be in accordance with this standard and shall describe the requirements for applying the practice to achieve its intended purpose, including the maximum design *working pressure* and the *transfer system pressure rating* of each transfer system. Construction plans and specifications shall include a location map, plan view, profiles, cross sections, details and specifications to ensure that the project can be properly constructed.

8. Engineering Design Documentation

Engineering design documentation shall be prepared in compliance with the Design Deliverables in the Wisconsin NRCS Statement of Work for the WI FOTG Standard 634, and shall demonstrate that the criteria in the NRCS practice standard have been met. Design documentation shall include all substantiating data, assumptions, computations and analyses, and the maximum design working pressure and the transfer system pressure rating of each transfer system.

9. Quality Assurance Plan

A quality assurance plan is required that describes the type and frequency of testing, the items requiring inspection, the documentation required, and the qualifications of the person doing the work.

The quality assurance plan shall address the following items:

a. Site and Contact Information.

b. Introduction and Project Description – Narrative Format.

c. Responsibilities of Key Parties.

d. Pre-Construction Meeting.

e. Items Requiring Inspection, Observation, and Testing.

f. As-built Plans and other Certification (Attesting) Documentation.

10. Operation and Maintenance

An Operation and Maintenance (O&M) Plan shall be prepared and reviewed with the landowner and/or operator responsible for the application of this practice. The O&M Plan shall provide specific instructions for proper operation and maintenance of each component of this practice and shall detail the routine maintenance needed to assure the effectiveness and useful life of this practice. The O&M Plan shall be consistent with the purpose of this practice, safety requirements, criteria for design and the Operation and Maintenance Plan in WI FOTG Standard 313, Waste Storage Facility.

At a minimum, the O&M Plan shall include the following items:

a. System information including the general system description, assumed system performance, maximum design working pressure and the transfer system pressure rating of each transfer system.

b. Safety and emergency response including actions to address potential component failures identified in the waste transfer system failure analysis and an emergency response plan for actions needed to address spills and overflows.

c. Operating procedures including: typical operating procedures, procedures for proper start-up and shutdown for the operation of pumped transfer systems and valve operation sequence if applicable.

d. Maintenance items including: scheduled routine maintenance required by the component manufacturer, procedures for cleaning and unplugging pipe, and inspection and maintenance of all safety items.

B. Specific Criteria

1. Reception Structures, Channels, Hoppers, and Pumps

Reception structures, channels, hoppers, and pumps shall meet the following criteria.

a. Joints and appurtenances shall be liquid tight.

b. Separation distances criteria in Table 1 shall be met.

c. Reception structures shall be sized as follows:

1) Reception structures that are part of a manure transfer system.

a) Reception structures not receiving runoff and/or precipitation shall be sized to contain a minimum of one full day's manure production, plus six inches extra depth for safety; or

b) Reception structures receiving runoff and/or precipitation shall be sized to contain a minimum of one full day's manure production, plus six inches extra depth for safety, and the volume of runoff and/or precipitation from a 25-year, 24-hour rainfall event. The increase in storage volume due to runoff and/or precipitation may be reduced if a portion of this runoff and/or precipitation can be safely routed to and contained within the waste management system.

2) Reception structures that are part of a contaminated runoff or wastewater management system.

a) Reception structures not receiving runoff and/or precipitation shall be sized according to the appropriate conservation practice standard and design needs of the system; or

b) Reception structures receiving runoff and/or precipitation shall be sized according to the appropriate conservation practice standard and design needs of the system, plus the volume of runoff and/or precipitation from a 25-year, 24-hour rainfall event. The increase in storage volume due to runoff and/or precipitation may be reduced if a portion of this

runoff and/or precipitation can be safely routed to and contained within the waste management system.

d. Openings to structures to receive material from alley scrape collection shall be a minimum of 9 square feet with one dimension no smaller than 4 feet. The opening shall be equipped with a grate designed to support the anticipated loads, or otherwise protected to prevent accidental entry.

e. Cast in place reception structures and channels shall be designed for static and dynamic loading, including uplift (buoyancy). Reception structures and channels shall be designed to withstand soil and hydrostatic loading in accordance with WI FOTG Standard 313, Waste Storage Facility. Covers, when needed, shall be designed to support the anticipated dead and live loads.

f. Prefabricated reception structures and channels used to transfer manure and manure processing derivatives shall be designed according to the structural and soil criteria in WI FOTG Standard 313, Waste Storage Facility.

g. Prefabricated reception structures used to transfer only wastewater and/or contaminated runoff are not required to meet the structural and soil criteria in WI FOTG Standard 313, Waste Storage Facility, but shall meet, at a minimum, the following requirements:

The structure shall be currently listed in the Wisconsin Department of Safety and Professional Services (DSPS), Safety and Building Division, Plumbing Products Database.

1) The structure shall comply with all stipulations listed in the Wisconsin DSPS approval that relate to liquid tightness and/or structural strength.

2) The structure shall be located a minimum of 15 feet from established or planned roadways, or designed for anticipated loads.

3) No structural modifications to prefabricated structures, such as pump attachments, shall be made unless approved in writing by the manufacturer.

h. Pre-manufactured manholes shall conform to the criteria in ASTM C478 and the base section shall have the riser wall and base slab cast monolithically as a single unit.

i. Pumps shall be sized to transfer waste at the required system head and flow rate. The type of pump shall be based on the consistency of the waste and the type of bedding used, if applicable. Requirements for pump installations, including connecting appurtenances, shall be based on manufacturer's recommendations. Pumps installed for transfer shall meet the requirements of WI FOTG Standard 533, Pumping Plant.

l. When penetrating waste storage liners, the performance and integrity of the liner shall be maintained. All penetrations and restraints shall meet the criteria in WI FOTG Construction Specification 634, Waste Transfer (Spec. 634).

m. When solid/liquid waste separation is planned, a filtration or screening device, settling tank, settling basin, or settling channel used to separate a portion of solids from the manure or liquid waste stream shall be designed in accordance with WI FOTG Standard 632, Solid/Liquid Waste Separation Facility.

Table 1
Separation Distances for Reception Structures Hoppers, Channels, Pumps, and Pipes

Transfer Components	Bottom of Pump, Floor Surface, or Pipe Invert Relative to Bedrock	Bottom of Pump, Floor Surface, or Pipe Invert Relative to Subsurface Saturation	Well, Spring, and Reservoir Separation Distance[Note 1]
Pumps			
Pumps encased in concrete	≥ 6 inches	Bottom of pump maximum depth into saturation shall be 2 feet	≥ 50 feet
Pumps housed in a drywell [Note 2]	≥ 6 inches	Floor may be at the subsurface saturation level	≥ 50 feet
Reception Structures and Hoppers			
Capacity < 6,000 gallons	≥ 1 foot	Floor may be at the subsurface saturation level[Note 3]	≥ 50 feet
Capacity ≥ 6,000 gallons	≥ 2 feet	≥ 2 feet (≥1 foot for sumps)[Note 3]	≥ 100 feet
Channels			
(≥ 2 foot depth)	≥ 2 feet	≥ 2 feet (≥1 foot for sumps)[Note 3]	≥ 100 feet
Pipes			
All	≥ 6 inches	No restrictions	≥ 25 feet

[Note 1] Well, spring, and reservoir separation distances are in accordance with NR 812, Well Construction and Pump Installation. Items not listed in the table shall also be in accordance with NR 812. DNR-permitted animal feeding operations need to follow the 250-foot well separation distance requirements of NR 243.

[Note 2] Drywells contain pump hardware and are not intended to contain waste.

[Note 3] Separation distances from subsurface saturation is not required if the reception structure, hopper, or channel is designed to withstand anticipated hydrostatic loads and uplift (buoyancy).

2. Pipes

This applies to systems using pipes to carry waste to reception structures, waste storage facilities, waste treatment facilities, wastewater treatment systems, loading areas or cropland. Transfer pipe and severe service transfer pipe shall meet the following criteria.

a. Transfer Pipe

Transfer pipes shall meet the following criteria:

1) Design of transfer pipe systems shall be in accordance with sound engineering principles taking into account the static and dynamic loads on the pipe, working pressure, transfer system pressure rating, site conditions, required capacity, and other applicable design factors. Pipe shall be designed based on the properties of the material to be transferred and shall convey the required flow without plugging. Working pressure shall not exceed 72% of the transfer system pressure rating.

2) Flow velocity for pumped systems, other than pumps which produce pulsating flow, shall be between 3 feet per second and 6 feet per second to minimize settling of solids. Flow velocity may exceed 6 feet per second if the transfer system design takes into account requirements for joints and other appurtenances that accommodate the velocity and any potential loss of pipe integrity due to internal erosion by the materials being transported.

3) Pipe exposed to sunlight shall be made of materials, or otherwise protected, to withstand ultraviolet radiation throughout the intended life of the pipe.

4) Pipe at risk to being damaged shall be identified by fences or markers placed along the pipe.

5) Pipe shall be installed in accordance with the requirements of the Wisconsin FOTG Specification 634, or equivalent specification. All joints, couplings and appurtenances shall be liquid tight in accordance with the manufacturer's specifications and Wisconsin FOTG Specification 634.

6) Pipe shall meet the criteria in Wisconsin FOTG Specification 634. Pipe of equivalent strength, durability, and liquid tightness are acceptable.

7) Pipe and appurtenances shall be compatible with the working pressure of the system. Air and water pressures used to clear the pipe shall not exceed the transfer system pressure rating. A warning sign shall be placed on all risers indicating the transfer system pressure rating. Pressure pipe shall be matched to the pump connected to it, and pipe working pressures shall be no less than the *pump shut-off head;* otherwise, pressure relief (designed per Section V.B.2.b.(2) below) shall be provided near the pump.

8) Thrust control for all buried pressure pipe 4 inches and larger in diameter shall be provided at all angled fittings and valves, and be designed in accordance with standard engineering practices.

9) Pipe penetrating waste storage liners, reception tanks, or channels shall be installed so that the performance and integrity of the liner is maintained. Pipes shall be continuous through walls. The section of pipe that penetrates the liner of a waste storage facility shall be a minimum of 10 feet in length and shall be supported with a cast-in-place concrete restraint. All joints within 25 feet of where the pipe penetrates the inside surface of the waste storage facility (measured along the length of the pipe) shall have a mechanical and/or concrete restraint. All penetrations and restraints shall meet the criteria in Wisconsin FOTG Specification 634.

10) Pipe may be installed in any location within the soil profile regardless of subsurface saturation or bedrock elevations. Pipe subjected to hydrostatic forces shall be protected from uplift. Pipe shall have at least 6 inches of bedding providing separation from bedrock. Excavation of bedrock is acceptable. Storage structure liners shall be protected from hydrostatic pressures that may be caused by preferential flow paths along installed pipe.

11) If cold weather operation is planned, transfer pipe shall be: insulated, heated, buried below anticipated frost depth, constructed of freeze tolerant material, or installed such that it can be evacuated after each use by draining or using compressed air. Buried pipe shall be protected from freezing with either a minimum of 4 feet of soil cover or an equivalent amount of soil and insulation, unless the pipe is evacuated after each use.

12) *Clean-out access* shall be provided at a maximum interval of 150 feet along the pipe length, or a maximum interval of 300 feet along the pipe length if bi-directional clean-outs are used, to allow for removal of settled solids or obstructions.

    A minimum of one in-line manual valve in the pipe, located as close to the storage facility as practical shall be provided if any clean-out riser is lower than the top of the waste storage structure.

    Clean-out access is not required for pipes transferring wastewater, contaminated runoff, and similar wastes with a low solids content or pipes used for transfer to cropland for application. A method to clean these pipes in the event of plugging shall be incorporated into the design and described in the Operation and Maintenance Plan.

13) Pipe shall be installed with appropriate backflow prevention devices to prevent contamination of private or public water supply distribution systems and groundwater.

14) Air vents and vacuum relief valves shall be provided where necessary to eliminate air locks, as well as to protect the pipe against negative pressures.

b. Severe Service Transfer Pipe

Severe service transfer pipe includes pressure pipes supplying flush water to gravity flume systems and pipe extending to cropland application. It does not include gravity transfer pipe. In addition to the transfer pipe criteria in V.B.2.a (1)-(12), severe service transfer pipe shall meet the following criteria:

1) A check valve shall be provided near the outlet of each pump except when backflow is incorporated into the design of the transfer system.

2) A pressure relief valve shall be provided near the pump(s) to protect the pipe against pump shut-off head due to a blockage (unless the pump shut-off head is less than the working pressure of the transfer system). A pressure relief valve or properly sized water hammer arrestor shall be provided on the pressure side of shut-off valves to protect against water hammer due to the sudden closing of a valve. Pressure relief valves shall be no smaller than ¼-inch nominal size for each inch of the pipe diameter. Pressure relief valves shall be set to open at a pressure no greater than 5 lb./in^2 above the transfer system working pressure.

3) Air and water pressures used to clear the pipe shall not exceed the transfer system pressure rating. A warning sign shall be placed on all risers indicating the transfer system pressure rating.

4) Pipe shall be pressure tested prior to being placed into service. The test protocol and results shall be included

in the as-built documentation. The pipe shall be tested for leaks in accordance with Wisconsin FOTG Specification 634. Pipeline used for transferring material to an irrigation system shall meet the requirements of WI FOTG Standard 430, Irrigation Water Conveyance, Pipeline.

c. Gravity Transfer System

This criteria applies to systems using pipe to carry waste to reception structures, waste storage facilities, waste treatment facilities, wastewater treatment systems, loading areas or cropland. Gravity transfer pipe and structures shall meet the following criteria.

1) There shall be no gravity outlets used to empty waste storage facilities.

2) There shall be no gravity outlets from transfer systems to load-out areas without secondary containment volume greater than the transfer system capacity.

3) Gravity discharge pipe used for transferring waste from one storage facility to another shall have a minimum of two shut off valves if one facility can release a volume that would exceed the maximum operating level of the receiving facility. The valves shall be located as close to each of the storage facilities as practical. One valve shall be manually operated.

4) Gravity transfer pipe shall follow all previous transfer pipe criteria (V.B.2.a 1)-14)) plus the following additional criteria listed in Table 2.

Table 2
Summary of Criteria for Gravity Transfer Systems

	Slower Flowing Wastes	Faster Flowing Wastes
Description	For wastes that tend to be slower flowing due to bedding, feed, or dryness (typically stanchion barns or thick slurries with higher viscosities).	For wastes that tend to be faster flowing due to additional liquids or lack of bedding (typically free stall barns, veal or hog facilities, and contaminated runoff with lower viscosities).
Minimum Pipe Diameter	24 inches	No minimum diameter
Minimum Head in Gravity Flow Systems (as measured from the Maximum Operating Level (MOL) of the Waste Storage Facility)	Shall be a minimum of 4 feet below the bottom of the barn cleaner, scrape alley, etc., For pipe over 100 feet in length an additional height equal to 1% of the transfer pipe length shall be included.	Liquid or semi-solid wastes shall have a minimum of: • 2 feet below the scrape alley, barn cleaner, channel, etc., and • An additional height equal to 1% of the transfer pipe length Diluted wastes shall have a minimum of: • 1 foot below the scrape alley, barn cleaner, channel, etc., and • An additional height equal to 1% of the transfer pipe length
Minimum Volume of Reception Structure	One full day's manure production. A minimum of one-half a day's manure volume must be between the MOL of the waste storage facility and the bottom of the barn cleaner or scrape alley.	One full day's manure production.
Vent Pipe	A 6-inch diameter minimum vent pipe is required. Install within 10 feet of the reception structure.	A 6-inch diameter minimum vent pipe installed within 10 feet of the reception structure is required for reception structures with knife valves.

VI. Considerations

Considerations include additional design recommendations that are not required criteria, but may be used to enhance, or avoid problems with, the design and function of this practice.

A. Consider the operating space requirements of loading and unloading of equipment in the vicinity of the transfer components.

B. Consider the use of leak detection methods and equipment for monitoring and periodic pressure testing of waste transfer systems.

C. Consider how operating temperatures may affect the *pressure rating* of the pipe.

D. Consider installing thrust control consisting of a cast-in-place thrust block installed at every third joint, or a mechanical joint restraint device installed at every joint for gasketed pipe subjected to pulsating flow.

E. Consider the need for additional check valves, clean-outs, vent risers, knife valves, anti-siphon protection, vacuum relief valves and open air breaks, as appropriate, on all transfer pipe systems.

F. Consider the potential for salt (struvite) deposits in small pipe. Preventative measures may be needed, such as acid washing the pipe to prevent deposits.

G. Consider pressure testing pipe installed in sensitive areas, large daily flow volumes, long flow lengths, high flow pressures, etc.

H. Consider installing permanent aboveground or buried pipe for hoses and temporary pipe that is used on a regular basis to transfer waste.

I. Consider the effects of adding liquid to manure that contains sand bedding. Liquid can enhance sand settling.

J. Consider having gravity pipe follow as direct a route as possible. Risers, such as pre-manufactured manholes, may be used to change direction.

K. Consider installing a clean-out or vent riser within 10 feet of the reception structure, for gravity transfer systems that are not required to have a vent riser in order to reduce the risk of air lock in the pipe.

L. Consider installing a manually operated shut off valve for isolation purposes for gravity discharge pipe used for transferring waste from one structure to another.

M. Consider the use of a wet sump to reduce solids separation within the gravity reception structure.

N. Consider abandonment, relocation, or additional floodproofing for existing reception structures located in flood prone areas. For additional information on floodproofing structures, see "Floodproofing Non-Residential Structures," FEMA 102, May 1986, Federal Emergency Management Agency.

VII. References

USDA, NRCS, Agricultural Waste Management Field Handbook, Part 651.

Wisconsin Department of Safety and Professional Services (DSPS), Safety and Building Division, Plumbing Products Database: http://dsps.wi.gov.

Wisconsin Administrative Code, Department of Natural Resources, Chapter NR 812, Well Construction and Pump Installation.

FEMA, Floodproofing Non-Residential Structures, FEMA 102, May 1986.

USDA, NRCS, National Handbook of Conservation Practices.

USDA, NRCS Wisconsin Field Office Technical Guide (FOTG), Section IV, Practice Standards and Specifications.

American Society of Agricultural and Biological Engineers (ASABE), Standard EP470, Manure Storage Safety.

VIII. Definitions

Animal Production Area (V.A.2.b) – Means any part of the livestock operation that is used for the feeding and housing of livestock. This includes the entire animal confinement and feeding area, and any adjacent manure storage areas, raw materials storage areas, and waste containment areas. This does not include pasture and cropland.

Bedrock (V.A.2.d.2)) – The solid or consolidated rock formation typically underlying loose surficial material such as soil, alluvium or glacial drift. Bedrock includes but is not limited to limestone, dolomite, sandstone, shale and igneous and metamorphic rock.

Note: Although solid or consolidated bedrock can sometimes be removed with typical excavation

equipment, these materials are included in the above definition.

Channel (II) – A narrow structure, 4 feet or less in width, into which wastes are scraped or flushed for immediate transfer to reception structures, hoppers or waste storage facilities. They include field-fabricated or cast-in-place drop inlet structures incorporated into gravity transfer pipe. They also include existing gutters modified from how they were originally operated and constructed. Channels may include internal mechanical or hydraulic transfer mechanisms.

Clean-out Access (V.B.2.a.12)) –Pipe appurtenances such as air flushing valves, risers, manholes, and accessible openings of pipe into reception structures or storage facilities that allow mechanical cleaning or unplugging of a pipe.

Confined Space (V.A.5) – Confined Space is a space that 1) contains or has the potential to contain a hazardous atmosphere; 2) is large enough and so configured that a person can bodily enter; 3) has limited or restricted means for entry or exit; and 4) is not designed for continuous human occupancy.

Contaminated Runoff (II) – Runoff that has come through or across a barnyard or animal lot or feed storage area. It generally includes the runoff and any manure, sediment, feed, or other material carried in the runoff. It contains lower concentrations of contaminants than leachate from feed or manure.

Cultural Resources (V.A.2.a.) – Cultural resources are the traces of any past activities and accomplishments of people. They include tangible traces such as historic districts, sites, buildings, structures, historical documents and cemeteries. They also include traces of less tangible objects such as dance forms, aspects of folk-life, cultural or religious practices, and some landscapes and vistas.

Flood Prone Areas (V.A.4.a.) – These include areas delineated as floodplains on Federal Emergency Management Agency (FEMA) maps, or local floodplain maps as well as areas along perennial streams (blue lines) shown on the United States Geologic Survey quadrangle sheets that may be subject to out of bank flows.

Gleyed Soil (V.A.2.d.1)) – Soil that has been subject to prolonged saturated conditions, exhibited by gray, blueish gray, greenish gray, dark greenish gray, dark blueish gray as the dominant soil colors. (These colors appear on the Munsell color charts for Gley) Soil color and patterns must be observed immediately upon excavation because air exposure may rapidly transform colors to a mottled pattern of reddish, yellow or orange patches.

Gutters (III) – Existing open troughs within housing facilities that are used to transfer wastes to a reception structure or waste storage facility. Existing gutters modified from how they were originally operated and constructed are considered to be channels.

Hopper (II) – Structure meant solely to feed wastes into a transfer pump. Hoppers larger than 6,000-gallon capacity are defined as reception structures.

Leachate (II) – Concentrated liquid waste which has percolated through or drained by gravity from a pile of manure, manure processing derivative, or animal feed. It contains much higher concentrations of contaminants than contaminated runoff.

Manure Processing Derivatives (II) – The by-products and waste components that are produced as a result of treatment and processing practices. These include, but are not limited to, the following waste components: flush water, separated sand, separated manure solids, precipitated manure sludges, supernatants, digested liquids, composted biosolids, and process waters.

Perched Conditions (V.A.3.c.) – Perched conditions describe a soil moisture regime where saturated soil is located above unsaturated soil.

Pump shut-off head (V.B.2.a.7)) - Maximum pressure a pump can produce. Represented by the highest point on the pump flow curve.

Pressure Rating (VI.D) – Estimated maximum water pressure the pipe is capable of withstanding continuously with a high degree of certainty that failure of the pipe will not occur. Pressure rating is determined by the pipe manufacturer.

Reception Structure (II) – A collection vessel that will hold waste and facilitate its transfer.

Transfer System Pressure Rating (V.A.7) - The lowest pressure rating of any pipe, pipe fittings, and other appurtenances. This is independent of pump shut-off head pressure.

Wastewater (II) – Milkhouse and milking parlor washwater, leachate from feed storage areas, and similar waste materials. Wastewater from holding area is considered manure.

Working Pressure (V.A.7) – The maximum designed operating pressure of the transfer system. Working pressure is a maximum of 72% of the transfer system pressure rating. For pumped systems, this is determined by the shut-off head of the pump and static head.

OPERATION AND MAINTENANCE PLAN

GOLDEN SANDS DAIRY
FACILITY DEVELOPMENT PLAN

January 2014

PREPARED FOR:

Jim Wysocki
P.O. Box 330
Bancroft, WI 54921

PREPARED BY:

Resource Engineering Associates, Inc.
3510 Parmenter St., Suite 100
Middleton, Wisconsin, 53562

Table of Contents

1. Project Contacts 3
2. Purpose 4
3. Waste Storage Facilities 5
4. Feed Storage Area Pad 7
5. Feed Storage Area Collection Basin 8
6. Separated Solids and Sand Stacking Pad 9
7. Waste Utilization 10
8. Contingency Plan 10
9. Emergency Response Plan 10

1. Project Contacts

Owner Contact

Jim Wysocki - Operator
P.O. Box 330
Bancroft, WI 54921
Phone: (715) 335-8060
Fax: (715) 335-8061
Email: jim.wysocki@rpespud.com

DNR Regional Contact

Robert Rohland
910 Highway 54 E
Black River Falls WI, 54615
Phone: (715) 284-1429
robert.rohland@wisconsin.gov

DNR CAFO Permit #:

County Animal Waste Contact

Shane Wucherpfennig
Engineering Technician– Wood County LCD
400 Market St
Wisconsin Rapids, WI 54495
Phone: (715) 421-8475

Resource Engineering Associates, Inc. Contacts

Robert Pofahl, PE
3510 Parmenter Street, Suite 100
Middleton, WI 53562
Phone: 608-831-5522 x13
Fax: 608-831-6564
Email: bob@reaeng.com

Site Location

Wood County, Wisconsin
Town of Saratoga (T 21N, R 6E)
SW1/4 of SE1/4, SE1/4 of SW1/4, and eastern half of SW1/4 of SW1/4 of Section 20

2. Purpose

The purpose of providing this report is to provide information on the operation and maintenance of the following structures:

Concrete waste storage facilities (WSF1/WSF2/WSF3)
Concrete feed storage pad
Concrete feed storage pad runoff collection basin
Concrete separated solids and sand stacking pad
Concrete separated solids and sand stacking pad collection basin
Concrete tanks for soaker water collection (6)

Proper operation and maintenance is required for a structure to function as intended and to extend the useful life of that structure. Standard Wisconsin NRCS O & M documents have been reviewed and incorporated into this plan. The owner is responsible for implementing the O & M plan. The O & M plans may be required to be modified to accommodate unforeseen circumstances or conditions.

3. Waste Storage Facilities

Description

Waste Storage Facility #1 & #2

Waste Storage Facility #1 and #2 (WSF1) and (WSF2) are to have sloped-side walls and a concrete liner with waterstop and an 8" secondary clay liner.

The maximum operating level (MOL) is elevation = 1007 feet giving a one foot freeboard and storage for a 25 yr, 24 hr rainfall event and runoff from the collected areas. WSF1 and WSF2 each have a capacity of 6,633,351 gallons at MOL.

Waste will be pumped to WSF1 from the separation building, the feed storage collection basin, and the separated solids stacking pad. Waste in WSF1 will flow to WSF2 through two 12" PVC pipes connecting the basins. A concrete overflow will be between WSF1 and WSF2 in the case that the pipes were to plug.

WSF2 will be pumped to WSF3 by a manhole pump station.

WSF1 and WSF2 will be emptied by backing a pump down the agitation ramp.

The design equipment loads on the concrete floor are based on nominal use of Caterpillar 938H Wheel Loader.

Waste Storage Facility #3

Waste Storage Facility #3 (WSF3) is to have sloped-side walls and a concrete liner with waterstop and an 8" secondary clay liner.

The maximum operating level (MOL) is elevation = 1017.6 feet giving a one foot freeboard and storage for a 25 yr, 24 hr rainfall event. WSF3 has a capacity of 26,936,920 gallons at MOL.

Waste will be pumped to WSF3 from WSF2 by a manhole pump station.

WSF3 will be emptied by backing a pump down the agitation ramp.

The design equipment loads on the concrete floor are based on nominal use of Caterpillar 938H Wheel Loader.

Safety

Warning signs, fences, ladders, ropes, rails, and other devices shall be provided, as appropriate.

A fence is required around the waste storage facility. Fences shall discourage passage of livestock and people.

Install and maintain safety stops, gates, or both at push-off ramps and load-out areas of impoundments and structures to prevent accidental entry of machinery, people, and cattle.

Emptying

Immediately remove foreign debris within the structure that may cause damage to pumps or agitators. Agitate properly according to pump manufacturer's instructions. Minimize odors by not mixing and spreading on humid days or upwind from nearby neighbors. Periodically remove solid accumulation on bottom of storage.

Waste Utilization

Manure application to comply with state laws, local ordinances, and the nutrient management plan.

Inspections

1. A thorough inspection of concrete liners for separations and/or cracks which would indicate potential failure should be made each time the storage is emptied. Repairs should be made immediately.

2. Pipes, pumps, valves, gates, etc., should be inspected periodically (minimum of twice a year) to confirm they appear functional, structurally sound, and not cracked, broken, and/or a safety hazard to the operator or livestock. Repair as needed.

3. Cut and remove weeds, shrubs, and trees from earthen structures. Control rodents. Mow the embankments a minimum of twice a year. Good vegetative cover should be maintained on earth embankments. If the vegetative cover is damaged, embankments should be re-vegetated as soon as possible. Keep machinery away from steep side slopes. Keep equipment operators informed of potential hazards.

4. Maintain necessary safety features including fencing, warning signs, stop blocks, guard rails, covers, and similar items to provide warning and/or prevent unauthorized human or livestock entry.

Operator to list other O & M tasks which may be of concern based on experience.

4. Feed Storage Area Pad

Description

The feed storage pad is planned to be a concrete liner with waterstop design. The feed storage area slopes to the west to a runoff collection basin. Areas surrounding the concrete pad are designed to slope away from the pad. The design equipment loads on the concrete floor are based on nominal use of Caterpillar 938H Wheel Loader.

Operation

Limit how much feed is exposed to precipitation while removing plastic and/or feed from storage. Cover waste feed with plastic or place under a roof to reduce leachate and contaminated runoff. Pad should be periodically cleaned to limit contaminated runoff. Feed mixed with snow should be field spread in accordance with the nutrient plan.

Feed should not be stored in drainage paths.

Store plastic and weighting materials in a manner that avoids infestation by rodents and insects. Use cut tires or drill holes in tires to reduce water accumulation. Mow weeds to discourage vermin colonization.

As generated, place waste plastic in a storage area where the plastic will remain free of dirt and precipitation and be protected from transportation by the wind. Recycle or landfill the waste plastic on a regular basis.

Inspections

1. A thorough inspection of the concrete liner for separations and/or cracks which would indicate potential failure should be made each time the pad is emptied. Repairs should be made immediately.

2. Confirm areas surrounding the pad are draining away from the pad.

3. Cut and remove weeds, shrubs, and trees from earthen structures. Control rodents. Good vegetative cover should be maintained on earth embankments. If the vegetative cover is damaged, embankments should be re-vegetated as soon as possible. Keep machinery away from steep side slopes. Keep equipment operators informed of potential hazards.

Operator to list other O & M tasks which may be of concern based on experience.

5. Feed Storage Area Collection Basin

Description

The feed storage area pad has a concrete collection basin that will collect runoff from the stacking pad. Runoff will enter the basin through a grated opening in the basin to limit solids in the basin.

Operation

The basin is planned to have a 6:1 concrete ramp for access (occasional access is anticipated to remove solids). The basin will handle runoff from the 25yr 24hr storm event, with 1' of freeboard. The 100yr 24hr storm will fill the basin and back up into the feed storage pad. The design equipment loads on the concrete floor are based on nominal use of Caterpillar 938H Wheel Loader.

Two pumps will be installed to pump the collected leachate and runoff. The pumps will have floats and programmable logic controller (PLC) to pump the collected liquids.

Inspection

1. Maintain pumps, agitators, pipes, valves, electrical and mechanical equipment in good operating condition following the manufacturer's recommendations.
2. Confirm that electrical equipment is properly grounded and wiring is in good working condition.
3. Maintain safety shields on pumps, motors, electrical or mechanical equipment.
4. Fencing, railings, grates and/or warning signs shall be maintained to prevent unauthorized human or livestock entry.
5. Immediately repair vandalism, vehicular or livestock damage to the system.
6. Repair spalls, cracks and weathered areas in concrete surfaces.
7. Repair or replace rusted or damaged metal. Protect with paint.
8. Operate system in a manner that minimizes odor and air drift.
9. Clean the inlet screen frequently to maintain flow to the basin.

Operator to list other O & M tasks which may be of concern based on experience.

6. Separated Solids and Sand Stacking Pad

Description

The stacking pad is planned to be concrete with waterstop. The storage area slopes to the east to a runoff collection basin. Grading around the storage is designed for working access and to divert runoff away from the storage.

Operation

Pad should be periodically cleaned to limit contaminated runoff. Clean the manhole and transfer pipe to maintain capacity to the reception tank.

The design equipment loads on the concrete floor are based on nominal use of Caterpillar 938H Wheel Loader.

Separated sand and solids should not be stored in drainage paths.

Inspections

1. Inspect concrete liners for separations and/or cracks which would indicate potential failure each time the pad is emptied. Repairs should be made immediately.

2. Confirm areas surrounding the pad are draining away from the pad.

3. Cut and remove weeds, shrubs, and trees from earthen structures. Control rodents. Good vegetative cover should be maintained on earth embankments. If the vegetative cover is damaged, embankments should be re-vegetated as soon as possible. Keep machinery away from steep side slopes. Keep equipment operators informed of potential hazards.

Operator to list other O & M tasks which may be of concern based on experience.

7. Waste Utilization

Wastes removed from structures must be utilized in accordance with the farms approved Nutrient Management Plan.

8. Contingency Plan

CONTINGENCY PLAN IF WASTE REACHES Maximum Operating Level

- Daily haul manure to fields and spread according to your Nutrient Management (590) plan, or
- Partially empty the facility and spread according to your Nutrient Management (590) plan
- Parlor water waste may be daily hauled, pumped from the holding tank to a tanker/spreader and field applied in accordance with the Nutrient Management (590) plan
- If this contingency plan is needed often, consider adding storage volume or reducing water use in the milking center.

9. Emergency Response Plan

An Environmental Incidence Response Plan is presented in a separate report that is enclosed with this O & M report.

FACILITY DEVELOPMENT PLAN

PREPARED FOR:

GOLDEN SANDS DAIRY
8550 CENTRAL SANDS ROAD
BANCROFT, WI 54921

PREPARED BY:

RESOURCE ENGINEERING ASSOCIATES, INC
3510 PARMENTER ST., SUITE 100
MIDDLETON, WISCONSIN 53562

MAY 2012

REVISED JANUARY, 2014

WISCONSIN PROFESSIONAL ENGINEER ROBERT J. POFAHL E-15298 MIDDLETON WI

1/31/14

ROBERT J. POFAHL, P.E.

To the best of my professional knowledge, judgement and belief, these plans meet the the following applicable NRCS standards:

NRCS Standard 313-Waste Storage Facility
NRCS Standard 634-Waste Transfer
NRCS Standard 629-Waste Treatment

JIM WYSOCKI, OWNER

DIGGERS HOTLINE

Diggers Hotline: Wisconsin's One-Call Center

CALL 811 or (800) 242-8511 | (414) 259-1181 | (877) 500-9592 (emergency only)

PLAN SET INDEX

COVER PAGE	C1
GENERAL NOTES	C2
GENERAL NOTES	C3
EXISTING SITE LAYOUT	C100
PROPOSED SITE LAYOUT	C101
BARNS EAST GRADING & PIPELINES	C102
BARNS WEST GRADING & PIPELINES	C103
FEED PAD GRADING & PIPELINES	C104
SOLIDS PAD GRADING & PIPELINES	C105
WASTE STORAGE FACILITY GRADING	C106
EROSION CONTROL PLAN	C107
MANURE BASIN CROSS SECTIONS	C300
MANURE BASIN CROSS SECTIONS	C301
PIPE PROFILES	C302
PIPE PROFILES	C303
PIPE PROFILES	C304
PIPE PROFILES	C305
PIPE PROFILES	C306
MANHOLE CROSS SECTION	C307
BASIN DETAILS	C400
FENCE & GATE DETAILS	C401
FENCE DETAIL	C401.1
PIPE DETAILS	C402
THRUST BLOCK DETAILS	C403
PIPE BEDDING DETAILS	C404
CLEANOUT DETAIL	C405
PUMP DETAILS	C406
PUMP DETAILS	C407
PUMP DETAILS	C408
PUMP DETAILS	C409
WSF #1 & #2 LAYOUT	S100
WSF #3 LAYOUT	S101
FEED STORAGE PAD LAYOUT	S102
SOLIDS STACKING PAD LAYOUT	S103
SMALL BASIN LAYOUTS	S104
TANK LAYOUTS	S105
CLEAN SAND STACKING PAD	S106
8' WALL	S400
2' & 4' WALLS	S401
STRUCTURAL DETAILS	S402
STRUCTURAL DETAILS	S403
STRUCTURAL DETAILS	S404
STRUCTURAL DETAILS	S405
15' WALL	S406

SEPARATION BUILDING PLANS BY (mp)²

RESOURCE ENGINEERING ASSOCIATES, INC.

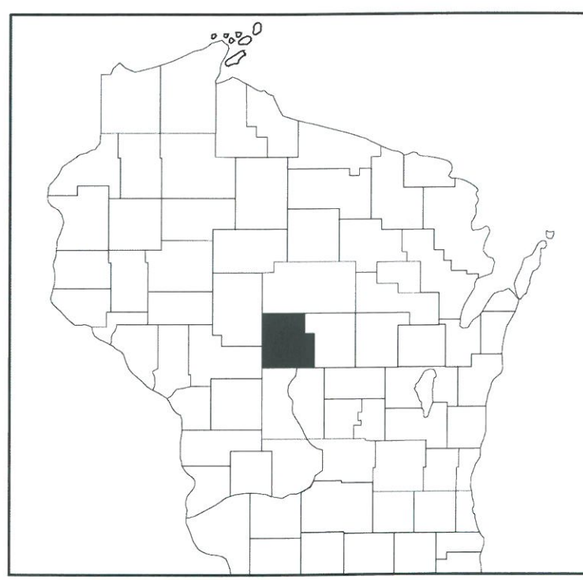

STATE OF WISCONSIN
WOOD COUNTY

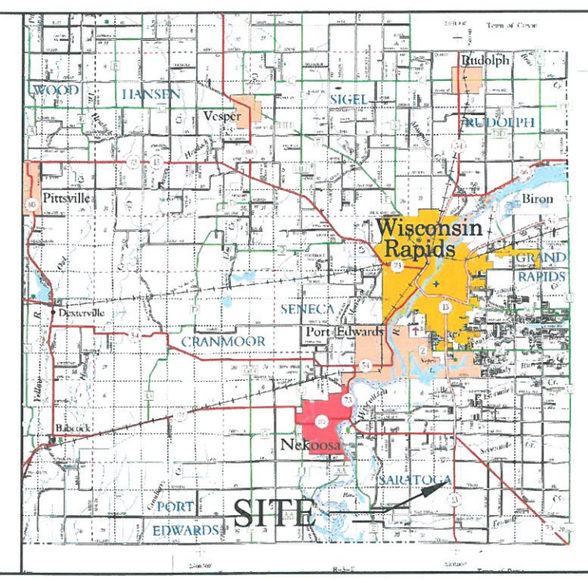

WOOD COUNTY
SARATOGA TOWNSHIP

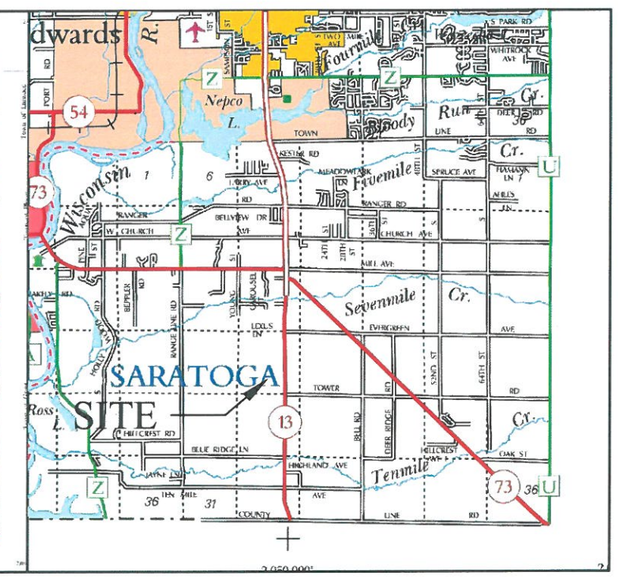

SARATOGO TOWNSHIP
SECTION 20, T21N, R6E

GENERAL NOTES AND SPECIFICATIONS

1. Construction shall be executed in accordance with the following:

a. Design Plans & Specifications:

b. Wisconsin Field Office Technical Guidance. USDA–NRCS Wisconsin Conservation Practice Standards including:

- 313–Waste Storage Facility (6/13),
- 342–Critical Area Planting (1/13),
- 629–Waste Treatment (3/13),
- 634–Waste Transfer (9/12),

c. USDA–NRCS Section IV, Technical Guide. Wisconsin Construction Specification including:

- 1–Clearing (5/12),
- 2–Excavation (5/12),
- 3–Earthfill (5/12),
- 4–Concrete (5/13),
- 5–Construction Site Pollution Control (5/12),
- 7–Mobilization and Demobilization (5/12),
- 8–Drainfill (5/12),
- 9–Rock Riprap (11/11),
- 10–Fences (11/09),
- 11–Small Rock Aggregate (3/13),
- 15–Plastic Pipe Conduits (4/09),
- 24–Construction Surveys (5/12),
- 26–Topsoiling (5/12),
- 204–Earthfill for Waste Storage Facilities (10/12),
- 300–Clay Liner (11/12),
- 634–Waste Transfer Pipe (9/12),

Copies of the Wisconsin Conservation Practice Standards and the Wisconsin Construction Specifications can be obtain from the WI NRCS website.

d. The term Technician as identified in the USDA–NRCS Specifications and Codes shall refer to a representative from Resource Engineering Associates, Inc. (REA) or other representive selected by owner.

2. Contractor shall verify profiles, heights and dimensions of project prior to fabrication of materials or layout and inform the owner of discrepancies or interferences.

Building grades shall be confirmed with the building contractor.

3. Earth, concrete, steel and other quantities provided are intended for preliminary information. The contractor shall independently determine quantities and lengths.

4. No structural alteration or work affecting a structural member shall be made unless approved in writing by the engineer and owner.

5. Shop drawings are required for special material applications. Required shop drawings will be reviewed by the owner or owners representative for conformance with the design concept. The shop drawings shall be returned within 7 working days. The drawings will be marked as follows:

- No exceptions taken, furnish as submitted;
- Furnish as modified;
- Revise and resubmit.

Project Benchmark for vertical & horizontal control is Benchmark #1 (BM#1). Contractor to confirm elevations from BM#1.

BM#1 = Survey disk in top of concrete monument DH5557 elev. 1010.09' located 0.25 mi east of Hwy 13 & Tower Rd intersection.

A. CLEARING

Clearing shall be in accordance with NRCS WI Construction Specification 1, Clearing. Topsoil from the excavated and fill areas shall be stockpiled for use as final grade material on areas to be seeded.

B. EXCAVATION

Excavation shall be in accordance with NRCS WI Construction Specification 2, Excavation.

C. EARTHFILL

Earthfill shall be in accordance with NRCS WI Construction Specification 3, Earthfill. Lenses or pockets of soil not meeting minimum construction requirements as specified in NRCS Code 313 shall be removed and replaced with the specified materials.

D. EARTHFILL FOR WASTE STORAGE FACILITIES

Earthfill shall be in accordance with NRCS Construction Specification 204, Earthfill For Waste Storage Facilities. Lenses or pockets of soil not meeting minimum construction requirements as specified in NRCS 313 shall be removed and replaced with the specified materials.

E. CONCRETE

1. Design Loads

a. Design loads are as specified on the individual structural drawings. Minimum loads are as specified in NRCS Code 313.

b. Minimum design soil bearing pressure is 3,000 PSF unless specified on drawings. Soil with apparent bearing pressure less than this shall be removed and replaced.

2. Mixes

a. Use NRCS Construction Specification 4, Concrete.

b. Unless otherwise specified, concrete mix shall have minimum requirements including: 4 to 8% Air entrainment, minimum compressive strength at 28 days > 4000 psi, slump = 5 to 8 inches and requirements as stated in NRCS–WI Construction Specification 4, Concrete.

The design mix shall be selected in accordance with ACI 318 Chapter 5. Test data shall be provided for selection of the mix design. Batch tickets shall be issued confirming the concrete meets the selected mix requirements.

Concrete cylinder tests shall be collected and tested by the concrete Contractor for at least every 150 cubic yards of concrete placed. Each test shall be laboratory cured. If temperatures within seven days after placement are anticipated to exceed 80 degrees F or drop below 40 degrees F, additional concrete cylinders shall be collected and cured under field conditions for comparison to laboratory cured samples. Test results shall be submitted to the Engineer.

3. Steel reinforcement shall meet ASTM A–615, Grade 60 billet steel.

Minimum Splice Lengths
#3 bar – 16"
#4 bar – 19"
#5 bar – 24"
#6 bar – 28"

4. Slab reinforcing bars shall be placed within 1.5" of the top of slab unless noted otherwise. Placing reinforcement on chairs or bolsters at 3' to 4' on center is required. Lifting reinforcement after concrete is placed is not considered to be an effective means of placement and shall not be allowed.

5. Waterstops shall be 6 inch imbedded non–metallic, and joints shall be welded in accordance with manufacturing recommendations, in accordance with NRCS WI Construction Specification 4, Concrete.

6. Expanding sealant shall be:

- Greenstreak Hydrotite or equivalent, minimum 3/4" wide by 3/8" high
- Adeka Ultra Seal MC–2005T or equivalent, minimum 3/4" wide by 1/4" high
- Sika Swell or equivalent, minimum 3/4" wide by 1/8" high
- C. I. Kasei Leakmaster or equivalent, minimum cross section to be 3/4" wide by 1/4" high
- Conchem Swell Seal or equivalent, minimum 3/4" wide by 1/8" high

All materials are to be applied in conformance with the manufacturer's requirements.

F. PLASTIC PIPE – WASTE TRANSFER

1. Installation

a. The installation shall be in accordance with NRCS WI Construction Specification 634, Waste Transfer Pipes and the manufacturer's recommendations.

b. Pipe penetration through precast water tight concrete structures shall be sealed with a flexible water tight boot similar to PSX–Positive Seal Gasket for pipe dia. specified. Pipe penetrations through cored holes in existing structures or cast–in–place holes shall be modular mechanical seals such as LinkSeal with EDPM seals and stainless steel hardware. Install in accordance with manufacturer's recommendations.

2. Pipe

a. PE gravity pipe for manure transfer shall be smooth interior corrugated PE pipe meeting ASTM F–667 and D–3350 as applicable. An example product is ADS, N–12 pipe. Couplings and fittings shall be water tight bell coupler (min. 23 ft pressure rating) as approved by the pipe manufacturer.

b. PVC pressure plastic pipe for manure transfer shall be PVC pipe and fittings conforming to ASTM D–2241 (SDR 21) with glued or gasket joints with restraint.

c. PVC gravity plastic pipe for manure transfer shall be SDR 35 PVC pipe and fittings conforming to ASTM D–3034 or F–679 with gasket or solvent weld joints in accordance with manufacturer's recommendation and ASTM D–3212. Install fittings and joints in accordance with manufacturer's recommendations.

G. WASTE TRANSFER PIPE TEST REQUIREMENTS

All waste transfer pipe shall be pressure test in accordance with NRCS WI Construction Specification 634, Waste Transfer Pipes.

1. Before Pressure Testing

a. Solvent welded and heat fused joints should be allowed to cure. Solvent welded joints should be allowed to cure for a minimum of 24 hours, or more if recommended by the glue manufacturer.

b. Pipe should be flushed and cleaned.

c. All thrust control structures shall be in place, and all cast–in–place thrust blocks shall be allowed to cure according to one of the following options:

- 3 days for early strength concrete (5,000 psi);
- 7 days for normal strength concrete (3,500 psi);
- when 500 psi strength is reached, with data that's field– or lab–verified to support.

d. Pipes shall be backfilled or otherwise restrained sufficiently along its length to anchor the pipe against movement during the pressure testing. The pipe shall also be braced and/or anchored at each end to prevent movement.

e. The ends of the pipe shall be plugged, and a pressure gauge shall be attached to the upstream and downstream ends. All high points along the severe service transfer pipe shall be vented to permit the complete removal of all air within the pipe.

2. Filling

Slowly fill the restrained test section completely with clear water. WARNING – Ensure that there is no air trapped in the test section. Failure to remove entrapped air can cause explosive release resulting in death or serious bodily injury. Use equipment vents at high points to remove air.

3. Initial Expansion Phase

Gradually pressurize the test section with water to the working pressure (as specified in the construction plans) plus 10 psi and maintain that pressure for three hours. During the initial expansion phase, pipe may expand slightly, requiring additional water to maintain pressure.

REVISIONS:
DATE
DATE
DATE
DATE

RESOURCE ENGINEERING ASSOCIATES, INC.
Resource Engineering Associates, Inc.
3510 Parmenter St., Suite 100
Middleton, Wisconsin 53562-2507
Phone: 608-831-5522
Fax: 608-831-6564
Web: www.reaeng.com

GENERAL NOTES
FACILITY DEVELOPMENT PLAN
GOLDEN SANDS DAIRY
8550 CENTRAL SANDS ROAD
BANCROFT, WI 54921

DATE: AUG 2013
DRAWN: EML
CHECKED: DW
APPROVED: RJP
DRAWING NAME: 1232cover6.1.dwg
PROJECT NUMBER: 120032.1

N:\REA12\Wysocki120032_1\Civil\1232cover6.1.dwg

For gravity piping pressurize pipe to 10 psi.

4. Test Phase

Immediately following the initial expansion phase, reduce test pressure back to working pressure, stop adding water and isolate test section. If test pressure remains steady (within 5% of the target value) for one hour, no leakage is indicated and the test section passes.

5. Depressurizing

Following the test phase, and prior to putting the pipe into service, gradually reduce pressure on the test section, drain out and properly dispose of all test water. Test results shall be recorded and submitted to the Engineer.

H. STORMWATER DRAINAGE

1. Installation

a. The installation shall be in conformance with WI NRCS Construction Specification 15, Plastic Pipe Conduits and the manufacturers recommendations.

b. Plastic pipe for culverts shall be smooth interior corrugated PE pipe meeting ASTM F–667 and D–3350 as applicable. An example product is ADS N–12 pipe. Couplings and fittings shall be water tight as approved by the pipe manufacturer.

I. PUMPS FOR WASTE TRANSFER PIPES

Pump shall not exceed pipe pressure recommendations. Verify with pump and pipe suppliers.

J. FENCING

Materials and installation of fencing shall be in accordance with NRCS WI Construction Specification 10, Fences.

K. SEEDING

Basin embankments, the drainage swales, and general grading to match existing grades shall be seeded with permanent grass cover to stabilize the soil from erosion. Seedbed preparation and seeding shall be in accordance with the NRCS Code 342, Critical Area Planting. Seeded areas shall be mulched. Use seeding mix 342–7. Seeding mixture and pounds per acre are as summarized below:

Smooth Bromegrass	7 lbs/ac PLS
Creeping Red Fescue	2 lbs/ac PLS
Kentucky Bluegrass	3 lbs/ac PLS
Birdsfoot Trefoil	2 lbs/ac PLS

Seedbed Preparation: Seedbed preparation shall immediately follow construction activities. Prepare a fine, firm seedbed to a minimum depth of 4 inches.

Seeding: Inoculate legumes properly, according to manufacturer's recommendations. Seed grasses and legumes at 1/4 to 1/2 inch deep immediately after seedbed preparation. Seed may be broadcast or drilled as appropriate to the site. A cultipacker seeder works well.

Mulch: Spread mulch uniformly immediately after seeding at a rate of 1½–2 T/A. This application results in a layer of 6–7 stems, 1 to 2 inches thick. Anchor mulch to the soil with a dull weighted disc set straight or other approved methods. Work waterways crosswise when possible.

Design Criteria – Golden Sands Dairy

1. Maximum Operating Level Volume (40.2 million gallons total) not including 1 foot of freeboard. Quantities are based on manure from 3,400 cows, 50,214 gpd waste water, and runoff from 570,848 sq. ft. Storage duration is approximately 270 days.

2. Cows are anticipated to be bedded with sand. Access to the manure basins via ramps will be provided for maintenance and solid manure disposal.

3. Concrete Manure Basin – Maintain NRCS Code 313 (table 5) requirements for "Concrete with Waterstop". This includes 2 feet of separation from saturation, and 2 feet of clearance from bedrock.

4. Available information indicates the manure basin is not in a documented floodplain, and is not within 300 feet of a documented navigable stream or waterway.

5. Topographic contours from Wood County GIS.

6. Soil borings were advanced on May 9 & 10, 2012, July 16, 2012, and May 20–22, 2013 and logged by REA, Inc.

PROJECT CONTACTS

Site Contact:
Jim Wysocki
Golden Sands Dairy
8550 Central Sands Road
Bancroft, WI 54921

ENGINEER/CONSULTANT:
REA, INC.
3510 Parmenter St – Suite 100
Middleton, WI 53562
Phone: 608–831–5522
Fax: 608–831–6564
Contact: Bob Pofahl, P.E.

REVISIONS:
DATE
DATE
DATE
DATE

RESOURCE ENGINEERING ASSOCIATES, INC.
Resource Engineering Associates, Inc.
3510 Parmenter St., Suite 100
Middleton, Wisconsin 53562-2507
Phone: 608-831-5522
Fax: 608-831-6564
Web: www.reaeng.com

GENERAL NOTES
FACILITY DEVELOPMENT PLAN
GOLDEN SANDS DAIRY
8550 CENTRAL SANDS ROAD
BANCROFT, WI 54921

DATE: AUG 2013
DRAWN: EML
CHECKED: DW
APPROVED: RJP
DRAWING NAME: 1232cover6.1.dwg
PROJECT NUMBER: 120032.1

N:\REA12\Wysocki120032_1\Civil\1232cover6.1.dwg

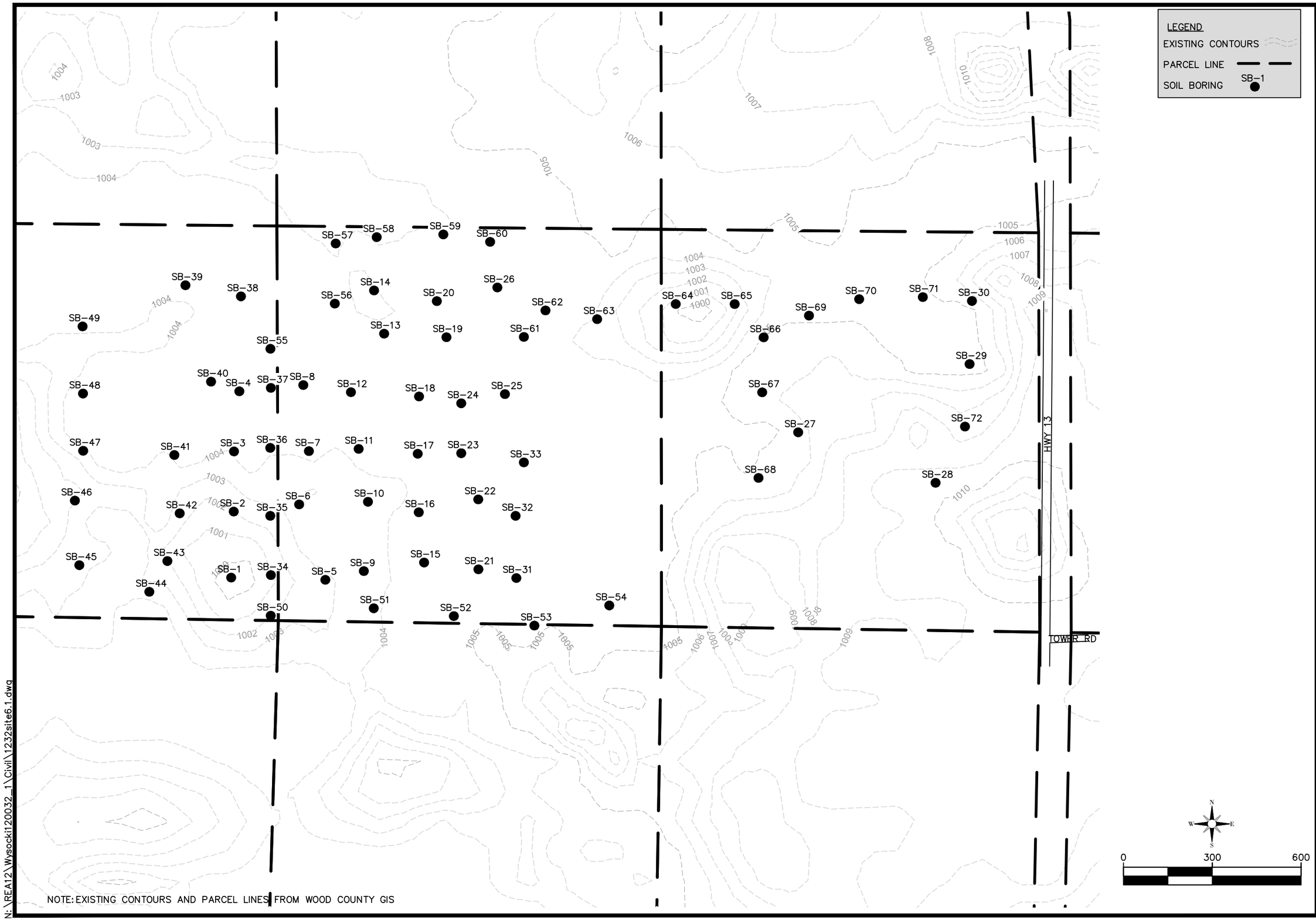

NOTE: EXISTING CONTOURS AND PARCEL LINES FROM WOOD COUNTY GIS

N:\REA12\Wysocki120032_1\Civil\1232site6.1.dwg

REVISIONS:
DATE
DATE
DATE
DATE

RESOURCE ENGINEERING ASSOCIATES, INC.
Resource Engineering Associates, Inc.
3510 Parmenter St., Suite 100
Middleton, Wisconsin 53562-2507
Phone: 608-831-5522
Fax: 608-831-6564
Web: www.reaeng.com

EXISTING SITE LAYOUT
FACILITY SITE PLAN
GOLDEN SANDS DAIRY
8550 CENTRAL SANDS ROAD
BANCROFT, WI 54921

DATE: AUG 2013
DRAWN: EML
CHECKED: DRW
APPROVED: RJP
DRAWING NAME: 1232site6.1.dwg
PROJECT NUMBER: 120032.1

C100

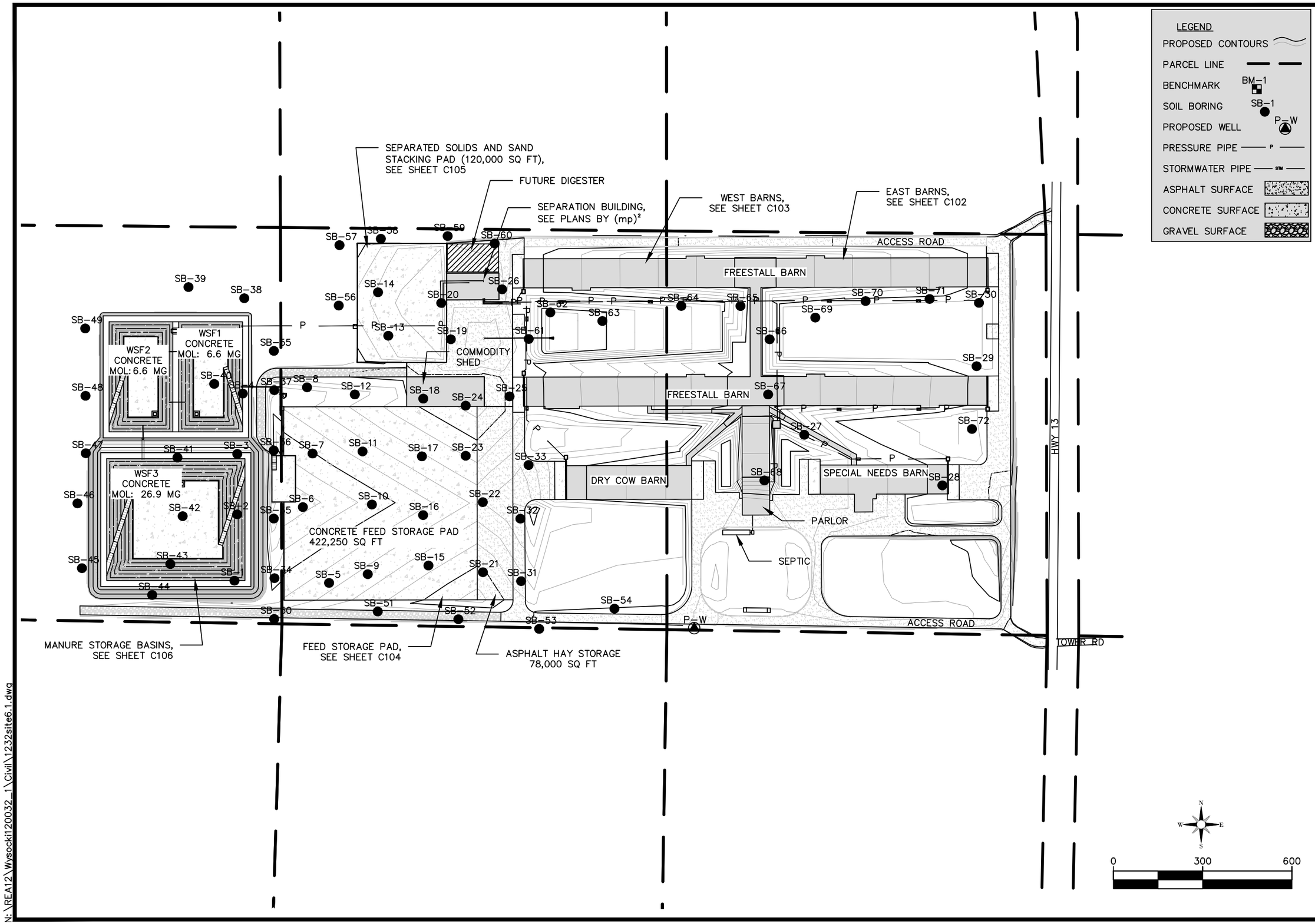

LEGEND

- PROPOSED CONTOURS
- PARCEL LINE
- BENCHMARK (BM-1)
- SOIL BORING (SB-1)
- PROPOSED WELL (P-W)
- PRESSURE PIPE (P)
- STORMWATER PIPE (STM)
- ASPHALT SURFACE
- CONCRETE SURFACE
- GRAVEL SURFACE

REVISIONS:
DATE
DATE
DATE
DATE

RESOURCE ENGINEERING ASSOCIATES, INC.
Resource Engineering Associates, Inc.
3510 Parmenter St., Suite 100
Middleton, Wisconsin 53562-2507
Phone: 608-831-5522
Fax: 608-831-6564
Web: www.reaeng.com

PROPOSED SITE LAYOUT
FACILITY SITE PLAN
GOLDEN SANDS DAIRY
8550 CENTRAL SANDS ROAD
BANCROFT, WI 54921

DATE: AUG 2013
DRAWN: EML
CHECKED: DRW
APPROVED: RJP
DRAWING NAME: 1232site6.1.dwg
PROJECT NUMBER: 120032.1

C101

N:\REA12\Wysocki120032_1\Civil\1232site6.1.dwg

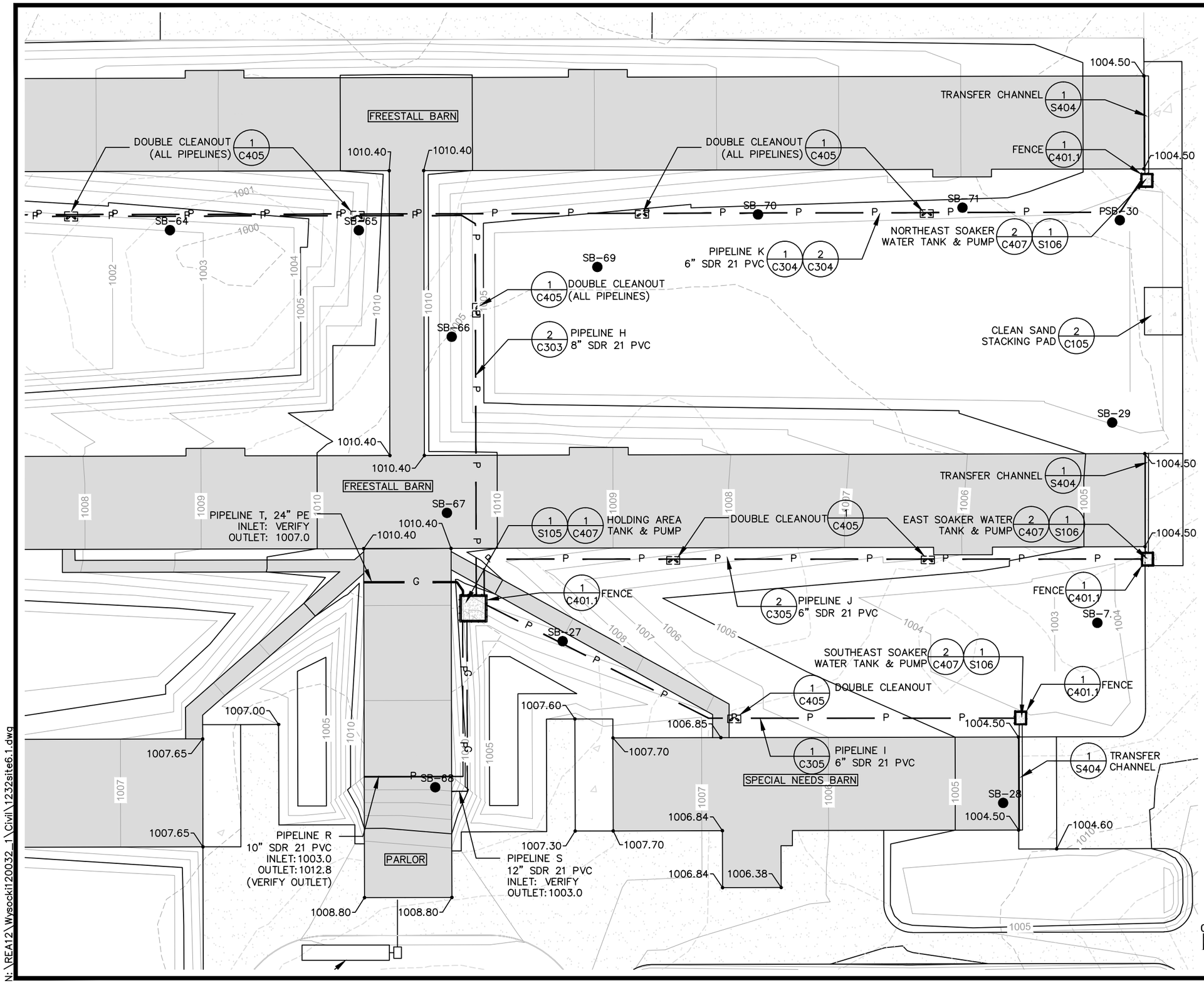

LEGEND

- PROPOSED CONTOURS
- PARCEL LINE
- BENCHMARK BM-1
- SOIL BORING SB-1
- PROPOSED WELL P-W
- PRESSURE PIPE — P —
- GRAVITY PIPE — G —
- STORMWATER PIPE — STM —

NOTE: BARN ELEVATIONS AT FINISHED FLOOR.

REVISIONS:
DATE
DATE
DATE
DATE

RESOURCE ENGINEERING ASSOCIATES, INC.
Resource Engineering Associates, Inc.
3510 Parmenter St., Suite 100
Middleton, Wisconsin 53562-2507
Phone: 608-831-5522
Fax: 608-831-6564
Web: www.reaeng.com

BARNS EAST GRADING & PIPELINES
FACILITY SITE PLAN
GOLDEN SANDS DAIRY
8550 CENTRAL SANDS ROAD
BANCROFT, WI 54921

DATE: AUG 2013
DRAWN: EML
CHECKED: DRW
APPROVED: RJP
DRAWING NAME: 1232site6.1.dwg
PROJECT NUMBER: 120032.1

C102

N:\REA12\Wysocki120032_1\Civil\1232site6.1.dwg

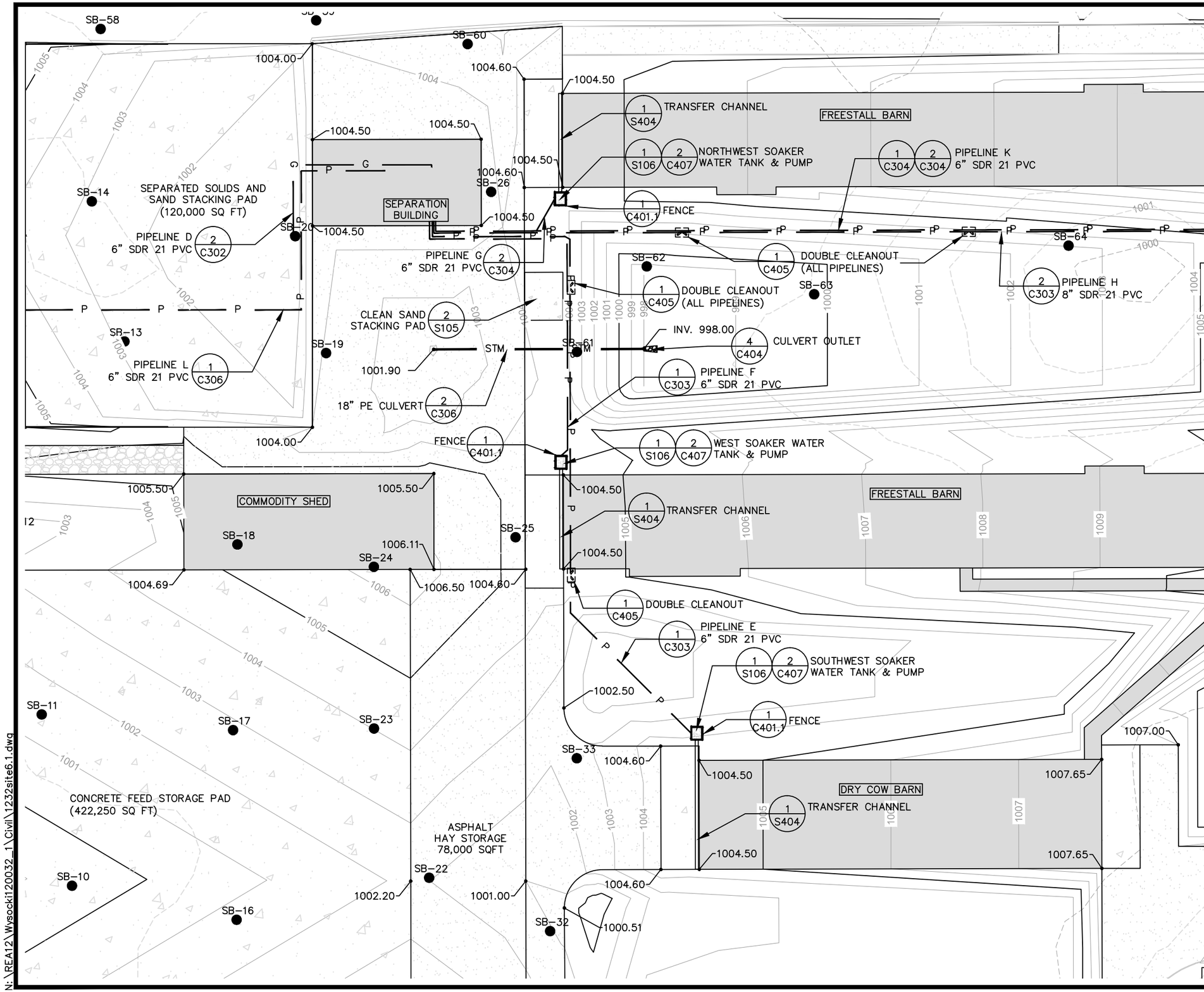

LEGEND

PROPOSED CONTOURS

PARCEL LINE

BENCHMARK BM-1

SOIL BORING SB-1

PROPOSED WELL P-W

PRESSURE PIPE — P —

STROMWATER PIPE — STM —

NOTE: BARN ELEVATIONS AT FINISHED FLOOR.

REVISIONS:
DATE
DATE
DATE
DATE

RESOURCE ENGINEERING ASSOCIATES, INC.
Resource Engineering Associates, Inc.
3510 Parmenter St., Suite 100
Middleton, Wisconsin 53562-2507
Phone: 608-831-5522
Fax: 608-831-6564
Web: www.reaeng.com

BARNS WEST GRADING & PIPELINES
FACILITY SITE PLAN
GOLDEN SANDS DAIRY
8550 CENTRAL SANDS ROAD
BANCROFT, WI 54921

DATE: AUG 2013
DRAWN: EML
CHECKED: DRW
APPROVED: RJP
DRAWING NAME: 1232site6.1.dwg
PROJECT NUMBER: 120032.1

C103

N:\REA12\Wysocki120032_1\Civil\1232site6.1.dwg

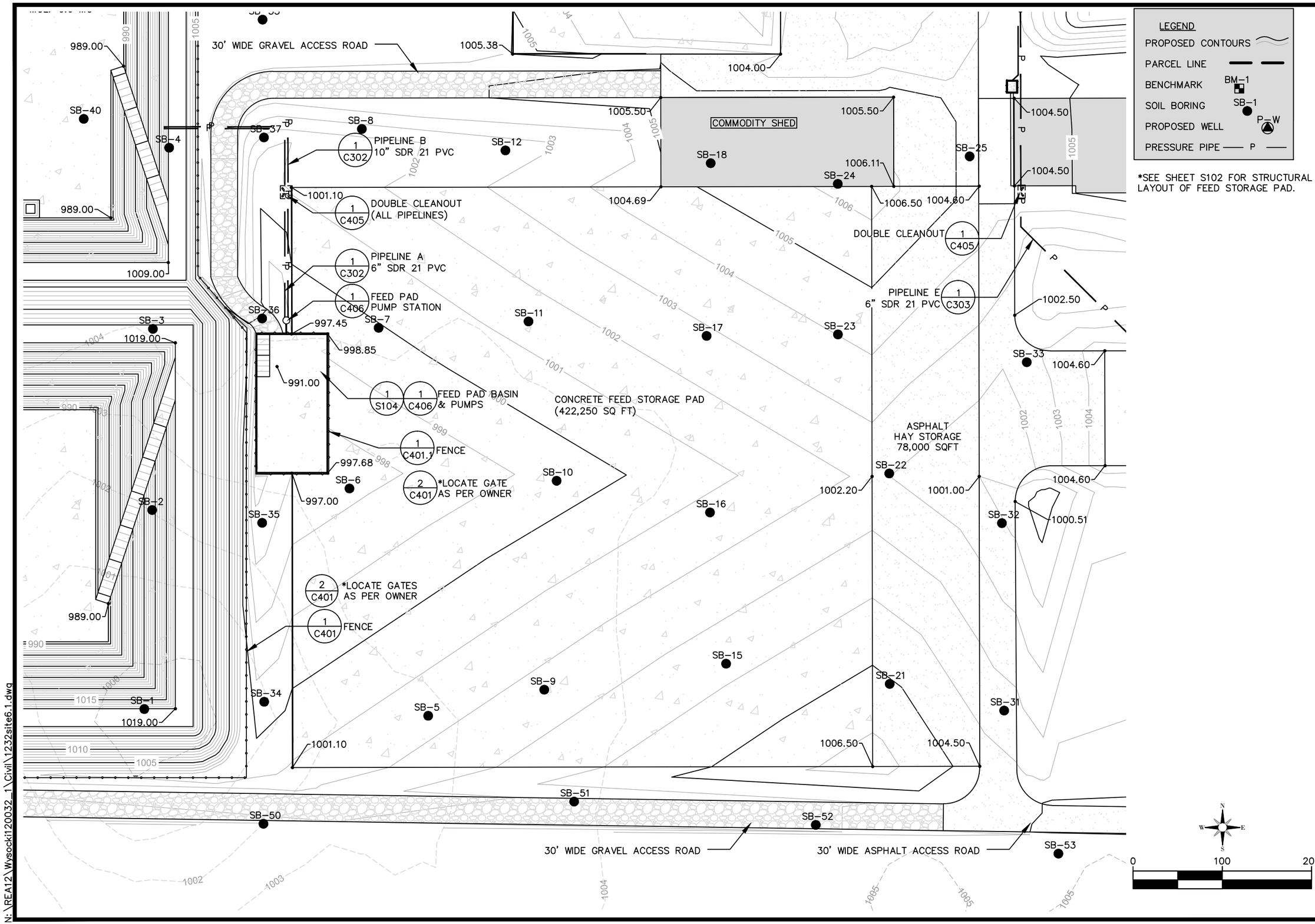

LEGEND

PROPOSED CONTOURS

PARCEL LINE

BENCHMARK BM-1

SOIL BORING SB-1

PROPOSED WELL P-W

PRESSURE PIPE — P —

*SEE SHEET S102 FOR STRUCTURAL LAYOUT OF FEED STORAGE PAD.

REVISIONS:
DATE
DATE
DATE
DATE

RESOURCE ENGINEERING ASSOCIATES, INC.
Resource Engineering Associates, Inc.
3510 Parmenter St., Suite 100
Middleton, Wisconsin 53562-2507
Phone: 608-831-5522
Fax: 608-831-6564
Web: www.reaeng.com

FEED PAD GRADING & PIPELINES
FACILITY SITE PLAN
GOLDEN SANDS DAIRY
8550 CENTRAL SANDS ROAD
BANCROFT, WI 54921

DATE: AUG 2013
DRAWN: EML
CHECKED: DRW
APPROVED: RJP
DRAWING NAME: 1232site6.1.dwg
PROJECT NUMBER: 120032.1

C104

N:\REA12\Wysocki120032_1\Civil\1232site6.1.dwg

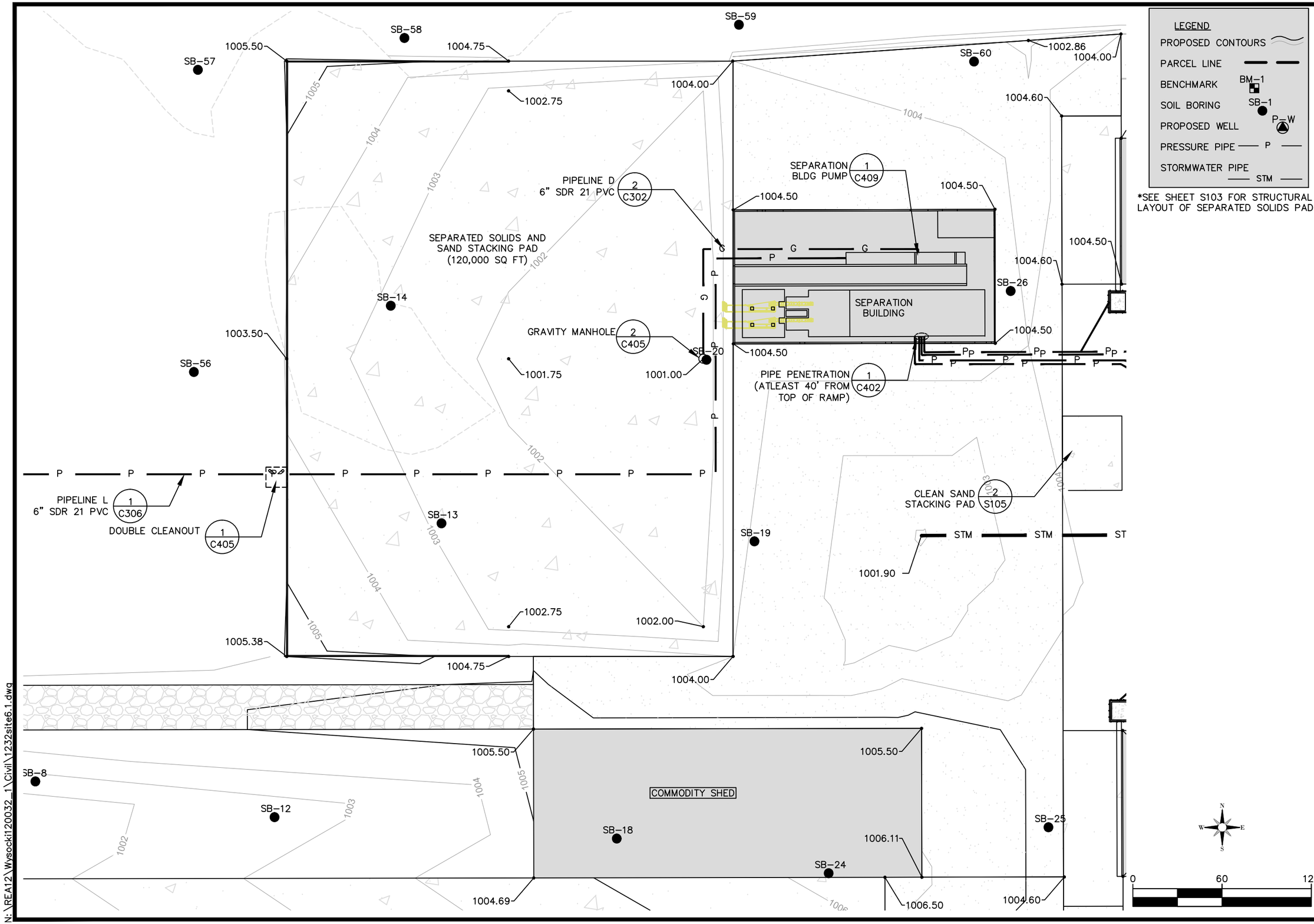

REVISIONS:
DATE
DATE
DATE
DATE

RESOURCE ENGINEERING ASSOCIATES, INC.
Resource Engineering Associates, Inc.
3510 Parmenter St., Suite 100
Middleton, Wisconsin 53562-2507
Phone: 608-831-5522
Fax: 608-831-6564
Web: www.reaeng.com

SOLIDS PAD GRADING & PIPELINES
FACILITY SITE PLAN
GOLDEN SANDS DAIRY
8550 CENTRAL SANDS ROAD
BANCROFT, WI 54921

DATE: AUG 2013
DRAWN: EML
CHECKED: DRW
APPROVED: RJP
DRAWING NAME: 1232site6.1.dwg
PROJECT NUMBER: 120032.1

C105

N:\REA12\Wysocki120032_1\Civil\1232site6.1.dwg

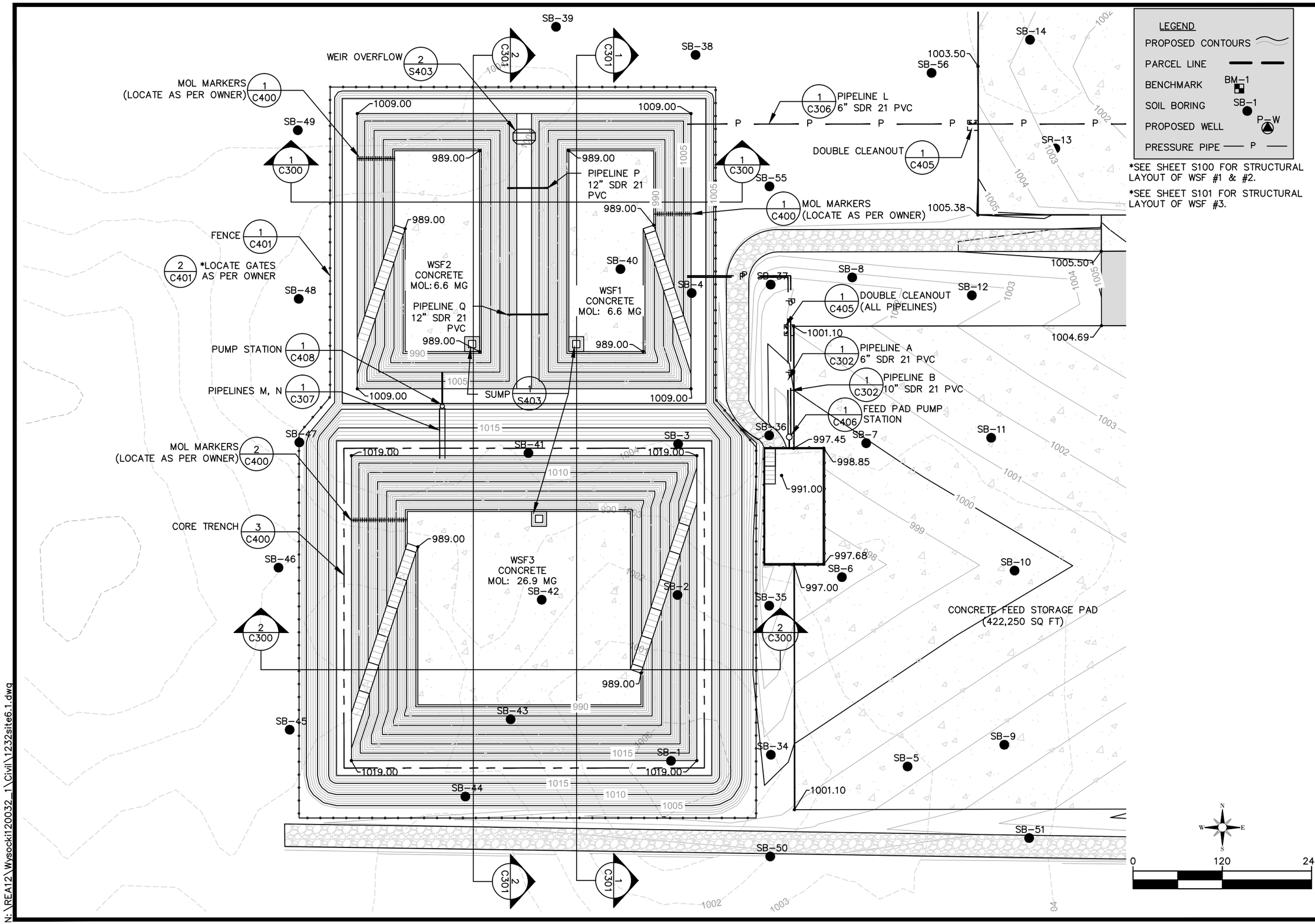

REVISIONS:
DATE
DATE
DATE
DATE

RESOURCE ENGINEERING ASSOCIATES, INC.
Resource Engineering Associates, Inc.
3510 Parmenter St., Suite 100
Middleton, Wisconsin 53562-2507
Phone: 608-831-5522
Fax: 608-831-6564
Web: www.reaeng.com

WASTE STORAGE FACILITY GRADING
FACILITY SITE PLAN
GOLDEN SANDS DAIRY
8550 CENTRAL SANDS ROAD
BANCROFT, WI 54921

DATE: AUG 2013
DRAWN: EML
CHECKED: DRW
APPROVED: RJP
DRAWING NAME: 1232site6.1.dwg
PROJECT NUMBER: 120032.1

C106

N:\REA12\Wysocki120032_1\Civil\1232site6.1.dwg

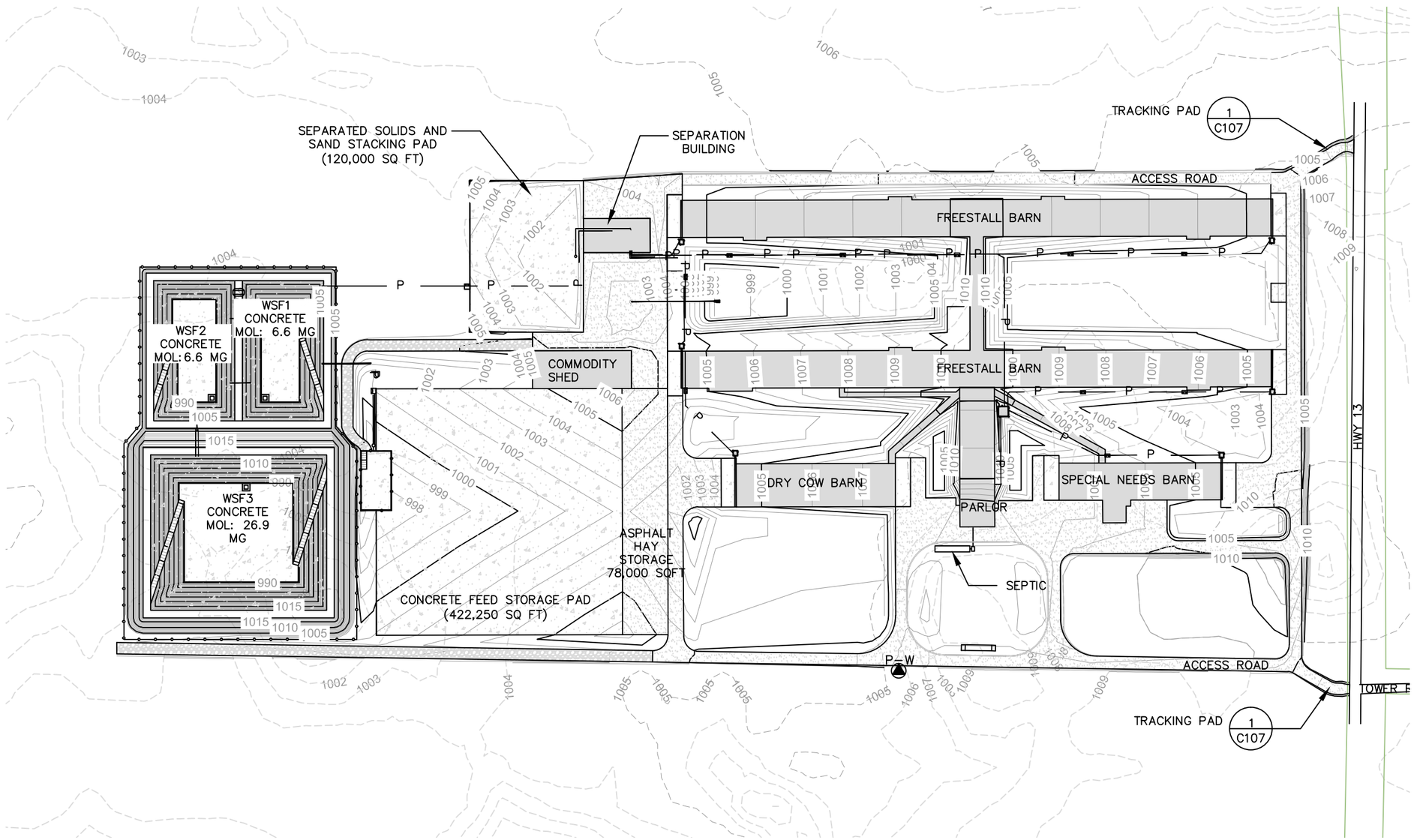

LEGEND

- PROPOSED CONTOURS
- PARCEL LINE
- BENCHMARK BM-1
- SOIL BORING SB-1
- PROPOSED WELL P-W
- PRESSURE PIPE — P —
- STORMWATER PIPE — STM —

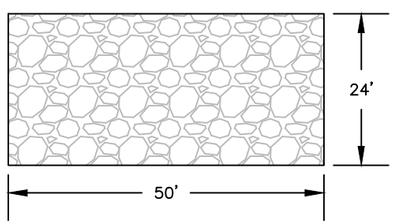

NOTES

- CONSTRUCT WITH 3-6" CLEAR STONE 12" THICK
- DIMENSIONS ARE MINIMUM UNLESS DISTANCE FROM ROAD TO BUILDING IS LESS

1 / C107 STONE TRACKING PAD DETAIL
NOT TO SCALE

EROSION CONTROL NOTES

ALL EROSION CONTROL MEASURES SHALL BE CONSTRUCTED AND MAINTAINED BY THE CONTRACTOR IN ACCORDANCE WITH DNR TECHNICAL STANDARDS.

EROSION CONTROL MEASURES SHALL BE INSTALLED PRIOR TO ANY SITE WORK. THE STORMWATER BASIN SHALL BE CONSTRUCTED AS PART OF THE EROSION CONTROL MEASURES.

EROSION CONTROL MEASURES SHALL BE INSPECTED AT LEAST WEEKLY AND AFTER A RAINFALL OF ½ INCH OR MORE WITHIN 24 HOURS. NECESSARY MAINTENANCE SHOULD FOLLOW THE INSPECTIONS WITHIN 24 HOURS. INSPECTION REPORTS SHALL BE PREPARED AND FILED AS REQUIRED BY THE DNR.

SOIL STOCKPILES SHOULD HAVE EROSION CONTROL MEASURES DOWNSTREAM OR BE SEEDED IF PLANNED TO BE LEFT FOR OVER 14 DAYS. SOIL STOCKPILES SHOULD NOT BE PLACE WITHIN 20 FEET OF A DRAINAGE WAY.

ALL DISTURBED AREAS SHALL BE SEEDED AND MULCHED WITHIN 14 DAYS OF FINAL GRADING

EROSION CONTROL MEASURES SHALL REMAIN IN PLACE UNTIL CONSTRUCTION IS COMPLETE AND SOIL SURFACES HAVE BEEN STABILIZED.

N W E S

0 300 600

REVISIONS:
DATE
DATE
DATE
DATE

RESOURCE ENGINEERING ASSOCIATES, INC.
Resource Engineering Associates, Inc.
3510 Parmenter St., Suite 100
Middleton, Wisconsin 53562-2507
Phone: 608-831-5522
Fax: 608-831-6564
Web: www.reaeng.com

EROSION CONTROL PLAN
FACILITY SITE PLAN
GOLDEN SANDS DAIRY
8550 CENTRAL SANDS ROAD
BANCROFT, WI 54921

DATE: AUG 2013
DRAWN: EML
CHECKED: DRW
APPROVED: RJP
DRAWING NAME: 1232site6.1.dwg
PROJECT NUMBER: 120032.1

C107

N:\REA12\Wysocki120032_1\Civil\1232site6.1.dwg

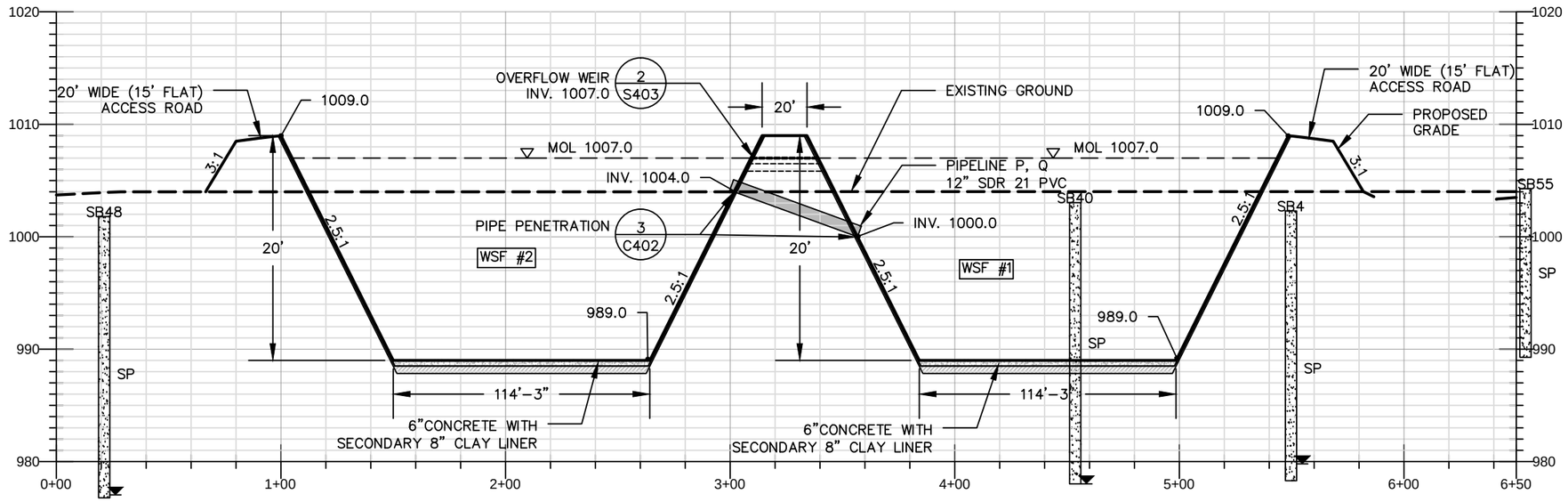

GROUNDWATER LEVEL TYPICAL

EXCAVATING CONTRACTOR TO NOTIFY ENGINEER WHEN EXCAVATION IS WITHIN 2 FEET OF PROPOSED BOTTOM

1 / C300 BASIN SECTION
WSF #1 & #2 WEST-EAST

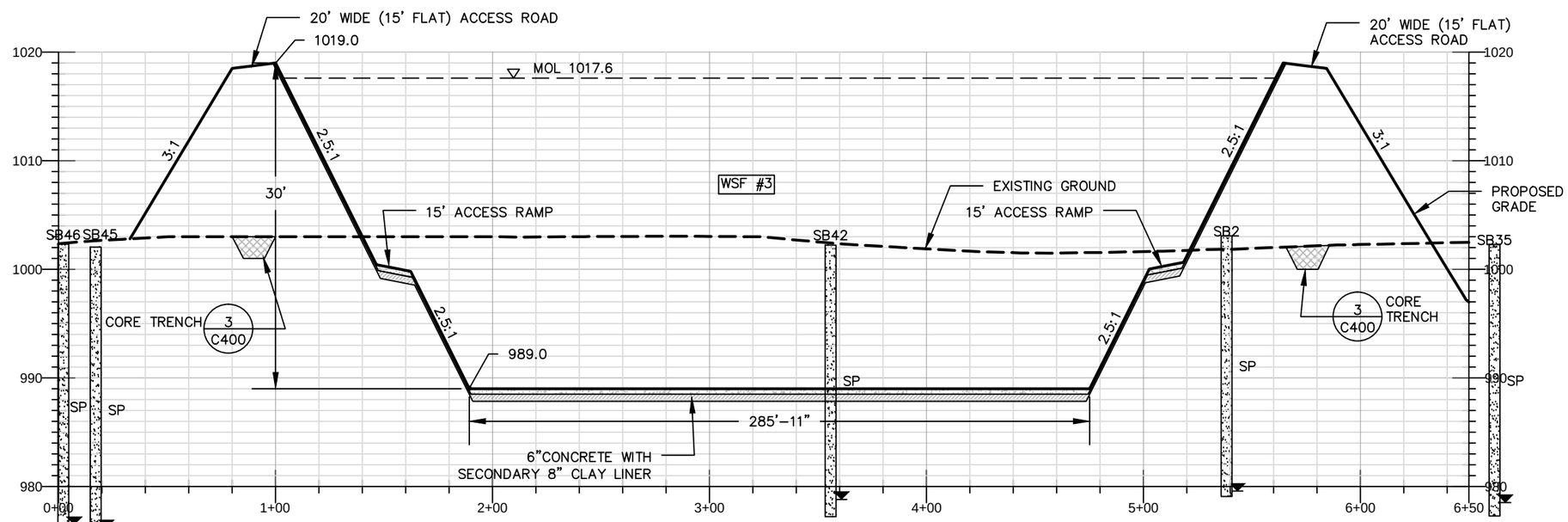

2 / C300 BASIN SECTION
WSF #3 WEST-EAST

REVISIONS:
DATE
DATE
DATE
DATE

RESOURCE ENGINEERING ASSOCIATES, INC.
Resource Engineering Associates, Inc.
3510 Parmenter St., Suite 100
Middleton, Wisconsin 53562-2507
Phone: 608-831-5522
Fax: 608-831-6564
Web: www.reaeng.com

MANURE BASIN CROSS SECTIONS
FACILITY SITE PLAN
GOLDEN SANDS DAIRY
8550 CENTRAL SANDS ROAD
BANCROFT, WI 54921

DATE: AUG 2013
DRAWN: EML
CHECKED: DRW
APPROVED: RJP
DRAWING NAME: 1232site6.1.dwg
PROJECT NUMBER: 120032.1

C300

N:\REA12\Wysocki120032_1\Civil\1232site6.1.dwg

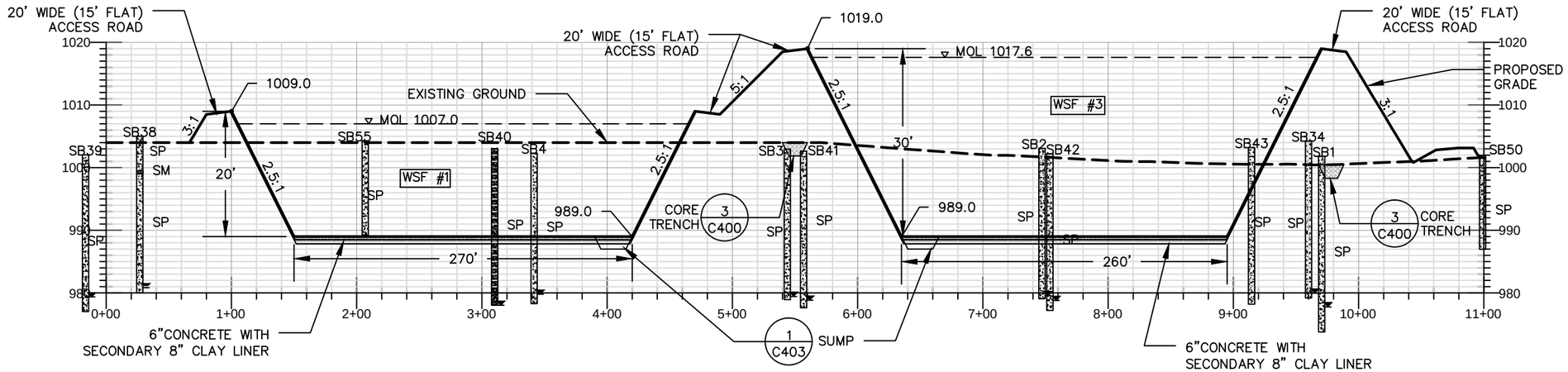

GROUNDWATER LEVEL TYPICAL
EXCAVATING CONTRACTOR TO NOTIFY ENGINEER WHEN EXCAVATION IS WITHIN 2 FEET OF PROPOSED BOTTOM

1 / C301 BASIN SECTION
WSF #1 & #3 NORTH–SOUTH

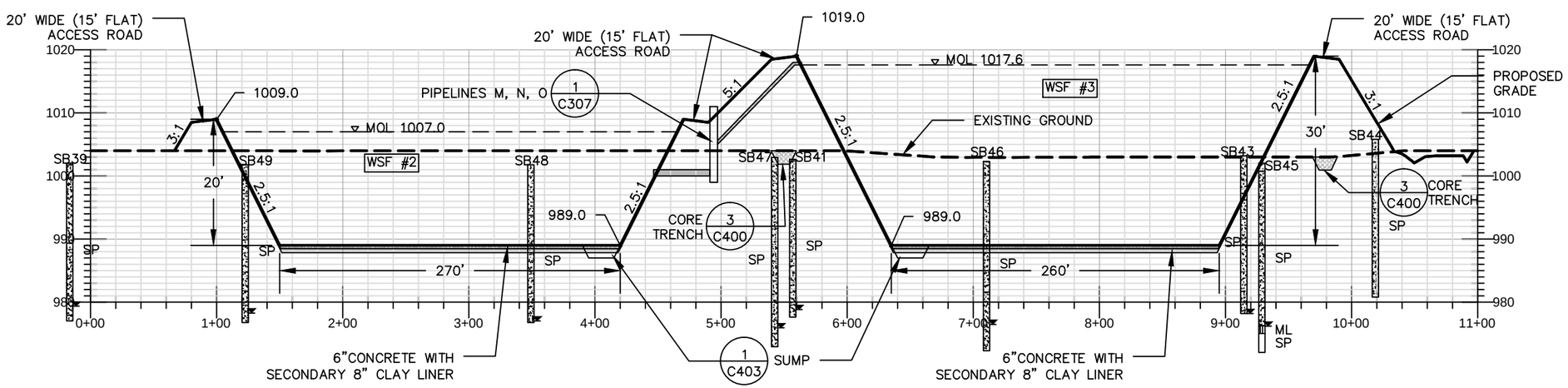

2 / C301 BASIN SECTION
WSF #2 & #3 NORTH–SOUTH

REVISIONS:
DATE
DATE
DATE
DATE

RESOURCE ENGINEERING ASSOCIATES, INC.
Resource Engineering Associates, Inc.
3510 Parmenter St., Suite 100
Middleton, Wisconsin 53562-2507
Phone: 608-831-5522
Fax: 608-831-6564
Web: www.reaeng.com

MANURE BASIN CROSS SECTIONS
FACILITY SITE PLAN
GOLDEN SANDS DAIRY
8550 CENTRAL SANDS ROAD
BANCROFT, WI 54921

DATE: AUG 2013
DRAWN: EML
CHECKED: DRW
APPROVED: RJP
DRAWING NAME: 1232site6.1.dwg
PROJECT NUMBER: 120032.1

C301

N:\REA12\Wysocki120032_1\Civil\1232site6.1.dwg

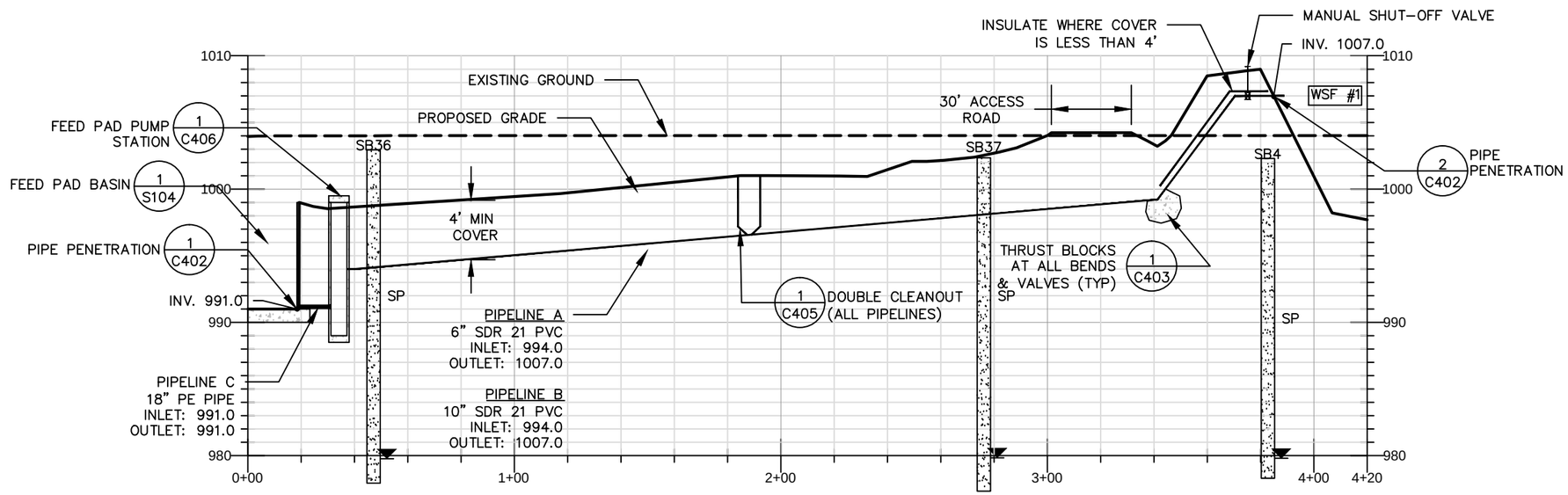

GROUNDWATER LEVEL TYPICAL

1 C302 PIPELINE A (PIPELINE B SIMILAR)
FEED PAD BASIN TO WSF #1

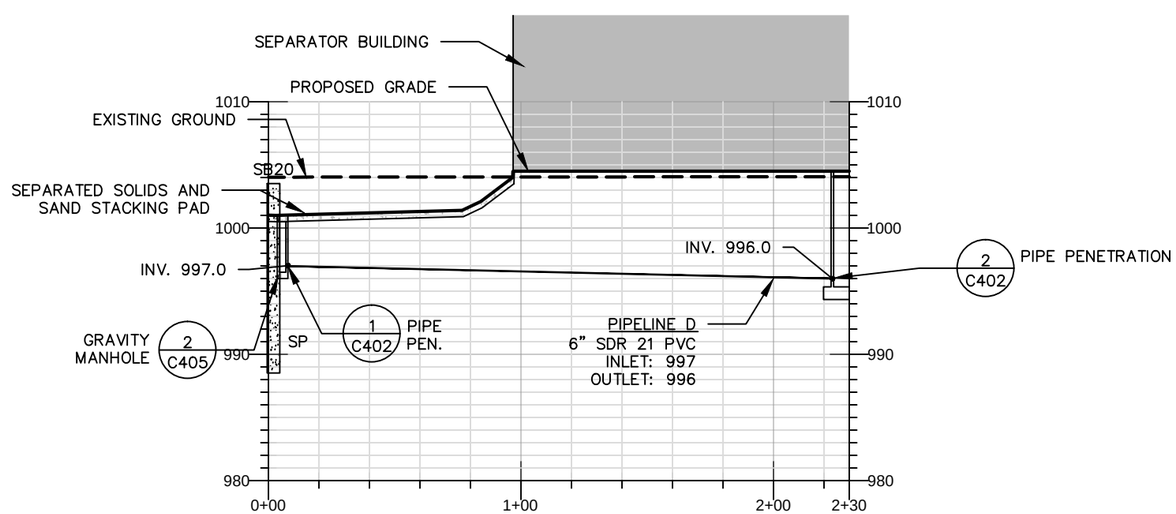

2 C302 PIPELINE D
SOLIDS PAD BASIN TO SPARATION BLDG

REVISIONS:
DATE
DATE
DATE
DATE

RESOURCE ENGINEERING ASSOCIATES, INC.
Resource Engineering Associates, Inc.
3510 Parmenter St., Suite 100
Middleton, Wisconsin 53562-2507
Phone: 608-831-5522
Fax: 608-831-6564
Web: www.reaeng.com

PIPE PROFILES
FACILITY SITE PLAN
GOLDEN SANDS DAIRY
8550 CENTRAL SANDS ROAD
BANCROFT, WI 54921

DATE: AUG 2013
DRAWN: EML
CHECKED: DRW
APPROVED: RJP
DRAWING NAME: 1232site6.1.dwg
PROJECT NUMBER: 120032.1

C302

N:\REA12\Wysocki120032_1\Civil\1232site6.1.dwg

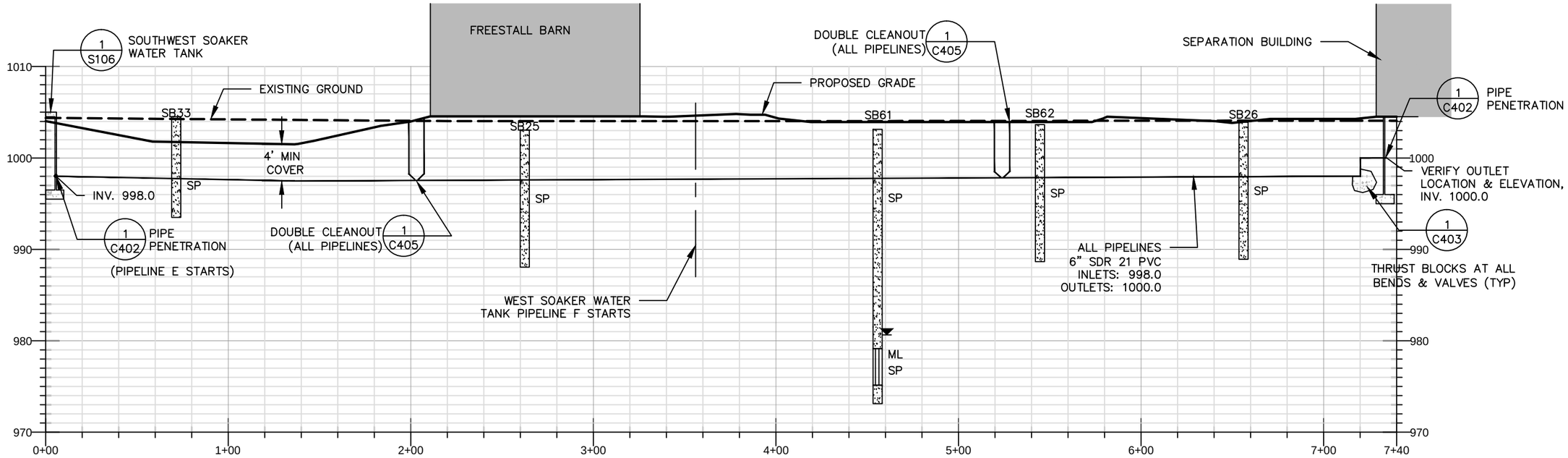

GROUNDWATER LEVEL TYPICAL

1 C303 PIPELINES E, F
WEST SOAKER TANKS TO SEPARATION BLDG

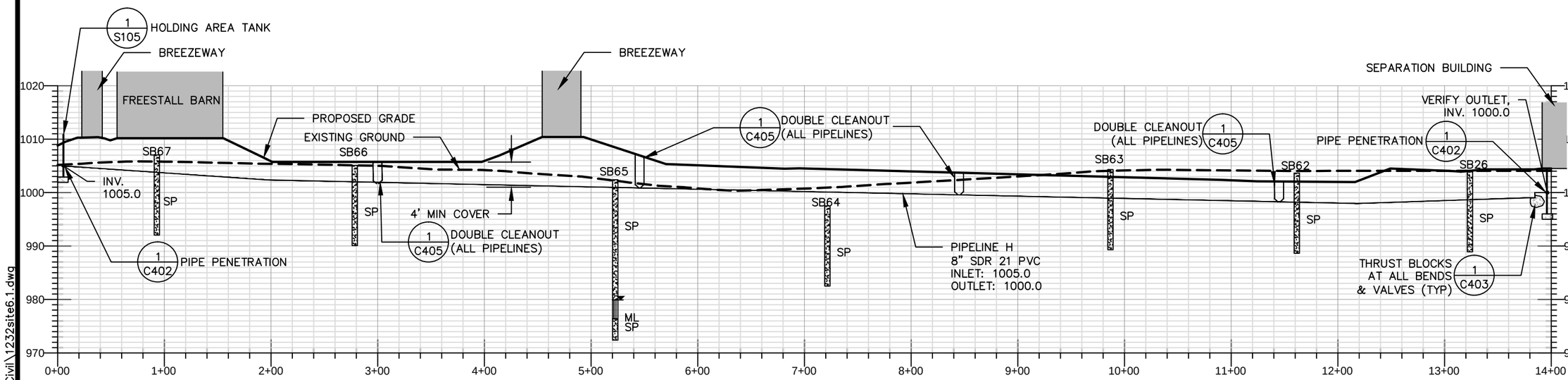

2 C303 PIPELINE H
HOLDING TANK TO SEPARATION BLDG

N:\REA12\Wysocki120032_1\Civil\1232site6.1.dwg

REVISIONS:
DATE
DATE
DATE
DATE

Resource Engineering Associates, Inc.
3510 Parmenter St., Suite 100
Middleton, Wisconsin 53562-2507
Phone: 608-831-5522
Fax: 608-831-6564
Web: www.reaeng.com
RESOURCE ENGINEERING ASSOCIATES, INC.

PIPE PROFILES
FACILITY SITE PLAN
GOLDEN SANDS DAIRY
8550 CENTRAL SANDS ROAD
BANCROFT, WI 54921

DATE: AUG 2013
DRAWN: EML
CHECKED: DRW
APPROVED: RJP
DRAWING NAME: 1232site6.1.dwg
PROJECT NUMBER: 120032.1

C303

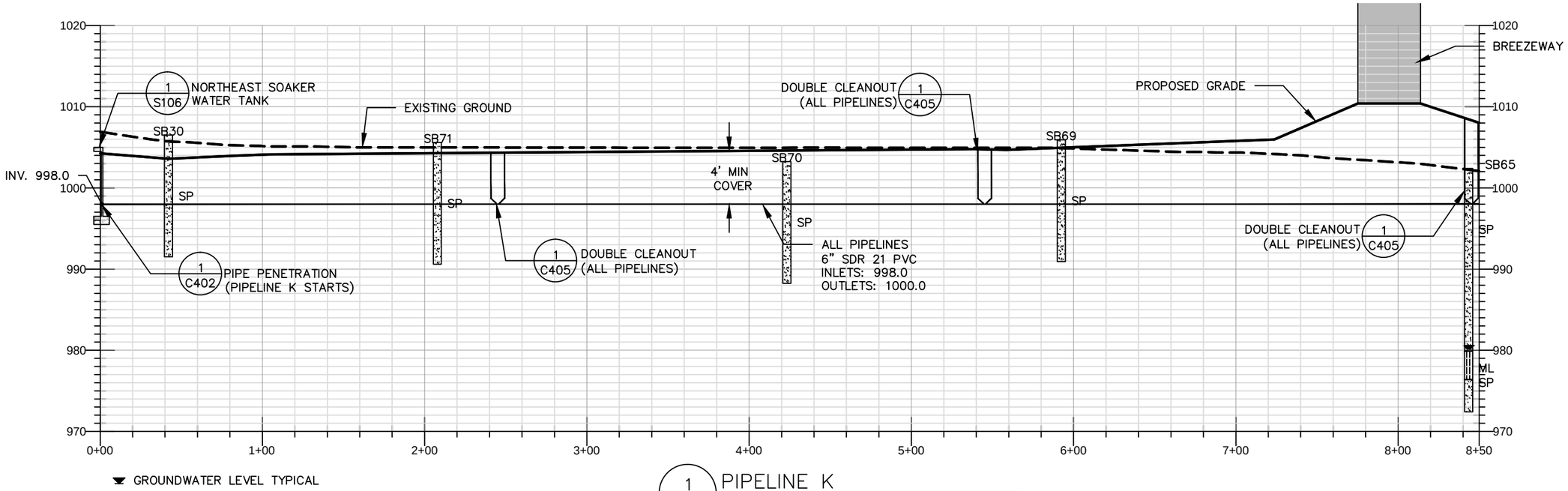

1 C304 PIPELINE K
NE SOAKER TANKS TO SEPARATION BLDG

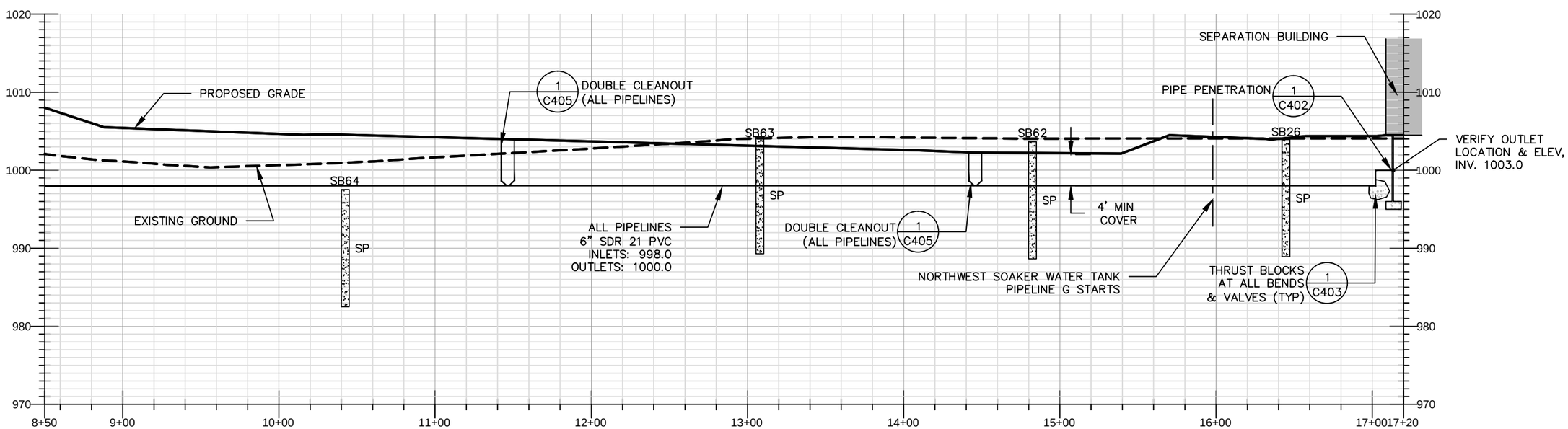

2 C304 PIPELINES K (CONTINUED), G
NW & NE SOAKER TANKS TO SEPARATION BLDG

N:\REA12\Wysocki120032_1\Civil\1232site6.1.dwg

REVISIONS:
DATE
DATE
DATE
DATE

RESOURCE ENGINEERING ASSOCIATES, INC.
Resource Engineering Associates, Inc.
3510 Parmenter St., Suite 100
Middleton, Wisconsin 53562-2507
Phone: 608-831-5522
Fax: 608-831-6564
Web: www.reaeng.com

PIPE PROFILES
FACILITY SITE PLAN
GOLDEN SANDS DAIRY
8550 CENTRAL SANDS ROAD
BANCROFT, WI 54921

DATE: AUG 2013
DRAWN: EML
CHECKED: DRW
APPROVED: RJP
DRAWING NAME: 1232site6.1.dwg
PROJECT NUMBER: 120032.1

C304

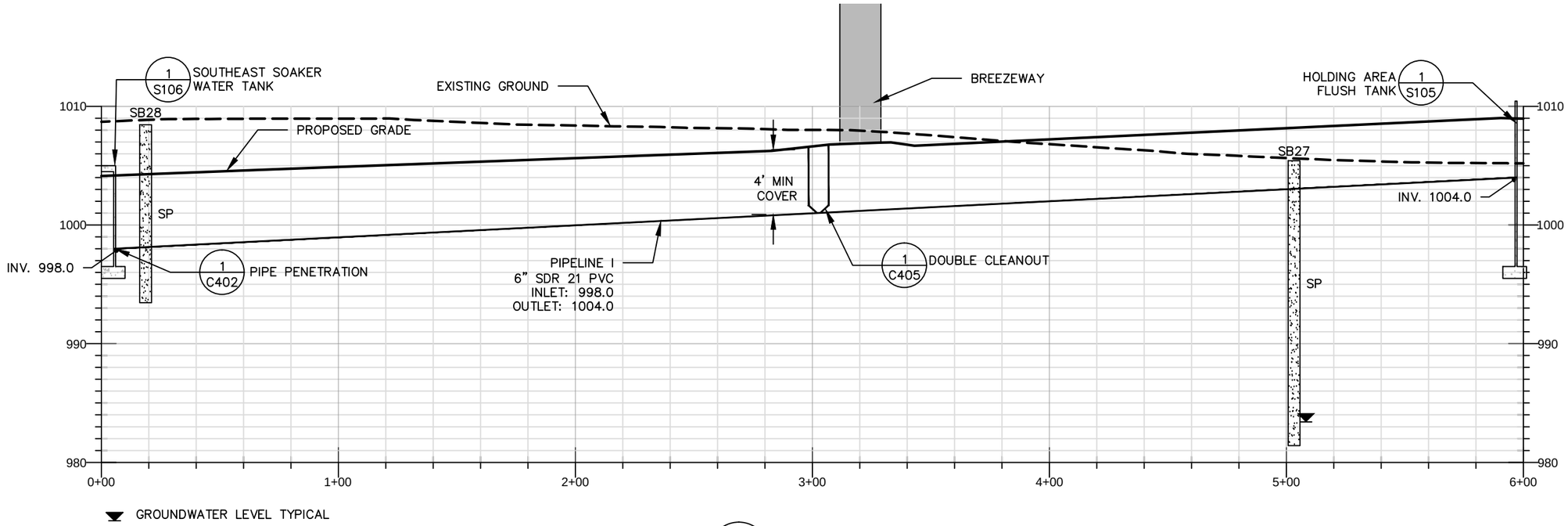

1 C305 PIPELINE I
SE SOAKER TANK TO HOLDING TANK

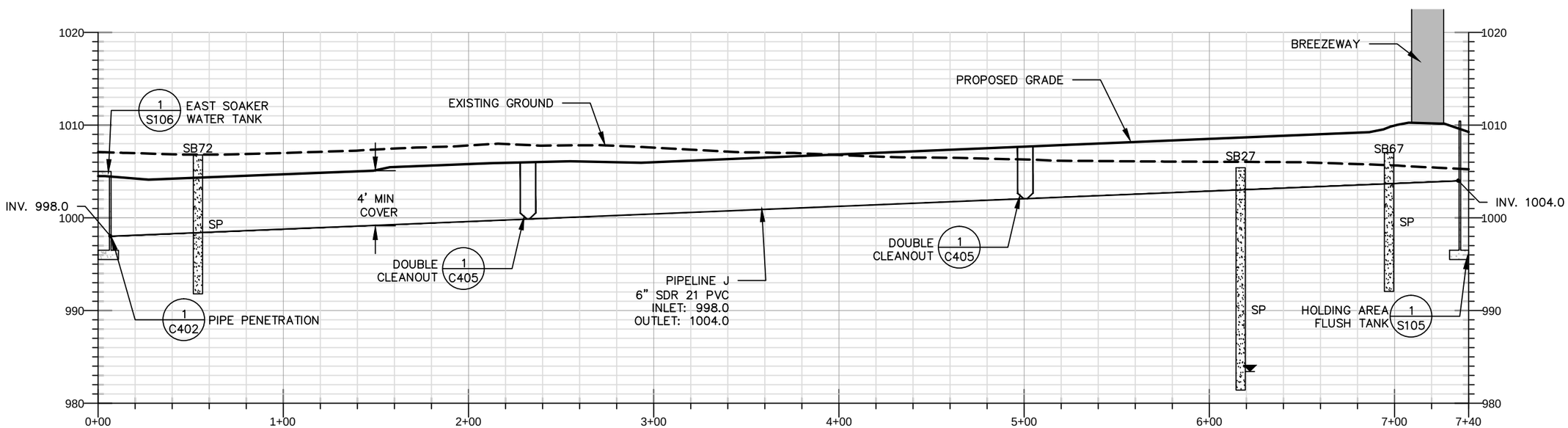

2 C305 PIPELINE J
E SOAKER TANK TO HOLDING TANK

REVISIONS:
DATE
DATE
DATE
DATE

RESOURCE ENGINEERING ASSOCIATES, INC.
Resource Engineering Associates, Inc.
3510 Parmenter St., Suite 100
Middleton, Wisconsin 53562-2507
Phone: 608-831-5522
Fax: 608-831-6564
Web: www.reaeng.com

PIPE PROFILES
FACILITY SITE PLAN
GOLDEN SANDS DAIRY
8550 CENTRAL SANDS ROAD
BANCROFT, WI 54921

DATE: AUG 2013
DRAWN: EML
CHECKED: DRW
APPROVED: RJP
DRAWING NAME: 1232site6.1.dwg
PROJECT NUMBER: 120032.1

C305

N:\REA12\Wysocki120032_1\Civil\1232site6.1.dwg

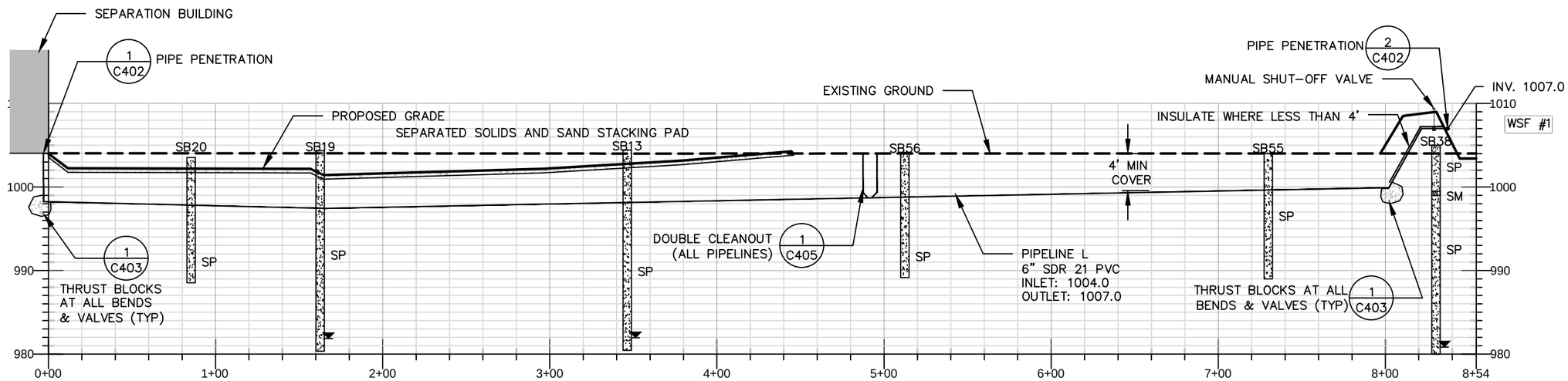

GROUNDWATER LEVEL TYPICAL

1 / C306 PIPELINE L
SEPARATION BLDG TO WSF #1

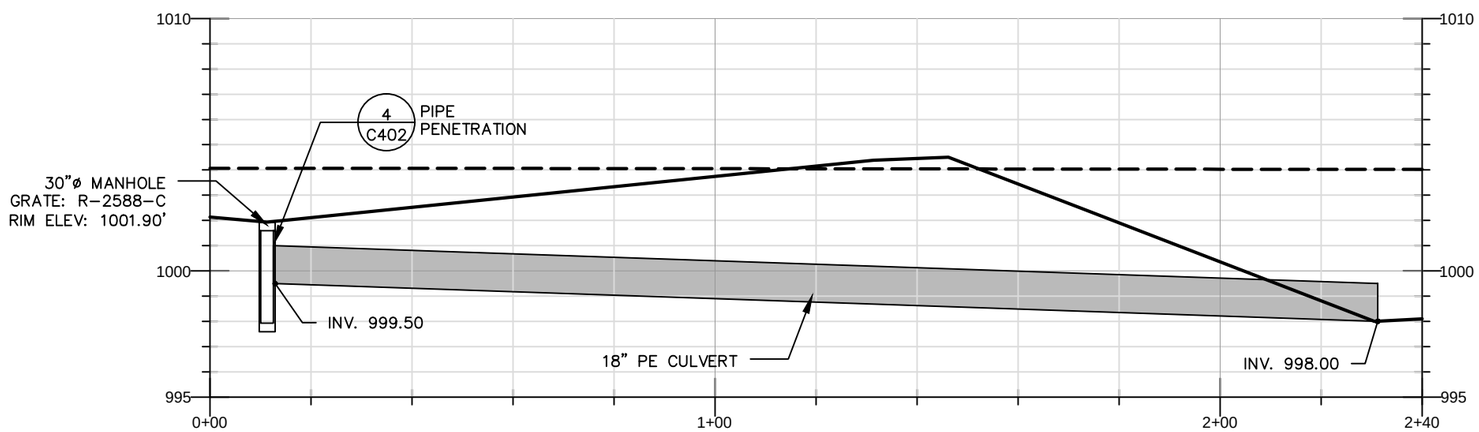

2 / C306 STORMWATER CULVERT

REVISIONS:
DATE
DATE
DATE
DATE

RESOURCE ENGINEERING ASSOCIATES, INC.
Resource Engineering Associates, Inc.
3510 Parmenter St., Suite 100
Middleton, Wisconsin 53562-2507
Phone: 608-831-5522
Fax: 608-831-6564
Web: www.reaeng.com

PIPE PROFILES
FACILITY SITE PLAN
GOLDEN SANDS DAIRY
8550 CENTRAL SANDS ROAD
BANCROFT, WI 54921

DATE: AUG 2013
DRAWN: EML
CHECKED: DRW
APPROVED: RJP
DRAWING NAME: 1232site6.1.dwg
PROJECT NUMBER: 120032.1

C306

N:\REA12\Wysocki120032_1\Civil\1232site6.1.dwg

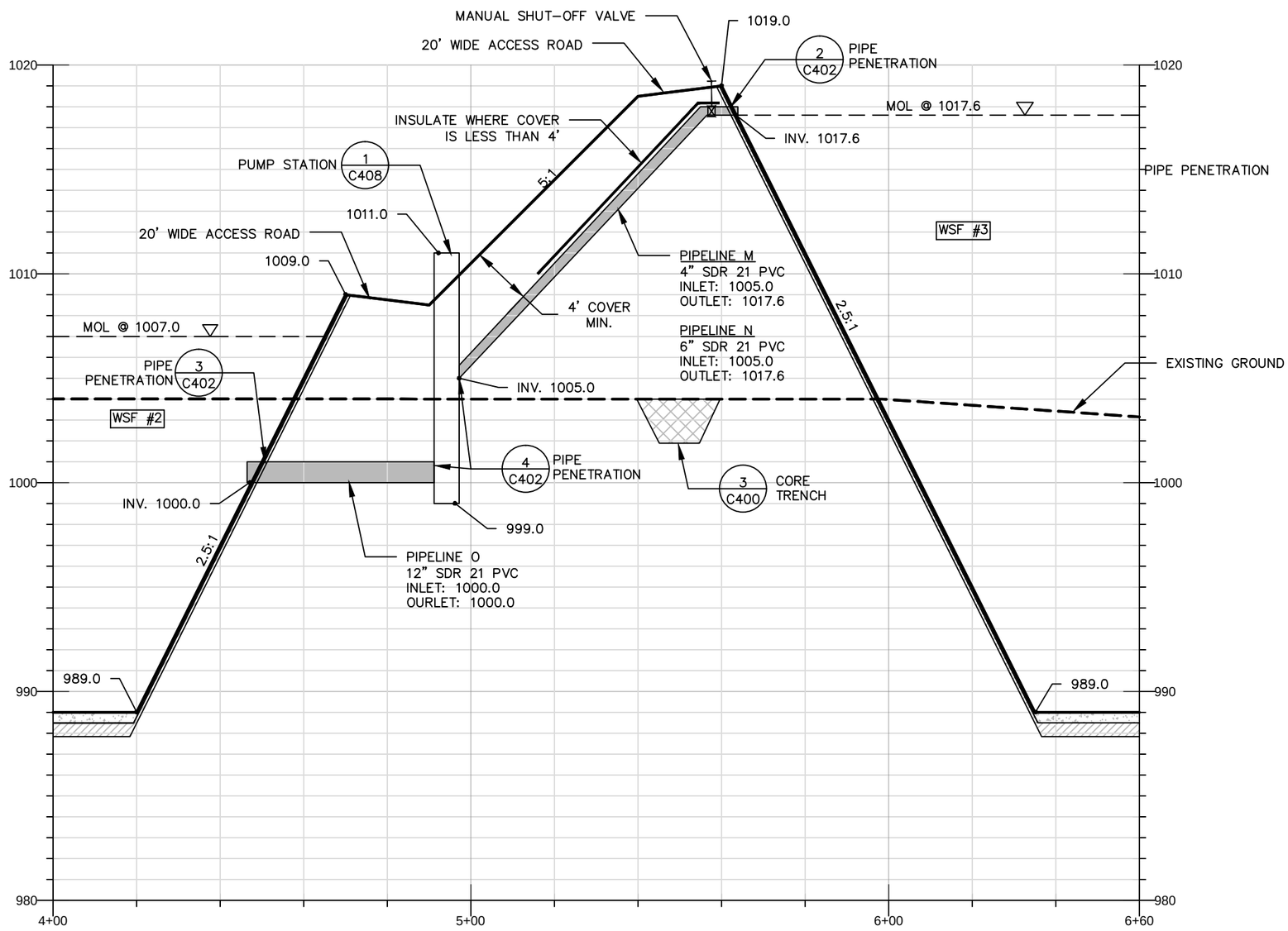

1 C307 PIPELINE M (PIPELINE N SIMILAR)
MANHOLE TO WSF #3

REVISIONS:
DATE
DATE
DATE
DATE

Resource Engineering Associates, Inc.
3510 Parmenter St., Suite 100
Middleton, Wisconsin 53562-2507
Phone: 608-831-5522
Fax: 608-831-6564
Web: www.reaeng.com

RESOURCE ENGINEERING ASSOCIATES, INC.

MANHOLE CROSS SECTION
FACILITY SITE PLAN
GOLDEN SANDS DAIRY
8550 CENTRAL SANDS ROAD
BANCROFT, WI 54921

DATE: AUG 2013
DRAWN: EML
CHECKED: DRW
APPROVED: RJP
DRAWING NAME: 1232site6.1.dwg
PROJECT NUMBER: 120032.1

C307

N:\REA12\Wysocki120032_1\Civil\1232site6.1.dwg

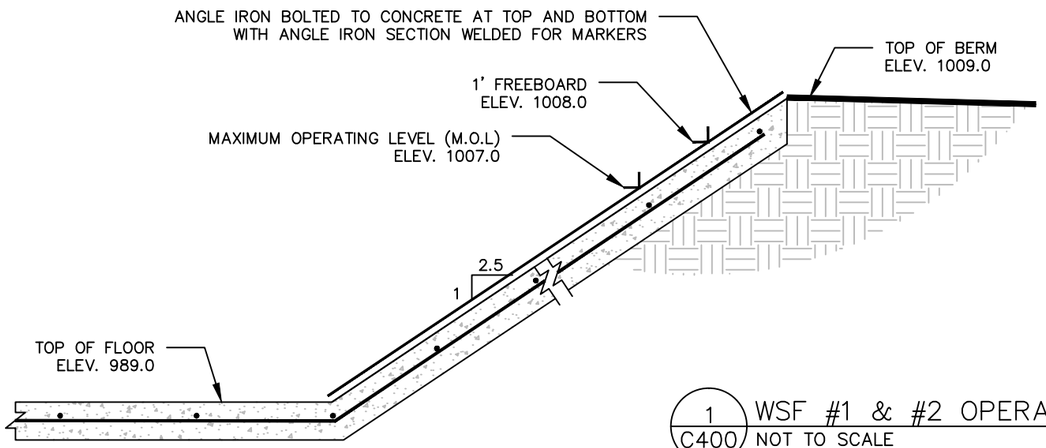

1 / C400 WSF #1 & #2 OPERATING LEVEL MARKERS
NOT TO SCALE

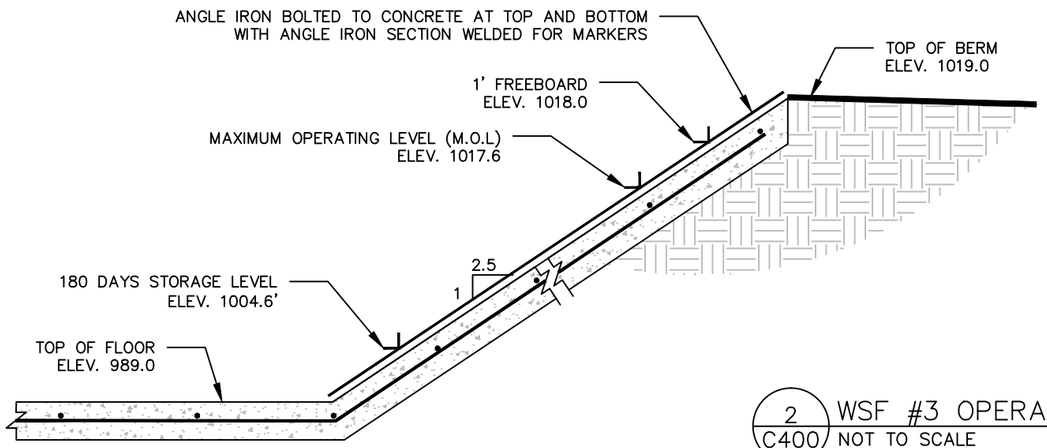

2 / C400 WSF #3 OPERATING LEVEL MARKERS
NOT TO SCALE

CORE TRENCH REQUIRED WHEN EMBANKMENT CENTERLINE
HEIGHT IS 8' OR GREATER (OPTIONAL AT LESS THAN 8')

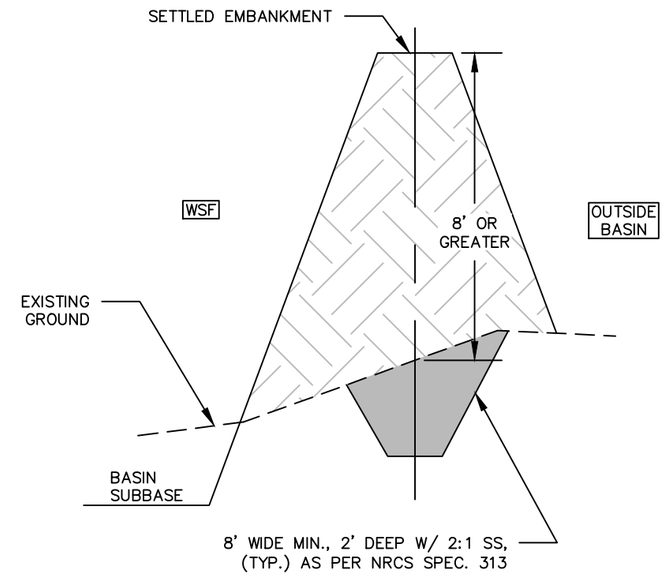

3 / C400 CORE TRENCH DETAIL
NOT TO SCALE

REVISIONS:
DATE
DATE
DATE
DATE

RESOURCE ENGINEERING ASSOCIATES, INC.
Resource Engineering Associates, Inc.
3510 Parmenter St., Suite 100
Middleton, Wisconsin 53562-2507
Phone: 608-831-5522
Fax: 608-831-6564
Web: www.reaeng.com

BASIN DETAILS
FACILITY SITE PLAN
GOLDEN SANDS DAIRY
8550 CENTRAL SANDS ROAD
BANCROFT, WI 54921

DATE: AUG 2013
DRAWN: EML
CHECKED: DRW
APPROVED: RJP
DRAWING NAME: 1232details6.dwg
PROJECT NUMBER: 120032.1

C400

N:\REA12\Wysocki120032_1\Civil\1232details6.dwg

WOVEN WIRE
WITH BARBWIRE STRAND TO MEET 48" REQUIREMENT FROM GROUND

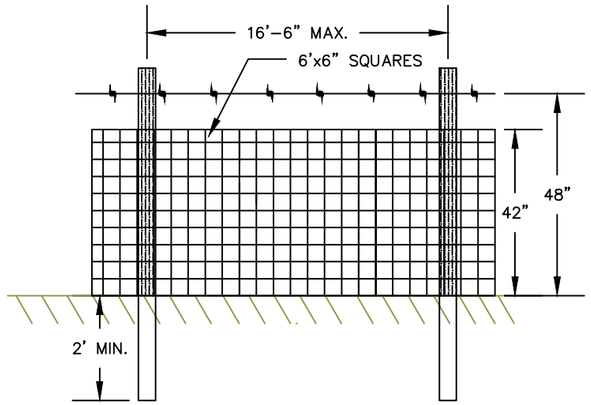

WOVEN WIRE
48" HIGH REQUIREMENT FROM GROUND

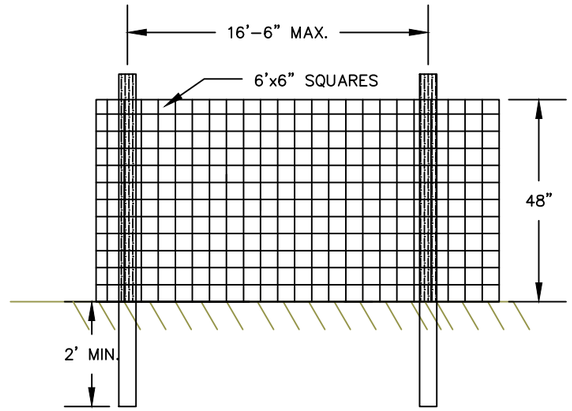

FENCE WITH WIRE: ELECTRIC OR NON-ELECTRIC
4 STRANDS MINIMUM, TOP STRAND TO MEET 48" REQUIREMENT FROM GROUND

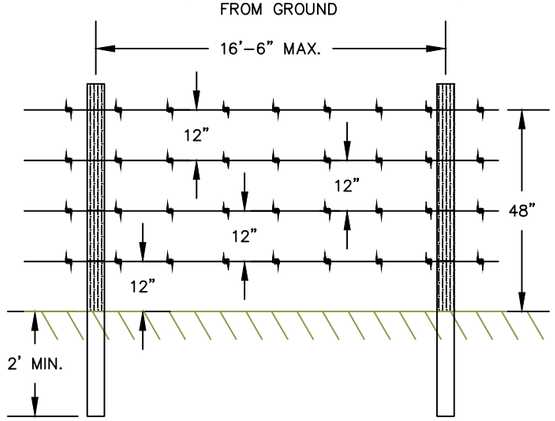

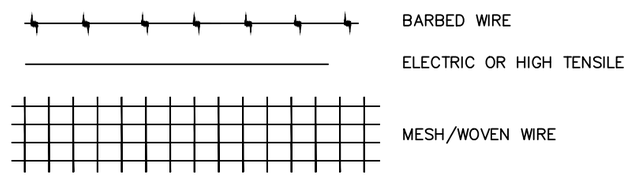

FENCE REQUIREMENTS:

A FENCE IS REQUIRED AROUND WASTE STORAGE FACILITIES UNLESS THE FACILITY HAS VERTICAL WALLS 5 FEET ABOVE THE GROUND SURFACE OR HAS A COVER THAT WILL SUPPORT FOOT TRAFFIC.

FENCING MUST MEET WI NRCS WI CONSTRUCTION SPECIFICATION 10. FENCES.

1. BARBED AND SMOOTH WIRE FENCES, ELECTRIC OR NONELECTRIC MUST HAVE A MINIMUM 4 STRANDS – TOP STRAND 48" HIGH. WOVEN WIRE MESH NO BIGGER THAN 6"X6" SQUARES, TOP OF MESH 48" HIGH. IF WOVEN WIRE IS LESS THAN 48" HIGH THERE MUST BE AT LEAST ONE BARBED WIRE ABOVE THE WOVEN WIRE TO MAKE THE 48" HEIGHT.
2. ALL LINE POSTS SHALL BE NO SMALLER THAN 1" FIBERGLASS OR "T" POSTS.
3. IF POSTS ARE CONCRETE FILLED PVC POSTS, PVC SLEEVES SHALL BE PLACED IN POSTS TO ACCOMMODATE FENCING, USUALLY 1/2" DIA.
4. MAXIMUM SPACING FOR PVC CONCRETE FILLED POSTS = 8', ALL OTHER POSTS MAXIMUM SPACING = 16.5'.
5. CORNER POST ASSEMBLIES ARE NEEDED AT CORNER ANGLES (NOT JUST 90 DEGREE ANGLES).
6. GATES ARE NEEDED FOR POINTS OF AGITATION AND LOADING, SAFETY STOPS, GATES, OR BOTH MUST BE INSTALLED WHERE THERE ARE VERTICAL DROPS SUCH AS PUSH OFFS TO PREVENT ACCIDENTAL ENTRY OF MACHINERY.
7. POSTS FOR CORNER ASSEMBLIES AND GATES/SAFETY GATES MUST BE ADEQUATE TO SUPPORT THEIR INTENDED USE, IE. 6" TREATED WOOD, SQUARE OR TUBE STEEL, CONCRETE FILLED PVC.

FENCING CAN BE TIGHTENED USING RATCHETS OR TURNBUCKLES

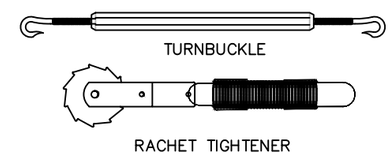

1 / C401 FENCE
NOT TO SCALE

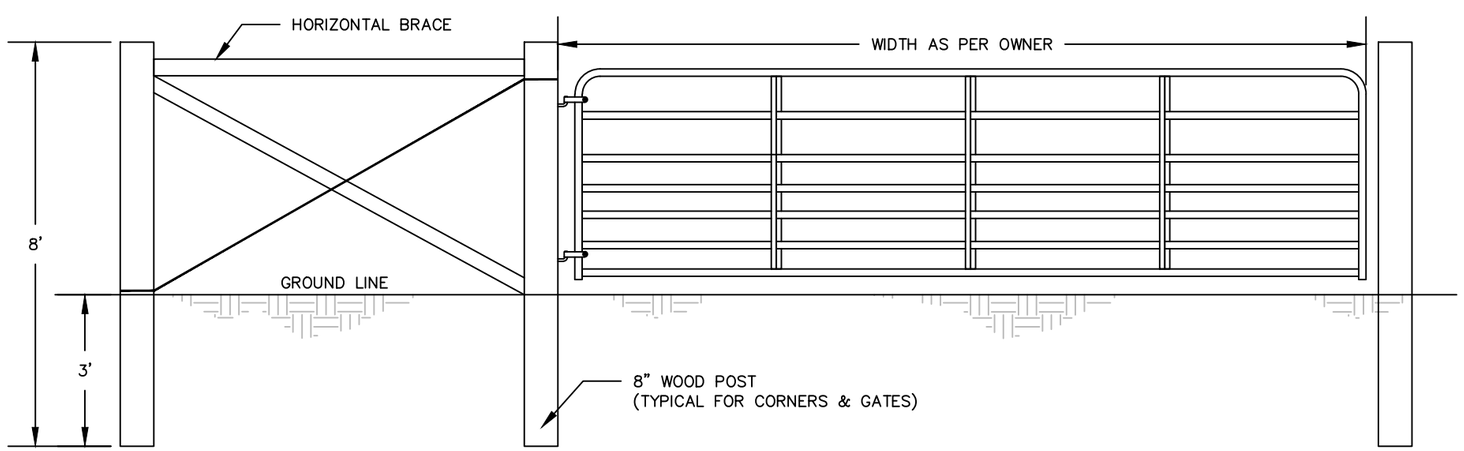

2 / C401 STEEL TUBE GATE
NOT TO SCALE (EARTH)

REVISIONS:
DATE
DATE
DATE
DATE

RESOURCE ENGINEERING ASSOCIATES, INC.
Resource Engineering Associates, Inc.
3510 Parmenter St., Suite 100
Middleton, Wisconsin 53562-2507
Phone: 608-831-5522
Fax: 608-831-6564
Web: www.reaeng.com

FENCE & GATE DETAILS
FACILITY SITE PLAN
GOLDEN SANDS DAIRY
8550 CENTRAL SANDS ROAD
BANCROFT, WI 54921

DATE: AUG 2013
DRAWN: EML
CHECKED: DRW
APPROVED: RJP
DRAWING NAME: 1232details6.dwg
PROJECT NUMBER: 120032.1

C401

N:\REA12\Wysocki120032_1\Civil\1232details6.dwg

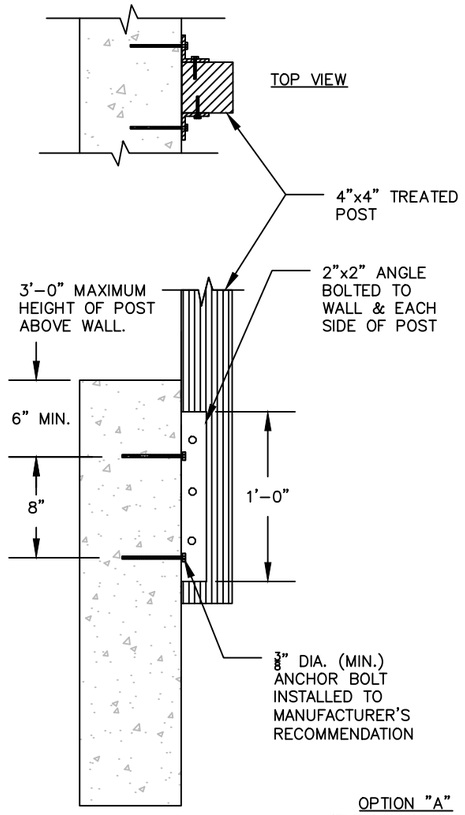

OPTION "A"
(TYPICAL SECTION)

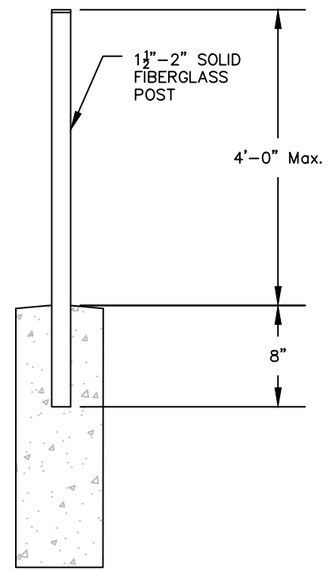

NOTE: MIN. CONCRETE COVER 3" AROUND POST.

OPTION "B"
(TYPICAL SECTION)

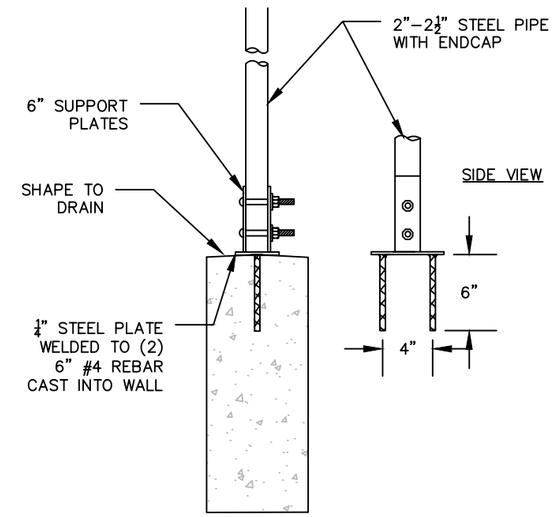

NOTE: PLATE MAY BE APPLIED USING ADHESIVE, CONCRETE ANCHORS OR SADDLE OVER TOP OF WALL.

CATING PIPE INTO WALL IS UNACCEPTABLE

OPTION "C"
(TYPICAL SECTION)

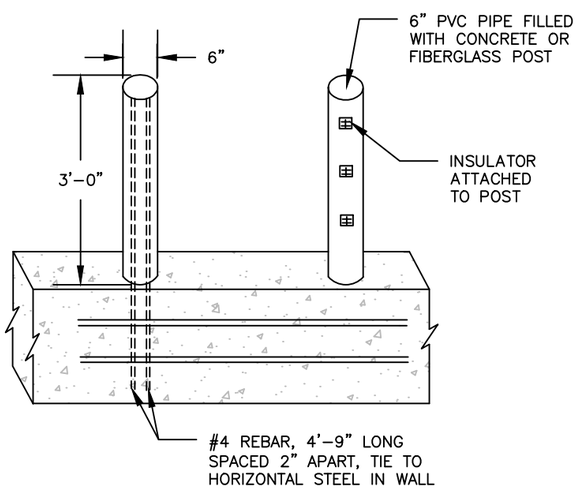

NOTES:
1. ALL STEEL WILL HAVE 1½" OF CONCRETE COVER.
2. ATTACH PLASTIC PIN LOCK INSULATORS TO POST WITH ANCHORS AND SCREWS.

OPTION "D"

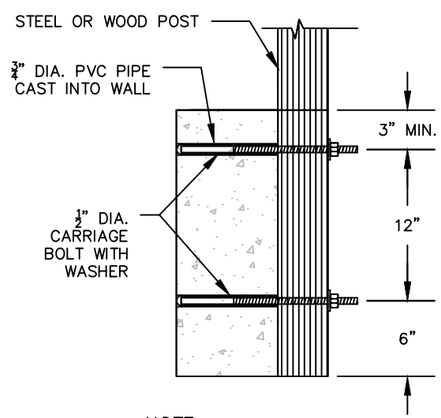

NOTE:
1. NOT FOR WASTE STORAGE FACILITIES

OPTION "E"
(TYPICAL SECTION)

GENERAL NOTES

THE OPTIONS SHOWN ARE ILLUSTRATIVE OF THE RECOMMENDED METHODS OF ATTACHING FENCE POSTS TO CONCRETE WALLS.

- CASTING STEEL PIPE OR POST INTO WALL IS UNACCEPTABLE.
- ALL EXPOSED METAL IS TO BE GALVANIZED OR COATED TO PREVENT RUST.
- WOOD IS TO BE PRESSURE-TREATED FOLLOW WI SPEC 14 TIMBER FABRICATION AND INSTALLATION.
- WHEN INSERTING ATTACHMENTS INTO TOP OF WALL, SHAPE CONCRETE TO DRAIN WATER AWAY FROM FIXTURE.
- FOR WASTE STORAGE FACILITIES CONFIRM EXPOSED WALL AND POST HEIGHT ARE 4' MINIMUM.

1 / C401.1 FENCE ATTACHMENT TO CONCRETE WALL
NTS

STANDARD NRCS DRAWING NO. WI-430

REVISIONS:
DATE
DATE
DATE
DATE

RESOURCE ENGINEERING ASSOCIATES, INC.
Resource Engineering Associates, Inc.
3510 Parmenter St., Suite 100
Middleton, Wisconsin 53562-2507
Phone: 608-831-5522
Fax: 608-831-6564
Web: www.reaeng.com

FENCE DETAIL
FACILITY SITE PLAN
GOLDEN SANDS DAIRY
8550 CENTRAL SANDS ROAD
BANCROFT, WI 54921

DATE: OCT 2013
DRAWN: EML
CHECKED: DRW
APPROVED: RJP
DRAWING NAME: 1232details6.dwg
PROJECT NUMBER: 120032.1

C401.1

N:\REA12\Wysocki120032_1\Civil\1232details6.dwg

KNOCKOUTS
1. MAXIMUM SIZE – 36" x 36" (FOR LARGER SIZES, CONSULT ENGINEER)

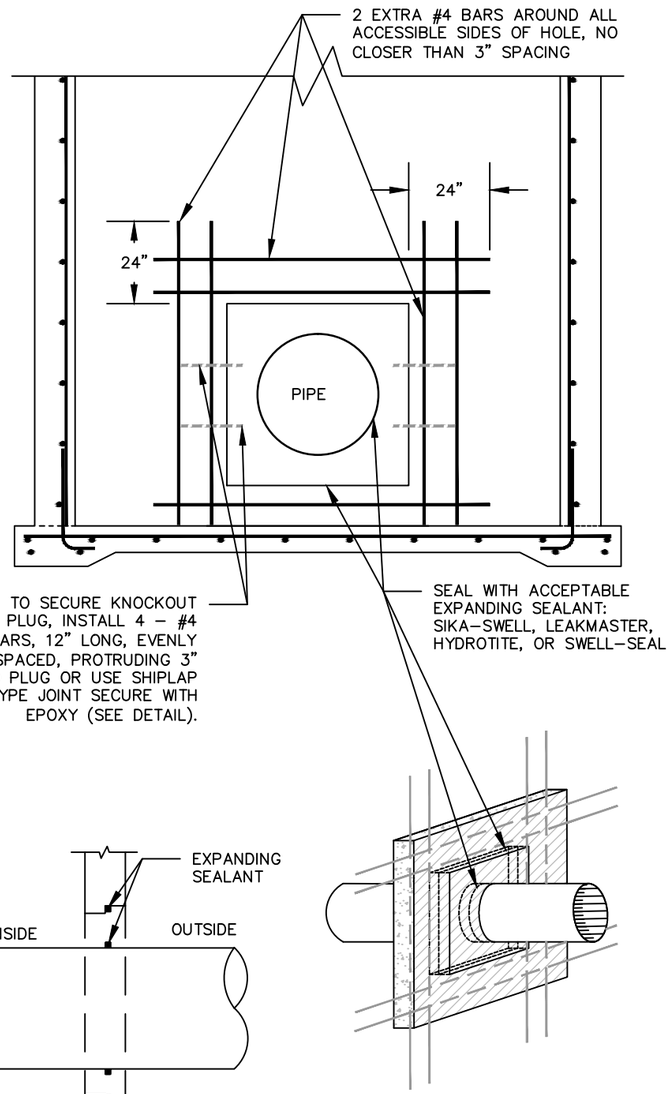

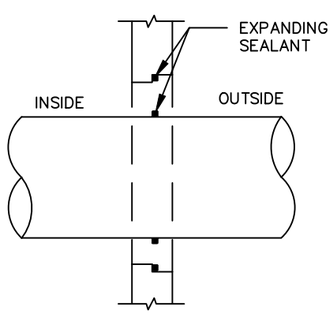

SHIPLAP JOINT DETAIL

PIPE STUBS CAST IN WALL
1. MAXIMUM PIPE SIZE – 24" DIA.

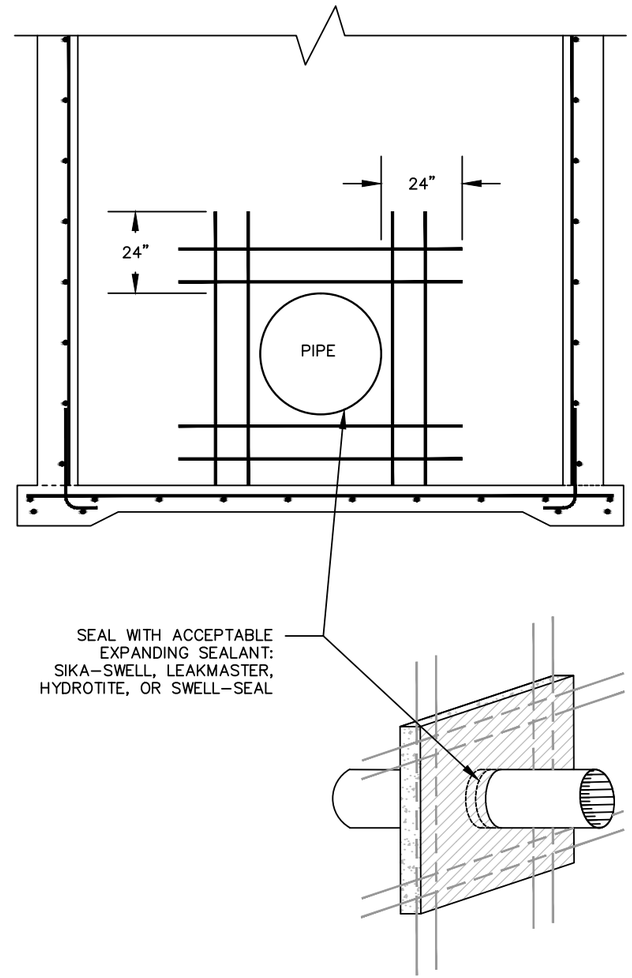

CONSTRUCTION NOTES
1. WATERSTOP DIMENSIONS SHALL BE BASED ON MANUFACTURER'S REQUIREMENTS FOR MINIMUM COVER.
2. THE WATERSTOP SHALL BE APPLIED TO EVEN SURFACES, FREE OF DIRT, OIL, OR LAITANCE.
3. THE WATERSTOP MUST BE BONDED TO THE CONCRETE AND/OR PIPE PRIOR TO PLACEMENT OF ADJOINING CONCRETE.
4. THE MANUFACTURER'S INSTALLATION INSTRUCTIONS SHALL BE FOLLOWED FOR WATERSTOP SPLICING AND ADDITIONAL INSTALLATION REQUIREMENTS.

1 / C402 PIPE PENETRATION
NOT TO SCALE

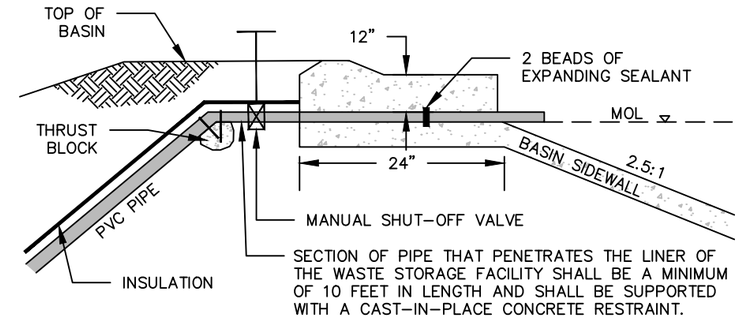

NOTE:
ALL PIPE JOINTS WITHIN 25 FEET OF WHERE THE PIPE PENETRATES THE INSIDE SURFACE OF THE WASTE STORAGE FACILITY SHALL HAVE A MECHANICAL AND/OR CONCRETE RESTRAINT.

2 / C402 PRESSURE PIPE PENETRATION
NOT TO SCALE

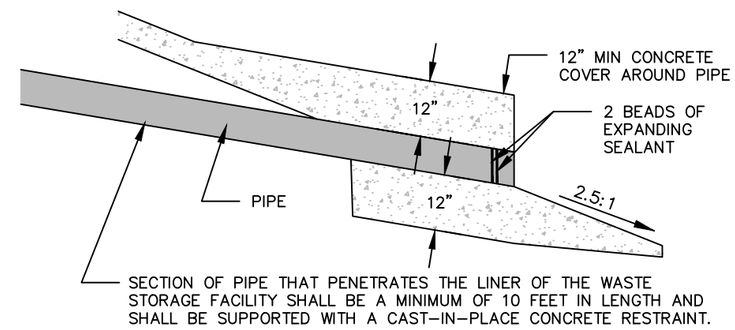

NOTE:
ALL PIPE JOINTS WITHIN 25 FEET OF WHERE THE PIPE PENETRATES THE INSIDE SURFACE OF THE WASTE STORAGE FACILITY SHALL HAVE A MECHANICAL AND/OR CONCRETE RESTRAINT.

3 / C402 PIPE PENETRATION
NOT TO SCALE

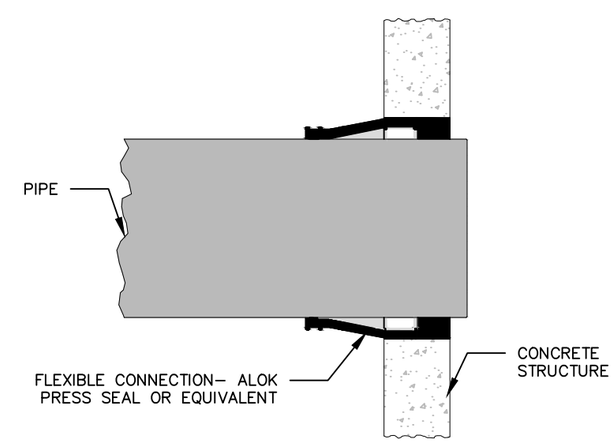

REVISIONS:
DATE
DATE
DATE
DATE

RESOURCE ENGINEERING ASSOCIATES, INC.
Resource Engineering Associates, Inc.
3510 Parmenter St., Suite 100
Middleton, Wisconsin 53562-2507
Phone: 608-831-5522
Fax: 608-831-6564
Web: www.reaeng.com

PIPE DETAILS
FACILITY SITE PLAN
GOLDEN SANDS DAIRY
8550 CENTRAL SANDS ROAD
BANCROFT, WI 54921

DATE: AUG 2013
DRAWN: EML
CHECKED: DRW
APPROVED: RJP
DRAWING NAME: 1232details6.dwg
PROJECT NUMBER: 120032.1

C402

N:\REA12\Wysocki120032_1\Civil\1232details6.dwg

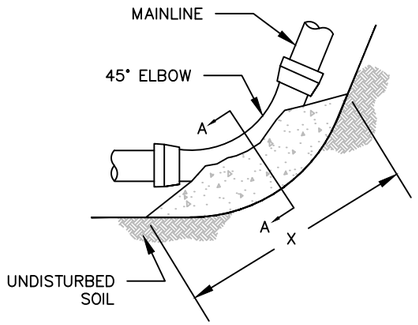

45° BEND (PLAN VIEW)

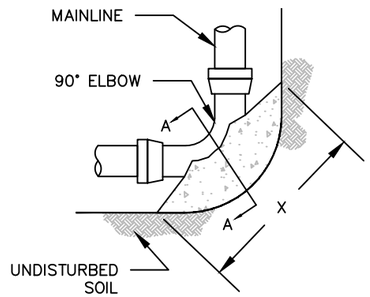

90° BEND (PLAN VIEW)

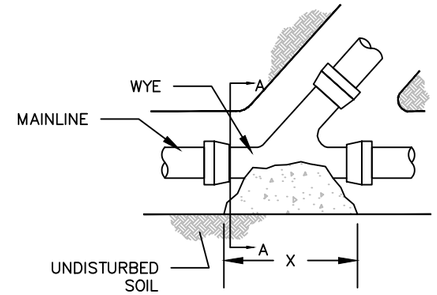

WYE (PLAN VIEW)

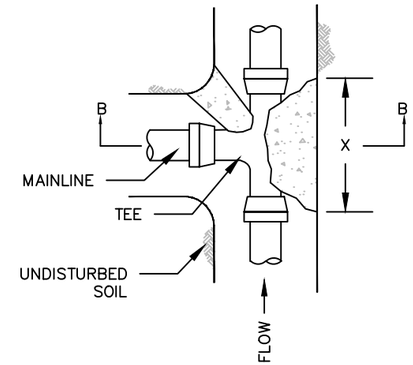

TEE (PLAN VIEW)

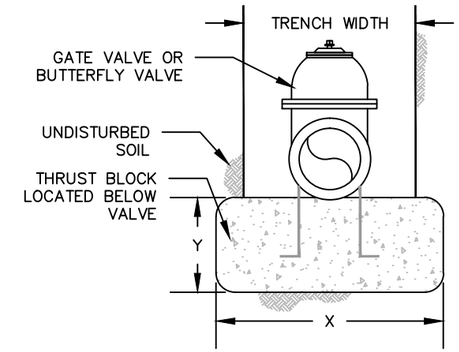

VALVE ANCHOR (SECTION VIEW)

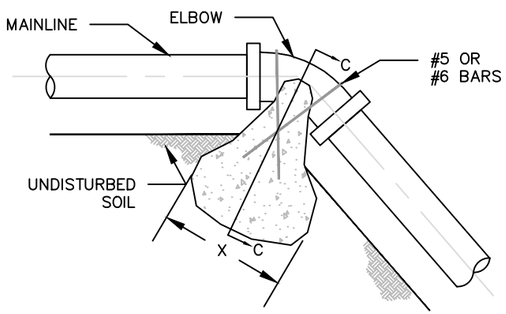

VERTICAL BEND (SECTION VIEW)

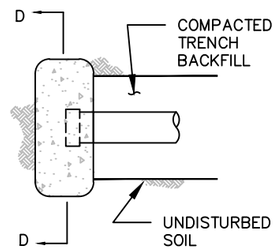

END/PLUG (PLAN VIEW)

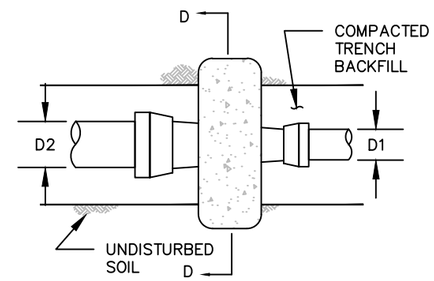

REDUCER (PLAN VIEW)

NOTES:

1. THRUST CONTROL FOR ALL BURIED PRESSURE PIPE 4" AND LARGER.
2. THRUST BLOCKS SHALL:
   - BE CAST IN-PLACE.
   - MIN. THICKNESS OF CONCRETE AROUND PIPE = 8".
   - AT PIPE TO CONCRETE CONTACT, EXTEND BELOW THE BOTTOM OF THE PIPES AND ABOVE THE TOP OF PIPE.
   - BEAR AGAINST UNDISTURBED SOIL. WHERE THIS IS NOT POSSIBLE, FILL MATERIAL BETWEEN THE BEARING SURFACE AND UNDISTURBED MAXIMUM DRY SOIL MUST BE COMPACTED TO AT LEAST 90% STANDARD PROCTOR MAXIMUM DRY DENSITY.
   - MIN. COMPRESSIVE STRENGTH 3,500 PSI CONCRETE.
3. THE RATIO OR X TO Y (THRUST BLOCK AREA) SHALL BE NO GREATER THAN 3:1.
4. THESE TABLES ARE BASED UPON AN ALLOWABLE SOIL BEARING STRENGTH OF 950 PSF. PERMISSIBLE BEARING AREAS MAY BE ADOPTED FOR OTHER SOILS OF DIFFERENT STRENGTHS AT THE DISCRETION OF THE ENGINEER.
5. THESE TABLES ARE ADEQUATE FOR SILT-CLAY SOILS AT DEPTH OF COVER OF 4'.
6. ALL TEES, ELBOWS, AND COLLARS MUST BE AT LEAST ONE PRESSURE RATING HIGHER THAN THE PIPE BEING INSTALLED.
7. COVER ALL FITTINGS WITH PLASTIC SHEETING (5 MIL MIN. THICKNESS) PRIOR TO POURING CONCRETE. CARE SHALL BE TAKEN THAT THE JOINT, INCLUDING BOLTS, WILL REMAIN ACCESSIBLE.

1 / C403 THRUST BLOCKS
NOT TO SCALE

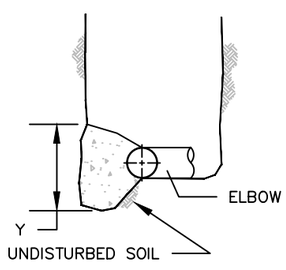

SECTION A–A

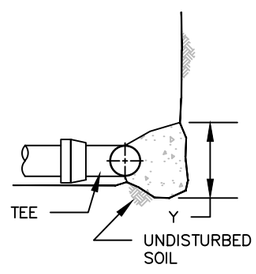

SECTION B–B

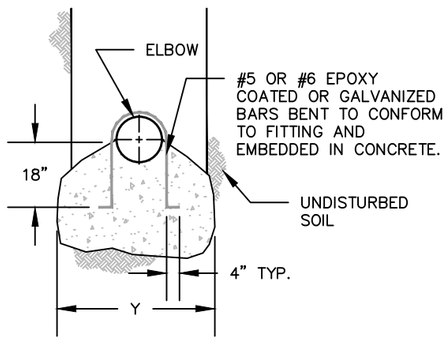

SECTION C–C

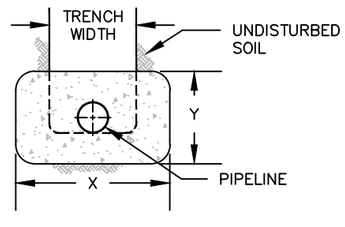

SECTION D–D

Silt and Clay Mixture - 4ft Depth of Cover			
Thrust Block Areas			
45	bends		
950	soil bearing pressure		
	Pressure		
Pipe	75	100	125
2	0.2	0.3	0.3
3	0.4	0.6	0.7
4	0.8	1.0	1.3
6	1.7	2.3	2.8
8	3.0	4.0	5.1
10	4.7	6.3	7.9
12	6.8	9.1	11.4
14	9.3	12.4	15.5
15	10.7	14.2	17.8
16	12.1	16.2	20.2
18	15.4	20.5	25.6
20	19.0	25.3	31.6
24	27.3	36.4	45.6

Silt and Clay Mixture - 4ft Depth of Cover			
Thrust Block Areas			
90	bends		
950	soil bearing pressure		
	Pressure		
Pipe	75	100	125
2	0.4	0.5	0.6
3	0.8	1.1	1.3
4	1.4	1.9	2.3
6	3.2	4.2	5.3
8	5.6	7.5	9.4
10	8.8	11.7	14.6
12	12.6	16.8	21.0
14	17.2	22.9	28.6
15	19.7	26.3	32.9
16	22.4	29.9	37.4
18	28.4	37.9	47.4
20	35.1	46.8	58.5
24	50.5	67.3	84.2

Silt and Clay Mixture - 4ft Depth of Cover			
Thrust Block Areas			
	Tees, Wyes, Ends, & Valves		
950	soil bearing pressure		
	Pressure		
Pipe	75	100	125
2	0.2	0.3	0.4
3	0.6	0.7	0.9
4	1.0	1.3	1.7
6	2.2	3.0	3.7
8	4.0	5.3	6.6
10	6.2	8.3	10.3
12	8.9	11.9	14.9
14	12.2	16.2	20.3
15	14.0	18.6	23.3
16	15.9	21.2	26.5
18	20.1	26.8	33.5
20	24.8	33.1	41.3
24	35.7	47.6	59.5

Silt and Clay Mixture - 4ft Depth of Cover			
Thrust Block Areas			
Reducers			
950	soil bearing pressure		
	Pressure		
Pipe	75	100	125
4 x 6	1.2	1.7	2.1
4 x 8	3.0	4.0	5.0
6 x 8	1.7	2.3	2.9
6 x 10	4.0	5.3	6.6
8 x 10	2.2	3.0	3.7
8 x 12	5.0	6.6	8.3
10 x 12	2.7	3.6	4.5
10 x 14	6.0	7.9	9.9
12 x 14	3.2	4.3	5.4
12 x 15	5.0	6.7	8.4
12 x 16	6.9	9.3	11.6
14 x 15	1.8	2.4	3.0
14 x 16	3.7	5.0	6.2
15 x 16	1.9	2.6	3.2
15 x 18	6.1	8.2	10.2
16 x 18	4.2	5.6	7.0
16 x 20	8.9	11.9	14.9
18 x 20	4.7	6.3	7.9
18 x 24	15.6	20.8	26.0
20 x 24	10.9	14.6	18.2

DESIGN BASED ON USDA NRCS NEH PART 636 CHAPTER 52 STRUCTURAL DESIGN OF FLEXIBLE CONDUITS

REVISIONS:
DATE
DATE
DATE
DATE

RESOURCE ENGINEERING ASSOCIATES, INC.
Resource Engineering Associates, Inc.
3510 Parmenter St., Suite 100
Middleton, Wisconsin 53562-2507
Phone: 608-831-5522
Fax: 608-831-6564
Web: www.reaeng.com

THRUST BLOCK DETAIL
FACILITY SITE PLAN
GOLDEN SANDS DAIRY
8550 CENTRAL SANDS ROAD
BANCROFT, WI 54921

DATE: AUG 2013
DRAWN: EML
CHECKED: DRW
APPROVED: RJP
DRAWING NAME: 1232details6.dwg
PROJECT NUMBER: 120032.1

C403

N:\REA12\Wysocki120032_1\Civil\1232details6.dwg

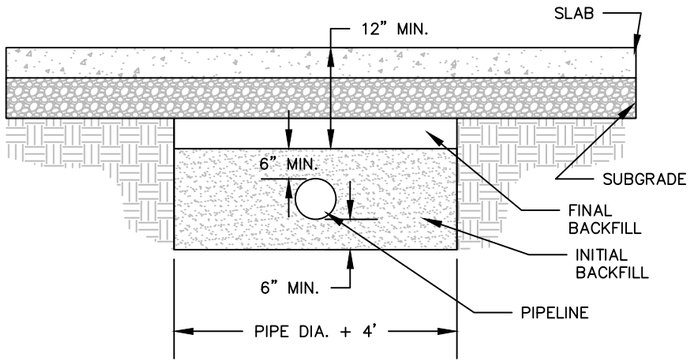

NOTES:
1. PRIOR TO COMPACTING THE BACKFILL AROUND THE PIPE, PRECAUTIONS SHOULD BE TAKEN TO WEIGHT THE PIPE TO PREVENT RAISING IT ABOVE THE DESIRED GRADE.
2. HAND COMPACTING OR MANUALLY DIRECTED POWER EQUIPMENT COMPACTION IS REQUIRED 2 FEET ABOVE THE CROWN OF THE PIPE.
3. INITIAL BACKFILL SHALL BE SOIL FREE OF STONES AND ROCKS GREATER THAN 1 INCH IN DIAMETER AND EARTH CLODS GREATER THAN 2 INCHES IN DIAMETER. FINAL BACKFILL SHALL BE FREE OF STONES AND ROCKS GREATER THAN 3 INCHES IN DIAMETER.
4. COMPACT FILL IN 4" LAYERS AT OPTIMUM MOISTURE CONTENT (OR SLIGHTLY HIGHER).
5. INSTALL 2.5 INCHES OF INSULATION FOR EVERY FOOT OF SOIL COVER LESS THAN 4 FEET. INSULATION MINIMUM 4 FEET WIDE.

1 / C404 PIPE BEDDING UNDER SLAB
NOT TO SCALE

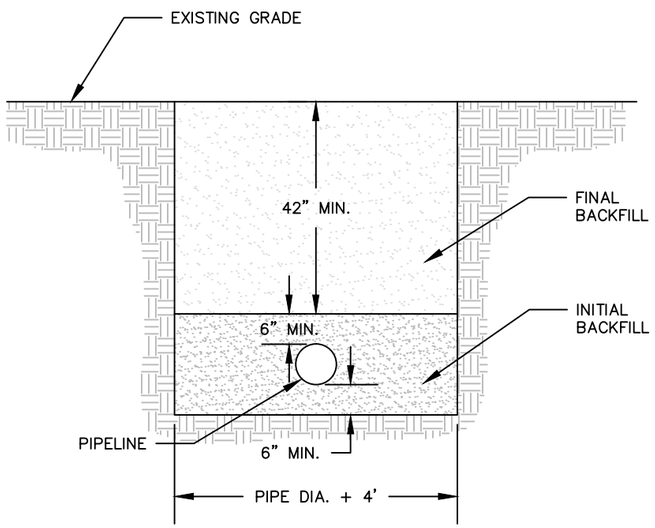

NOTES:
1. PRIOR TO COMPACTING THE BACKFILL AROUND THE PIPE, PRECAUTIONS SHOULD BE TAKEN TO WEIGHT THE PIPE TO PREVENT RAISING IT ABOVE THE DESIRED GRADE.
2. HAND COMPACTING OR MANUALLY DIRECTED POWER EQUIPMENT COMPACTION IS REQUIRED 2 FEET ABOVE THE CROWN OF THE PIPE.
3. INITIAL BACKFILL SHALL BE SOIL FREE OF STONES AND ROCKS GREATER THAN 1 INCH IN DIAMETER AND EARTH CLODS GREATER THAN 2 INCHES IN DIAMETER. FINAL BACKFILL SHALL BE FREE OF STONES AND ROCKS GREATER THAN 3 INCHES IN DIAMETER.
4. COMPACT FILL IN 4" LAYERS AT OPTIMUM MOISTURE CONTENT (OR SLIGHTLY HIGHER).

2 / C404 OPEN AREA PIPE BEDDING
NOT TO SCALE

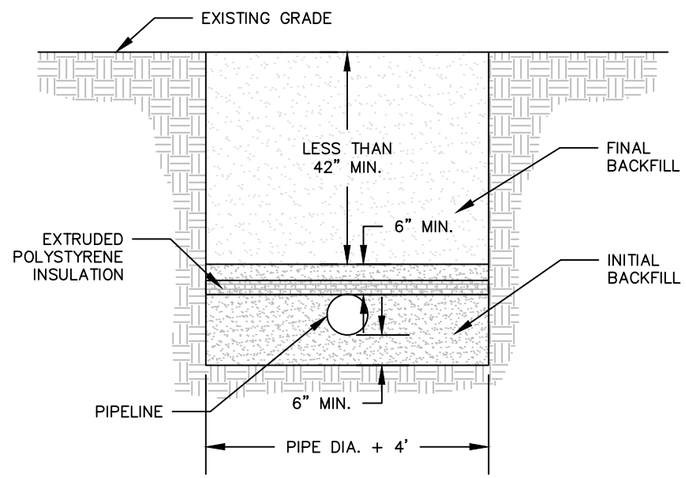

NOTES:
1. PRIOR TO COMPACTING THE BACKFILL AROUND THE PIPE, PRECAUTIONS SHOULD BE TAKEN TO WEIGHT THE PIPE TO PREVENT RAISING IT ABOVE THE DESIRED GRADE.
2. HAND COMPACTING OR MANUALLY DIRECTED POWER EQUIPMENT COMPACTION IS REQUIRED 2 FEET ABOVE THE CROWN OF THE PIPE.
3. INITIAL BACKFILL SHALL BE SOIL FREE OF STONES AND ROCKS GREATER THAN 1 INCH IN DIAMETER AND EARTH CLODS GREATER THAN 2 INCHES IN DIAMETER. FINAL BACKFILL SHALL BE FREE OF STONES AND ROCKS GREATER THAN 3 INCHES IN DIAMETER.
4. COMPACT FILL IN 4" LAYERS AT OPTIMUM MOISTURE CONTENT (OR SLIGHTLY HIGHER).
5. INSTALL 2.5 INCHES OF INSULATION FOR EVERY FOOT OF SOIL COVER LESS THAN 4 FEET. INSULATION MINIMUM 4 FEET WIDE.

3 / C404 INSULATED PIPE BEDDING
NOT TO SCALE

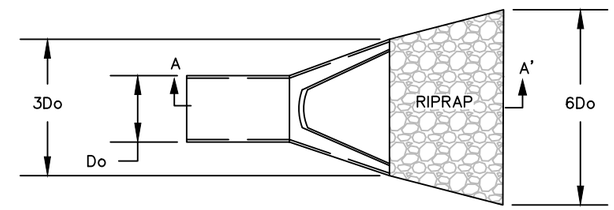

PLAN VIEW

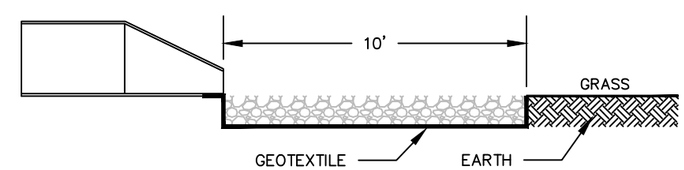

SECTION A–A'

MATERIAL NOTES
1. RIPRAP: Stone gradation shall be as shown in Table with d50=6". Stone used for riprap shall be clean, hard, durable, angular in shape.
2. GEOTEXTILE: The geotextile shall meet the requirements WI NRCS Construction Spec. 13, Table 2, Class 1, Non–Woven.

ROCK RIPRAP GRADATION

% PASSING BY WEIGHT	SIZE (IN)
100	12
60–85	9
25–50	6
5–20	3
0–5	1.2

4 / C404 CULVERT OUTLET
NOT TO SCALE

REVISIONS:
DATE
DATE
DATE
DATE

Resource Engineering Associates, Inc.
3510 Parmenter St., Suite 100
Middleton, Wisconsin 53562-2507
Phone: 608-831-5522
Fax: 608-831-6564
Web: www.reaeng.com
RESOURCE ENGINEERING ASSOCIATES, INC.

PIPE BEDDING DETAILS
FACILITY SITE PLAN
GOLDEN SANDS DAIRY
8550 CENTRAL SANDS ROAD
BANCROFT, WI 54921

DATE: AUG 2013
DRAWN: EML
CHECKED: DRW
APPROVED: RJP
DRAWING NAME: 1232details6.dwg
PROJECT NUMBER: 120032.1

N:\REA12\Wysocki120032_1\Civil\1232details6.dwg

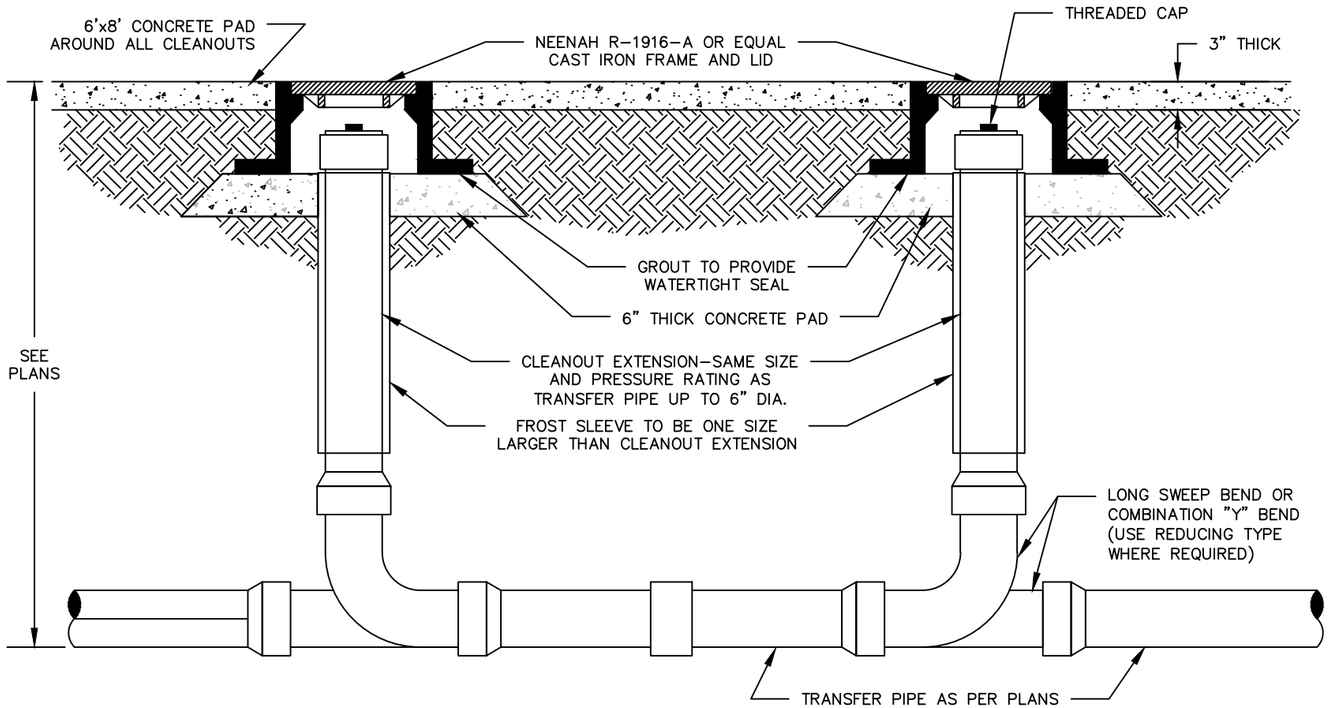

NOTE: THRUST BLOCKS AT ALL BENDS AND VALVES

1 / C405 DOUBLE CLEANOUT DETAIL
NOT TO SCALE

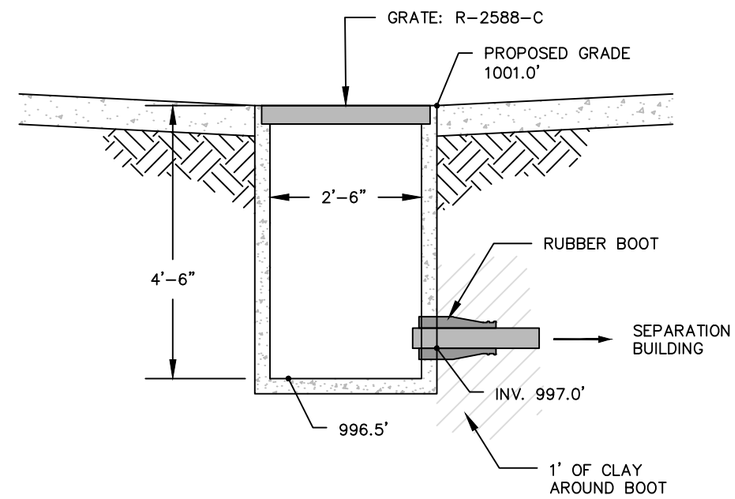

2 / C405 GRAVITY MANHOLE
NOT TO SCALE

REVISIONS:
DATE
DATE
DATE
DATE

RESOURCE ENGINEERING ASSOCIATES, INC.
Resource Engineering Associates, Inc.
3510 Parmenter St., Suite 100
Middleton, Wisconsin 53562-2507
Phone: 608-831-5522
Fax: 608-831-6564
Web: www.reaeng.com

CLEANOUT DETAIL
FACILITY SITE PLAN
GOLDEN SANDS DAIRY
8550 CENTRAL SANDS ROAD
BANCROFT, WI 54921

DATE: AUG 2013
DRAWN: EML
CHECKED: DRW
APPROVED: RJP
DRAWING NAME: 1232details6.dwg
PROJECT NUMBER: 120032.1

C405

N:\REA12\Wysocki120032_1\Civil\1232details6.dwg

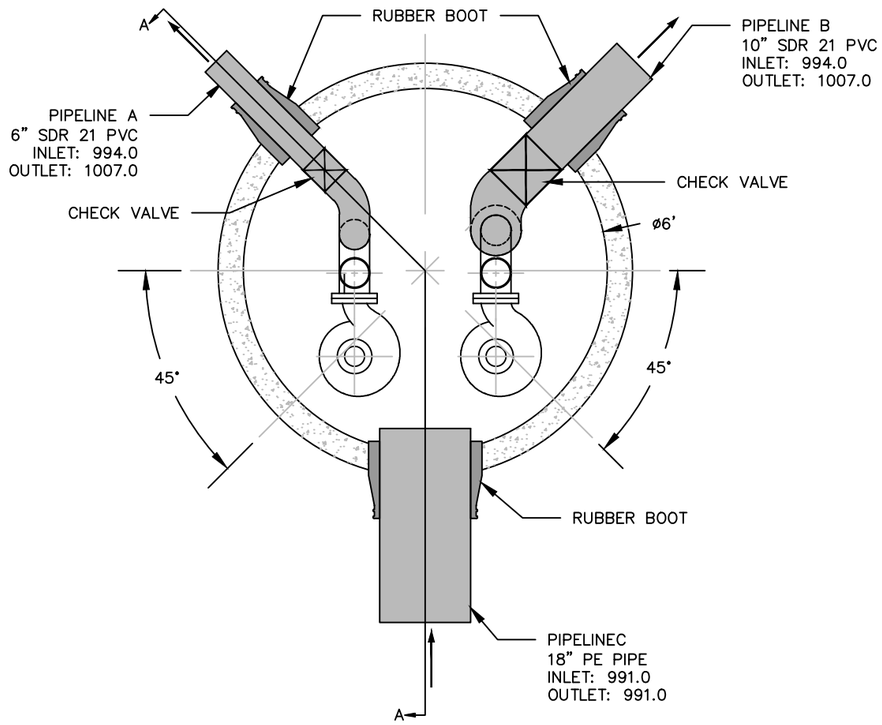

PLAN VEIW

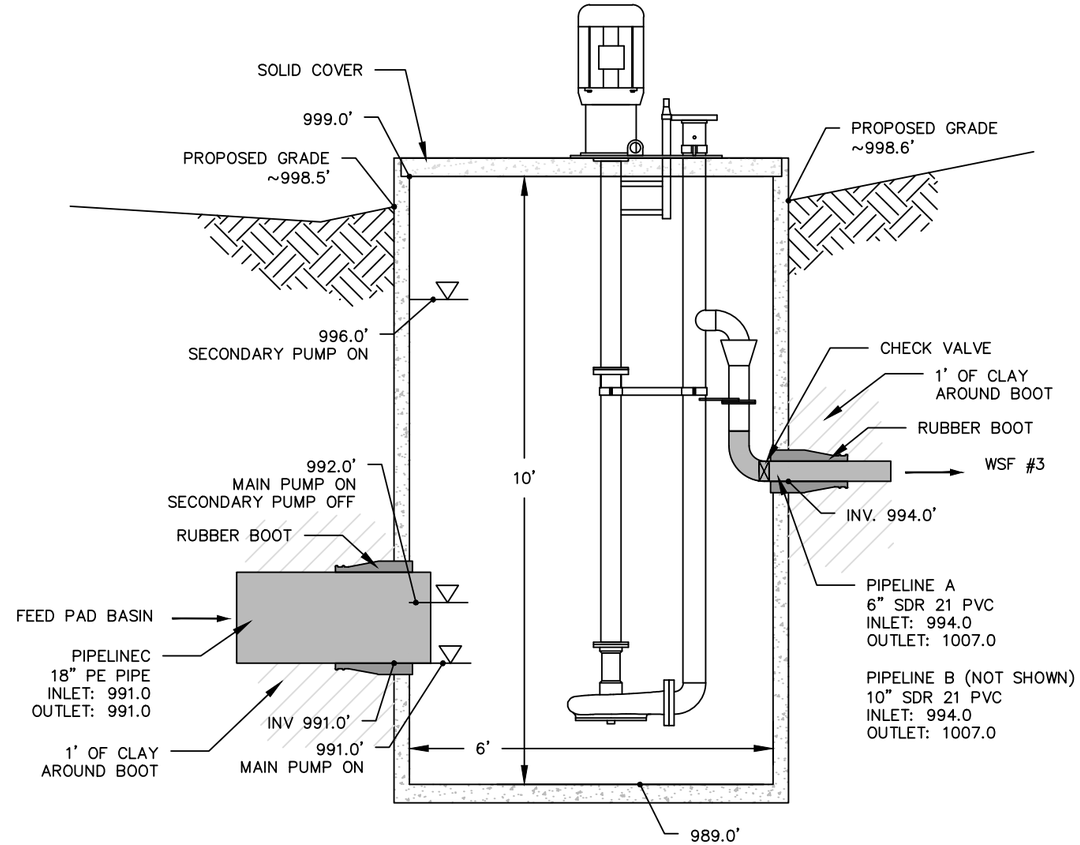

SECTION A–A

MAIN PUMP: VAUGHAN V4P–1170 OR APPROVED EQUIVALENT

- GPM: 500 GPM
- HP: 10 HP @ 1,170 RPM
- TDH: 31.9 FT
- DISCHARGE PIPE: 6" SDR 21 (PIPELINE A)

SECONDARY PUMP: VAUGHAN E8K–1170 OR APPROVED EQUIVALENT

- GPM: 2,000 GPM
- HP: 25 HP @ 1,170 RPM
- TDH: 32.9 FT
- DISCHARGE PIPE: 10" SDR 21 (PIPELINE B)

CONTROL PANEL LOCATED NEAR MANHOLE. CONTROLS TO HAVE AUTOMATIC 'ON' SWITCH AND AUTOMATIC 'OFF' SWITCH.

PUMP NOTES:

1. SIGNS SHOULD BE POSTED ON ALL RECEPTION TANK AND PUMP STATION LIDS STATING "DANGER, CONFINED SPACE. DO NOT ENTER."
2. ELECTRICAL SERVICE TO COMPLY WITH LOCAL ELECTRICAL CODE FOR OUTDOOR INSTALLATION (TO BE AT THE DISCRETION OF THE LANDOWNER).
3. PUMPS SHALL BE THOSE LISTED OR ENGINEER APPROVED EQUIVALENT. PUMP SUPPLIER(S) TO CONFIRM THAT PUMP WILL SUPPLY SPECIFIED GPM.
4. PUMP STATION LEVEL CONTROLS TO BE CONFIRMED BY PUMP SUPPLIER – SUPPLIER TO PROVIDE SHOP DRAWINGS.
5. ALL PUMPS SHALL HAVE MANUAL OVER–RIDE AND LOCK–OUT CONTROLS.
6. TO ALLOW FOR EASY MAINTENANCE WITHOUT ENTRY INTO THE MANHOLE/TANK PUMP SHOULD BE ON RAIL AND/OR QUICK CONNECT – SUPPLIER TO PROVIDE SHOP DRAWINGS.

MANHOLE NOTES:

1. THE MANHOLE MUST HAVE A COVER.
2. THE MANHOLE IS A CONFINED SPACE. FOLLOW ASAE EP470, MANURE STORAGE SAFETY, FOR ANY PLANNED ENTRY.
3. IN LIEU OF A CHAIN, PLACE THE PUMP ON A RAIL TO ALLOW FOR EASY MAINTENANCE WITHOUT ENTRY INTO THE MANHOLE.
4. THE MANHOLE SHALL CONFORM TO CRITERIA IN ASTM C–478, PRECAST REINFORCED CONCRETE MANHOLE SECTIONS.
5. PLACE RIGID STYROFOAM INSULATION, 4 FEET WIDE, OVER THE PIPE WHEREVER THERE IS LESS THAN 4' OF COVER. 2.5–INCHES OF STYROFOAM REPLACES APPROXIMATELY ONE FOOT OF SOIL.
6. APPLY EXPANDING SEALANT OR NON–SHRINK GROUT AT PIPE OPENINGS.
7. A RUBBER BOOT CONNECTOR, A–LOK, PRESS SEAL, OR EQUIVALENT. NOTE: GROUTING NOT ACCEPTABLE.
8. A PRECAST RISER SECTION WITH INTEGRAL BASE IS AN ACCEPTABLE ALTERNATIVE.
9. MANHOLE INLET AND PUMP DETAILS MAY VARY, DEPENDING ON THE MANUFACTURER YOU SELECT.

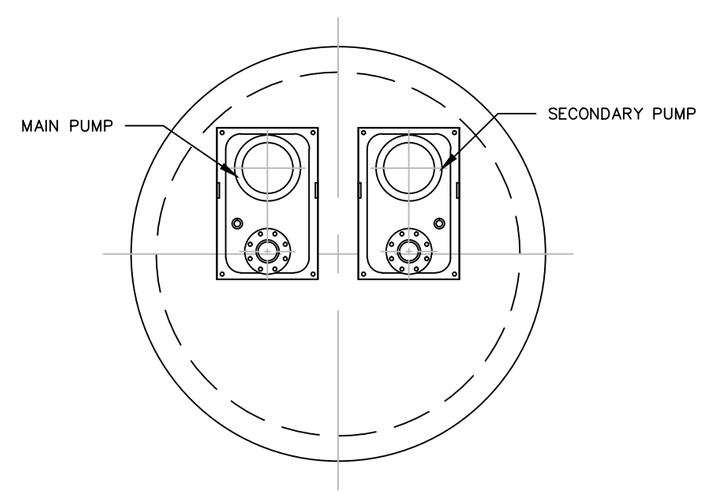

TOP VEIW

1 / C406 FEED PAD PUMP STATION
NOT TO SCALE

REVISIONS:
DATE
DATE
DATE
DATE

Resource Engineering Associates, Inc.
3510 Parmenter St., Suite 100
Middleton, Wisconsin 53562-2507
Phone: 608-831-5522
Fax: 608-831-6564
Web: www.reaeng.com
RESOURCE ENGINEERING ASSOCIATES, INC.

PUMP DETAILS
FACILITY SITE PLAN
GOLDEN SANDS DAIRY
8550 CENTRAL SANDS ROAD
BANCROFT, WI 54921

DATE: JAN 2014
DRAWN: EML
CHECKED: DRW
APPROVED: RJP
DRAWING NAME: 1232details6.dwg
PROJECT NUMBER: 120032.1

C406

N:\REA12\Wysocki120032_1\Civil\1232details6.dwg

NOTE: ALL PIPE PENETRATIONS MADE WATERTIGHT WITH LINKSEAL

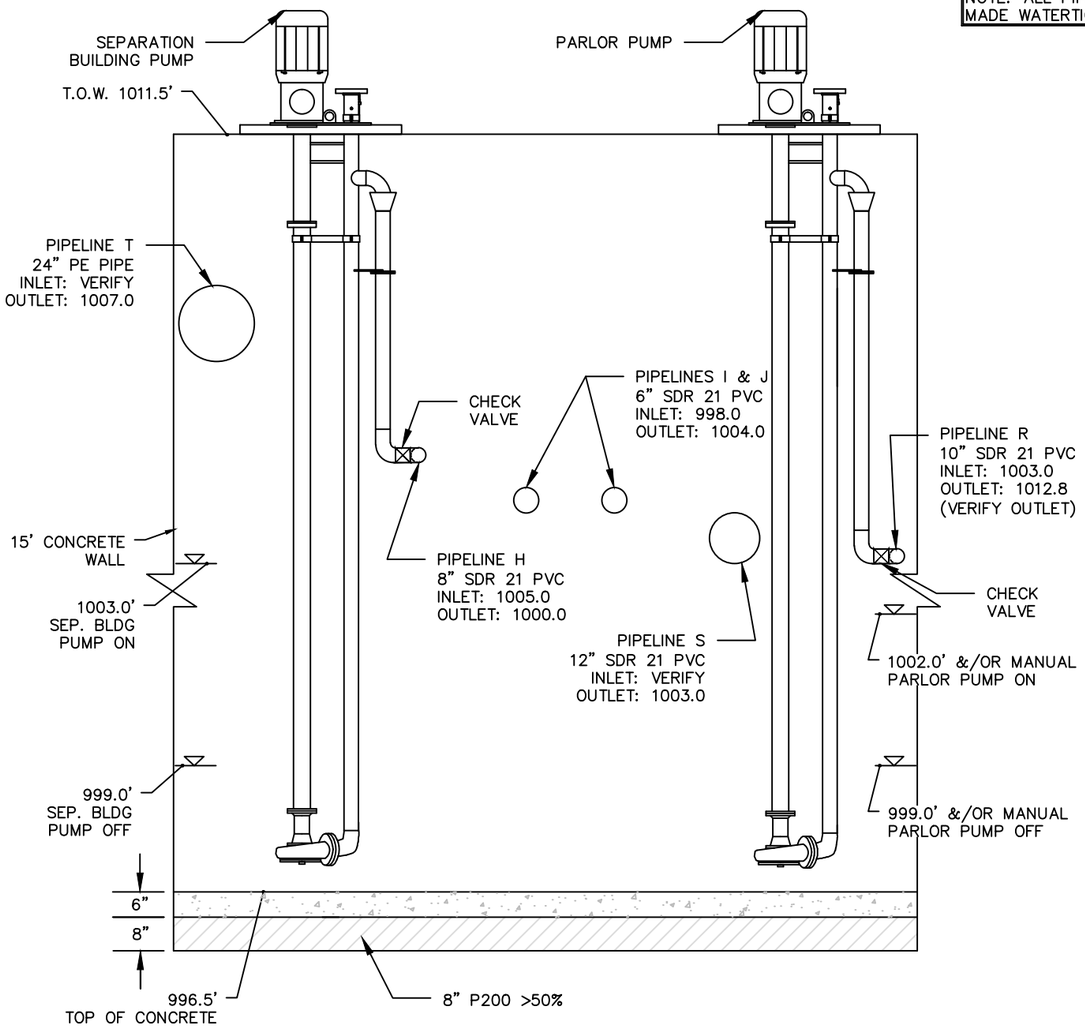

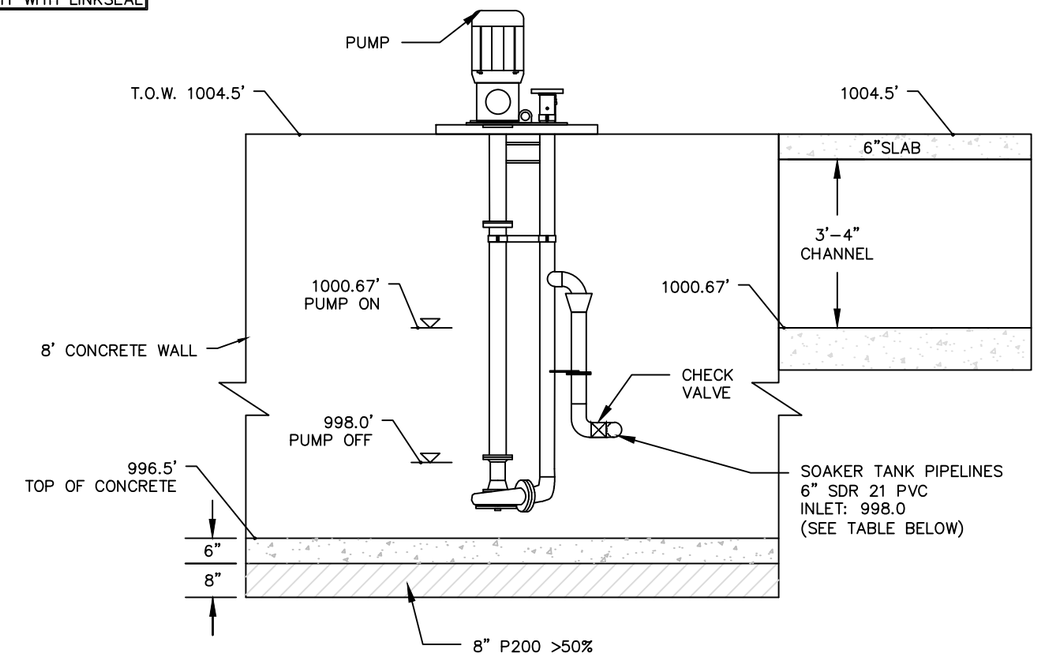

SOAKER TANKS & PUMPS								
TANK	PUMP (1)	GPM	HP	RPM	TDH	DISCHARGE PIPE	INLET ELEV	OUTLET ELEV
SW	V4K	300	5	1,170	11.4	6" (PIPELINE E)	998.0	1000.0
W	E4K	300	5	1,170	8.7	6" (PIPELINE F)	998.0	1000.0
NW	V4K	300	5	1,170	6.7	6" (PIPELINE G)	998.0	1000.0
SE	V4K	300	5	1,170	13.8	6" (PIPELINE I)	998.0	1004.0
E	V4K	300	5	1,170	15.0	6" (PIPELINE J)	998.0	1004.0
NE	V4K	300	5	1,170	17.6	6" (PIPELINE K)	998.0	1000.0

(1) PUMPS AR VAUGHAN.

SEPARATION BUILDING PUMP: VAUGHAN V6U-1170 PUMP OR APPROVED EQUIVALENT.

- GPM: 800 GPM
- HP: 10 HP @ 1,170 RPM
- TDH: 24.2 FT
- DISCHARGE PIPE: 8" SDR 21 (PIPELINE H)

PARLOR PUMP: VAUGHAN V8N2-1170 PUMP OR APPROVED EQUIVALENT.

- GPM: 2500 GPM
- HP: 40 HP @ 1,170 RPM
- TDH: 34.2 FT
- DISCHARGE PIPE: 10" SDR 21 (PIPELINE R)

CONTROL PANEL LOCATED NEAR MANHOLE. CONTROLS TO HAVE AUTOMATIC 'ON' SWITCH AND AUTOMATIC 'OFF' SWITCH.

PUMP NOTES:

1. SIGNS SHOULD BE POSTED ON ALL RECEPTION TANK AND PUMP STATION LIDS STATING "DANGER, CONFINED SPACE. DO NOT ENTER."
2. ELECTRICAL SERVICE TO COMPLY WITH LOCAL ELECTRICAL CODE FOR OUTDOOR INSTALLATION (TO BE AT THE DISCRETION OF THE LANDOWNER).
3. PUMPS SHALL BE THOSE LISTED OR ENGINEER AND CLIENT APPROVED EQUIVALENT. PUMP SUPPLIER(S) TO CONFIRM THAT PUMP WILL SUPPLY SPECIFIED GPM.
4. PUMP STATION LEVEL CONTROLS TO BE CONFIRMED BY PUMP SUPPLIER – SUPPLIER TO PROVIDE SHOP DRAWINGS.
5. ALL PUMPS SHALL HAVE MANUAL OVER-RIDE AND LOCK-OUT CONTROLS.
6. TO ALLOW FOR EASY MAINTENANCE WITHOUT ENTRY INTO THE MANHOLE/TANK PUMP SHOULD BE ON RAIL AND/OR QUICK CONNECT – SUPPLIER TO PROVIDE SHOP DRAWINGS.

1 / C407 HOLDING AREA TANK PUMPS
NOT TO SCALE

CONTROL PANEL LOCATED NEAR MANHOLE. CONTROLS TO HAVE AUTOMATIC 'ON' SWITCH AND AUTOMATIC 'OFF' SWITCH.

PUMP NOTES:

1. SIGNS SHOULD BE POSTED ON ALL RECEPTION TANK AND PUMP STATION LIDS STATING "DANGER, CONFINED SPACE. DO NOT ENTER."
2. ELECTRICAL SERVICE TO COMPLY WITH LOCAL ELECTRICAL CODE FOR OUTDOOR INSTALLATION (TO BE AT THE DISCRETION OF THE LANDOWNER).
3. PUMPS SHALL BE THOSE LISTED OR ENGINEER AND CLIENT APPROVED EQUIVALENT. PUMP SUPPLIER(S) TO CONFIRM THAT PUMP WILL SUPPLY SPECIFIED GPM.
4. PUMP STATION LEVEL CONTROLS TO BE CONFIRMED BY PUMP SUPPLIER – SUPPLIER TO PROVIDE SHOP DRAWINGS.
5. ALL PUMPS SHALL HAVE MANUAL OVER-RIDE AND LOCK-OUT CONTROLS.
6. TO ALLOW FOR EASY MAINTENANCE WITHOUT ENTRY INTO THE MANHOLE/TANK PUMP SHOULD BE ON RAIL AND/OR QUICK CONNECT – SUPPLIER TO PROVIDE SHOP DRAWINGS.
7. PUMP AND PIPE PENETRATION TO BE COORDINATED WITH OWNER – PROVIDE SHOP DRAWINGS.

2 / C407 SOAKER WATER TANK PUMPS
NOT TO SCALE

REVISIONS:
DATE
DATE
DATE
DATE

RESOURCE ENGINEERING ASSOCIATES, INC.
Resource Engineering Associates, Inc.
3510 Parmenter St., Suite 100
Middleton, Wisconsin 53562-2507
Phone: 608-831-5522
Fax: 608-831-6564
Web: www.reaeng.com

PUMP DETAILS
FACILITY SITE PLAN
GOLDEN SANDS DAIRY
8550 CENTRAL SANDS ROAD
BANCROFT, WI 54921

DATE: AUG 2013
DRAWN: EML
CHECKED: DRW
APPROVED: RJP
DRAWING NAME: 1232details6.dwg
PROJECT NUMBER: 120032.1

C407

N:\REA12\Wysocki120032_1\Civil\1232details6.dwg

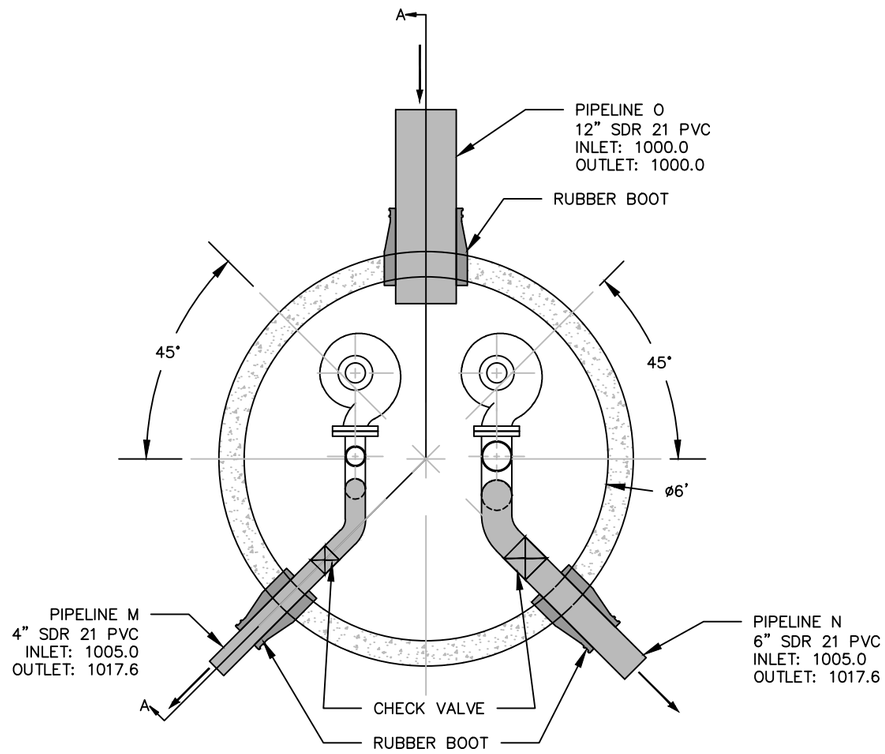

PLAN VEIW

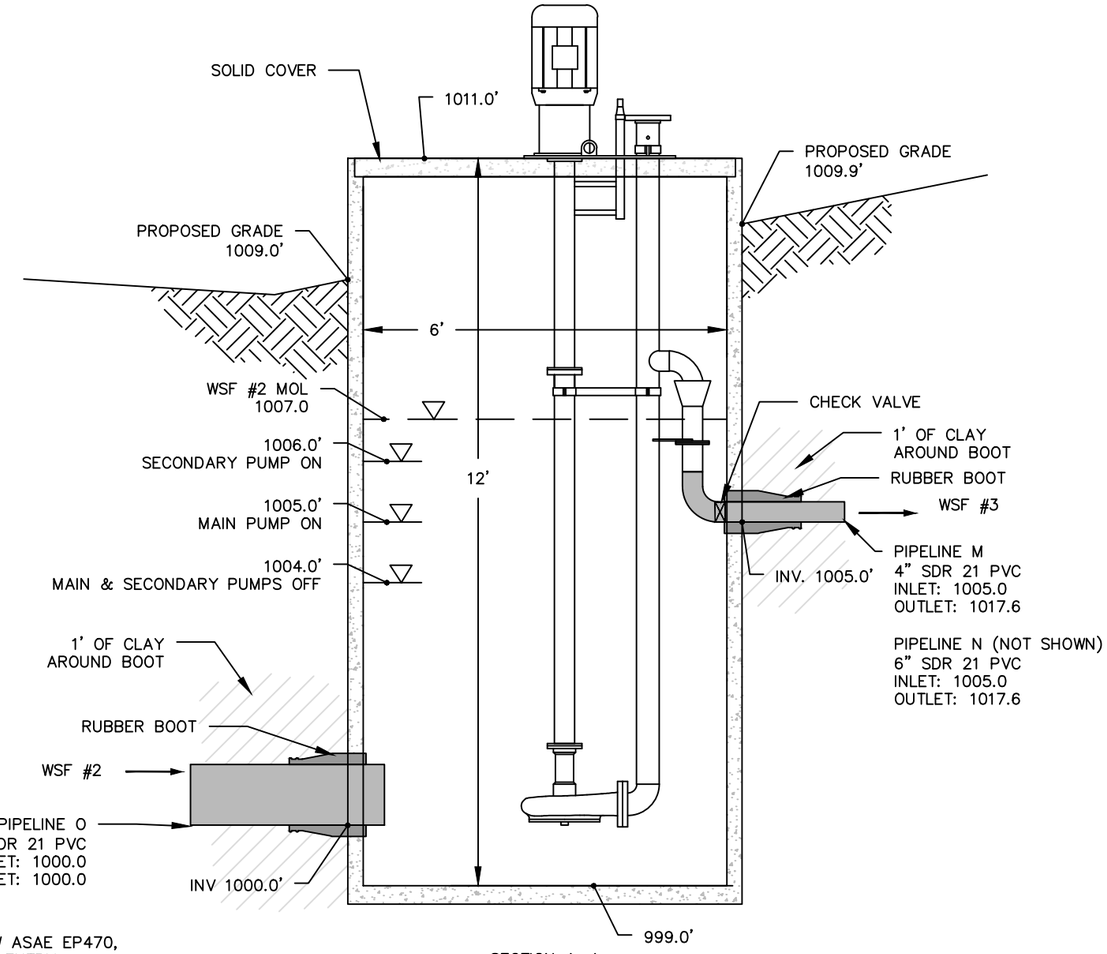

SECTION A–A

MAIN PUMP: VAUGHAN V4K–1170 OR APPROVED EQUIVALENT

- GPM: 100 GPM
- HP: 5 HP @ 1,170 RPM
- TDH: 14.8 FT
- DISCHARGE PIPE: 4" SDR 21 (PIPELINE M)

SECONDARY PUMP: VAUGHAN V4P–1170 OR APPROVED EQUIVALENT

- GPM: 500 GPM
- HP: 7.5 HP @ 1,170 RPM
- TDH: 23.4 FT
- DISCHARGE PIPE: 6" SDR 21 (PIPELINE N)

CONTROL PANEL LOCATED NEAR MANHOLE. CONTROLS TO HAVE AUTOMATIC 'ON' SWITCH AND AUTOMATIC 'OFF' SWITCH.

PUMP NOTES:

1. SIGNS SHOULD BE POSTED ON ALL RECEPTION TANK AND PUMP STATION LIDS STATING "DANGER, CONFINED SPACE. DO NOT ENTER."
2. ELECTRICAL SERVICE TO COMPLY WITH LOCAL ELECTRICAL CODE FOR OUTDOOR INSTALLATION (TO BE AT THE DISCRETION OF THE LANDOWNER).
3. PUMPS SHALL BE THOSE LISTED OR ENGINEER APPROVED EQUIVALENT. PUMP SUPPLIER(S) TO CONFIRM THAT PUMP WILL SUPPLY SPECIFIED GPM.
4. PUMP STATION LEVEL CONTROLS TO BE CONFIRMED BY PUMP SUPPLIER – SUPPLIER TO PROVIDE SHOP DRAWINGS.
5. ALL PUMPS SHALL HAVE MANUAL OVER–RIDE AND LOCK–OUT CONTROLS.
6. TO ALLOW FOR EASY MAINTENANCE WITHOUT ENTRY INTO THE MANHOLE/TANK PUMP SHOULD BE ON RAIL AND/OR QUICK CONNECT – SUPPLIER TO PROVIDE SHOP DRAWINGS.

MANHOLE NOTES:

1. THE MANHOLE MUST HAVE A COVER.
2. THE MANHOLE IS A CONFINED SPACE. FOLLOW ASAE EP470, MANURE STORAGE SAFETY, FOR ANY PLANNED ENTRY.
3. IN LIEU OF A CHAIN, PLACE THE PUMP ON A RAIL TO ALLOW FOR EASY MAINTENANCE WITHOUT ENTRY INTO THE MANHOLE.
4. THE MANHOLE SHALL CONFORM TO CRITERIA IN ASTM C–478, PRECAST REINFORCED CONCRETE MANHOLE SECTIONS.
5. PLACE RIGID STYROFOAM INSULATION, 4 FEET WIDE, OVER THE PIPE WHEREVER THERE IS LESS THAN 4' OF COVER. 2.5–INCHES OF STYROFOAM REPLACES APPROXIMATELY ONE FOOT OF SOIL.
6. APPLY EXPANDING SEALANT OR NON–SHRINK GROUT AT PIPE OPENINGS.
7. A RUBBER BOOT CONNECTOR, A–LOK, PRESS SEAL, OR EQUIVALENT. NOTE: GROUTING NOT ACCEPTABLE.
8. A PRECAST RISER SECTION WITH INTEGRAL BASE IS AN ACCEPTABLE ALTERNATIVE.
9. MANHOLE INLET AND PUMP DETAILS MAY VARY, DEPENDING ON THE MANUFACTURER YOU SELECT.

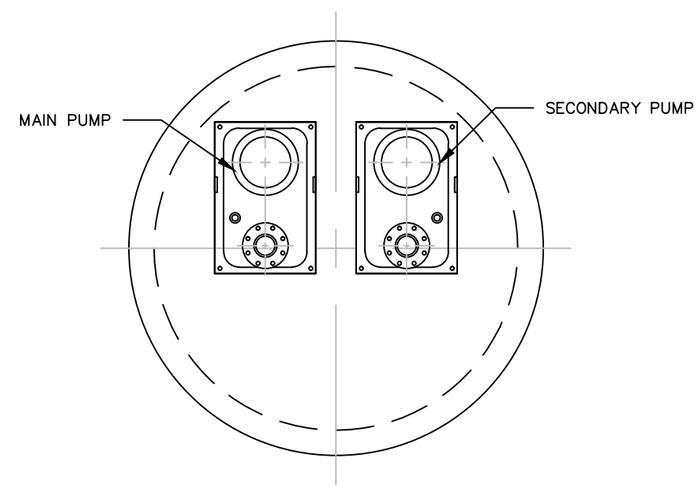

TOP VEIW

1 / C408 PUMP STATION
NOT TO SCALE

REVISIONS:
DATE
DATE
DATE
DATE

RESOURCE ENGINEERING ASSOCIATES, INC.
Resource Engineering Associates, Inc.
3510 Parmenter St., Suite 100
Middleton, Wisconsin 53562-2507
Phone: 608-831-5522
Fax: 608-831-6564
Web: www.reaeng.com

PUMP DETAILS
FACILITY SITE PLAN
GOLDEN SANDS DAIRY
8550 CENTRAL SANDS ROAD
BANCROFT, WI 54921

DATE: AUG 2013
DRAWN: EML
CHECKED: DRW
APPROVED: RJP
DRAWING NAME: 1232details6.dwg
PROJECT NUMBER: 120032.1

C408

N:\REA12\Wysocki120032_1\Civil\1232details6.dwg

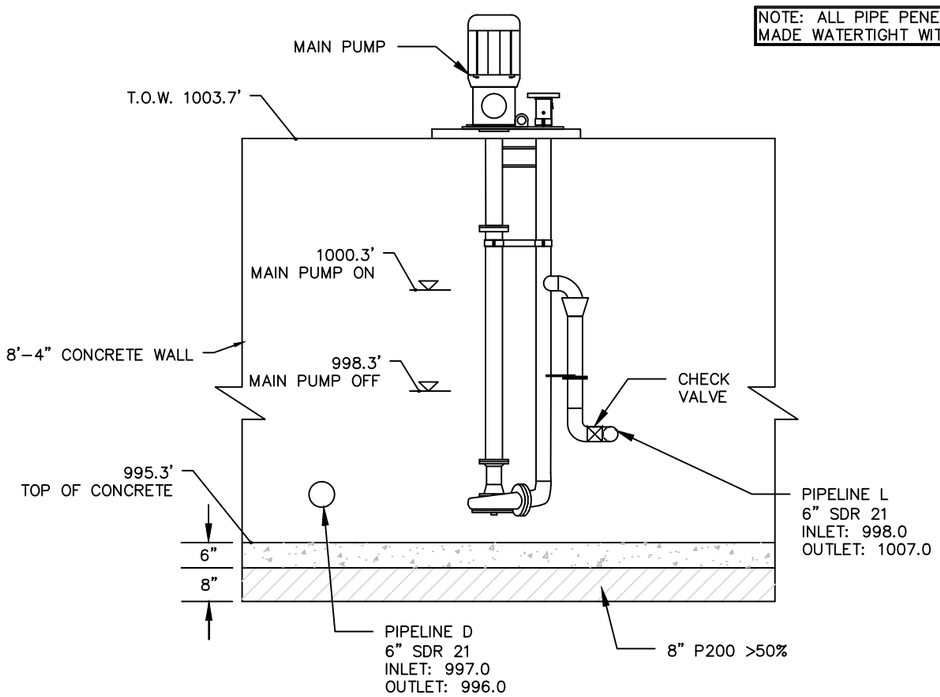

MAIN PUMP: VAUGHAN V4K-1170 PUMP OR APPROVED EQUIVALENT.

- GPM: 300 GPM
- HP: 5 HP @ 1,170 RPM
- TDH: 18.5 FT
- DISCHARGE PIPE: 6" SDR 21 (PIPELINE L)

CONTROL PANEL LOCATED NEAR MANHOLE. CONTROLS TO HAVE AUTOMATIC 'ON' SWITCH AND AUTOMATIC 'OFF' SWITCH.

PUMP NOTES:

1. SIGNS SHOULD BE POSTED ON ALL RECEPTION TANK AND PUMP STATION LIDS STATING "DANGER, CONFINED SPACE. DO NOT ENTER."
2. ELECTRICAL SERVICE TO COMPLY WITH LOCAL ELECTRICAL CODE FOR OUTDOOR INSTALLATION (TO BE AT THE DISCRETION OF THE LANDOWNER).
3. PUMPS SHALL BE THOSE LISTED OR ENGINEER APPROVED EQUIVALENT. PUMP SUPPLIER(S) TO CONFIRM THAT PUMP WILL SUPPLY SPECIFIED GPM.
4. PUMP STATION LEVEL CONTROLS TO BE CONFIRMED BY PUMP SUPPLIER – SUPPLIER TO PROVIDE SHOP DRAWINGS.
5. ALL PUMPS SHALL HAVE MANUAL OVER-RIDE AND LOCK-OUT CONTROLS.
6. TO ALLOW FOR EASY MAINTENANCE WITHOUT ENTRY INTO THE MANHOLE/TANK PUMP SHOULD BE ON RAIL AND/OR QUICK CONNECT – SUPPLIER TO PROVIDE SHOP DRAWINGS.
7. PUMP AND PIPE PENETRATION TO BE COORDINATED WITH OWNER – PROVIDE SHOP DRAWINGS.

1 / C409 SEPARATION BLDG PUMP
NOT TO SCALE

N:\REA12\Wysocki120032_1\Civil\1232details6.dwg

REVISIONS:
DATE
DATE
DATE
DATE

RESOURCE ENGINEERING ASSOCIATES, INC.
Resource Engineering Associates, Inc.
3510 Parmenter St., Suite 100
Middleton, Wisconsin 53562-2507
Phone: 608-831-5522
Fax: 608-831-6564
Web: www.reaeng.com

PUMP DETAILS
FACILITY SITE PLAN
GOLDEN SANDS DAIRY
8550 CENTRAL SANDS ROAD
BANCROFT, WI 54921

DATE: JAN 2014
DRAWN: EML
CHECKED: DRW
APPROVED: RJP
DRAWING NAME: 1232details6.dwg
PROJECT NUMBER: 120032.1

C409

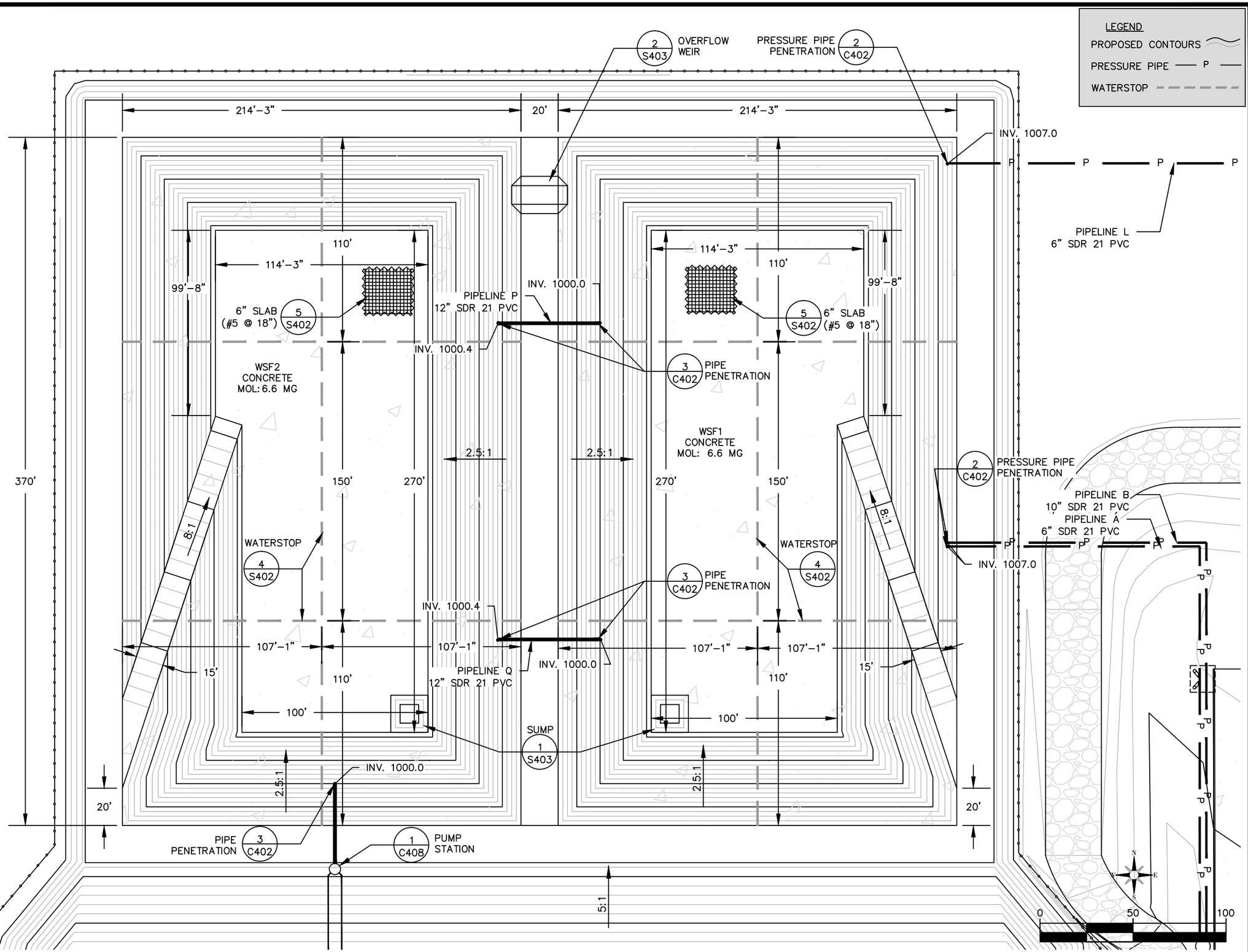

REVISIONS:
DATE
DATE
DATE
DATE

Resource Engineering Associates, Inc.
3510 Parmenter St., Suite 100
Middleton, Wisconsin 53562-2507
Phone: 608-831-5522
Fax: 608-831-6564
Web: www.reaeng.com

RESOURCE ENGINEERING ASSOCIATES, INC.

WSF #1 & #2 LAYOUT
FACILITY SITE PLAN
GOLDEN SANDS DAIRY
8550 CENTRAL SANDS ROAD
BANCROFT, WI 54921

DATE: AUG 2013
DRAWN: EML
CHECKED: DRW
APPROVED: RJP
DRAWING NAME: 1232site6.1.dwg
PROJECT NUMBER: 120032.1

S100

N:\REA12\Wysocki120032_1\Civil\1232site6.1.dwg

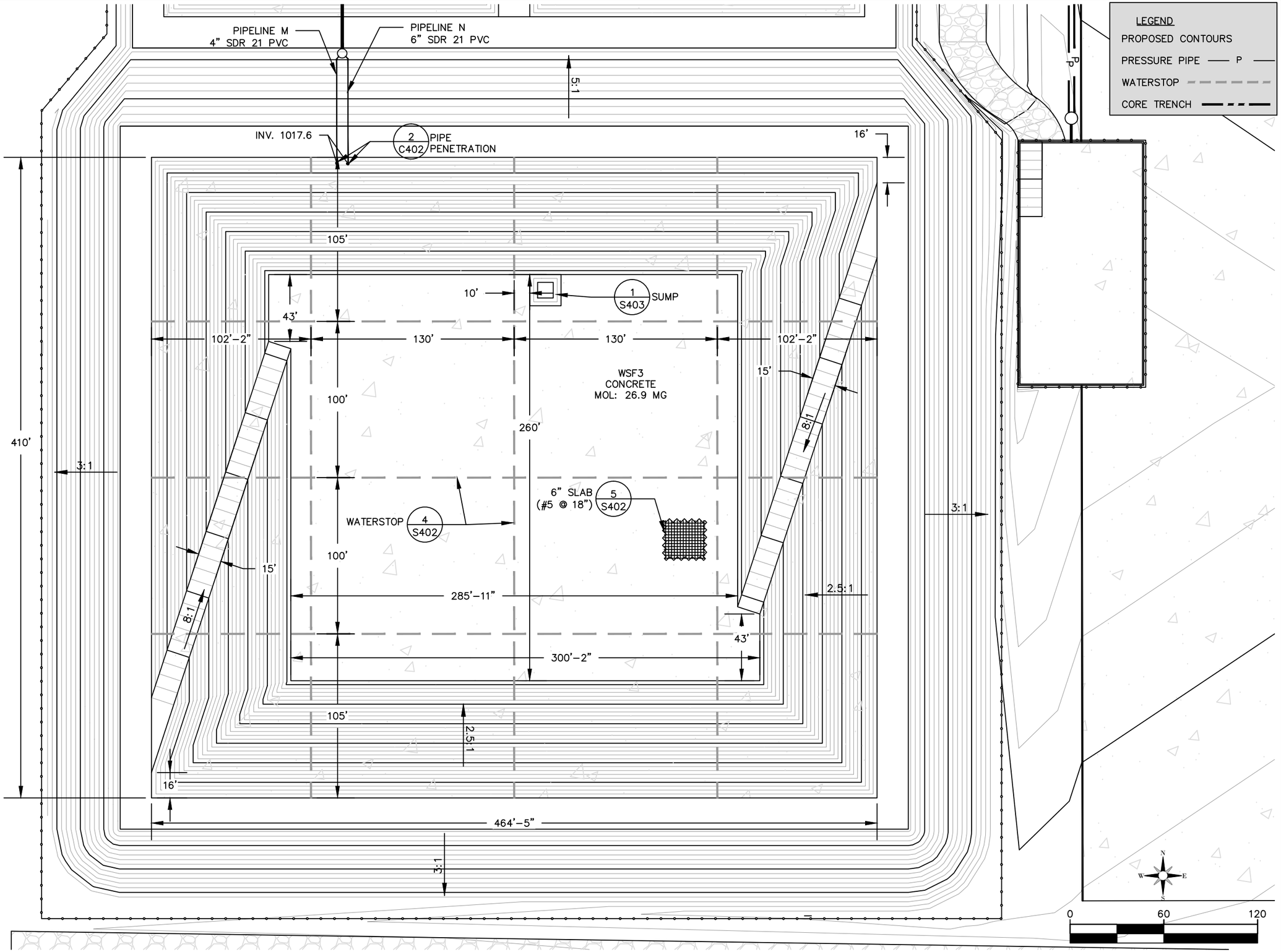

REVISIONS:
DATE
DATE
DATE
DATE

RESOURCE ENGINEERING ASSOCIATES, INC.
Resource Engineering Associates, Inc.
3510 Parmenter St., Suite 100
Middleton, Wisconsin 53562-2507
Phone: 608-831-5522
Fax: 608-831-6564
Web: www.reaeng.com

WSF #3 LAYOUT
FACILITY SITE PLAN
GOLDEN SANDS DAIRY
8550 CENTRAL SANDS ROAD
BANCROFT, WI 54921

DATE: AUG 2013
DRAWN: EML
CHECKED: DRW
APPROVED: RJP
DRAWING NAME: 1232site6.1.dwg
PROJECT NUMBER: 120032.1

S101

N:\REA12\Wysocki120032_1\Civil\1232site6.1.dwg

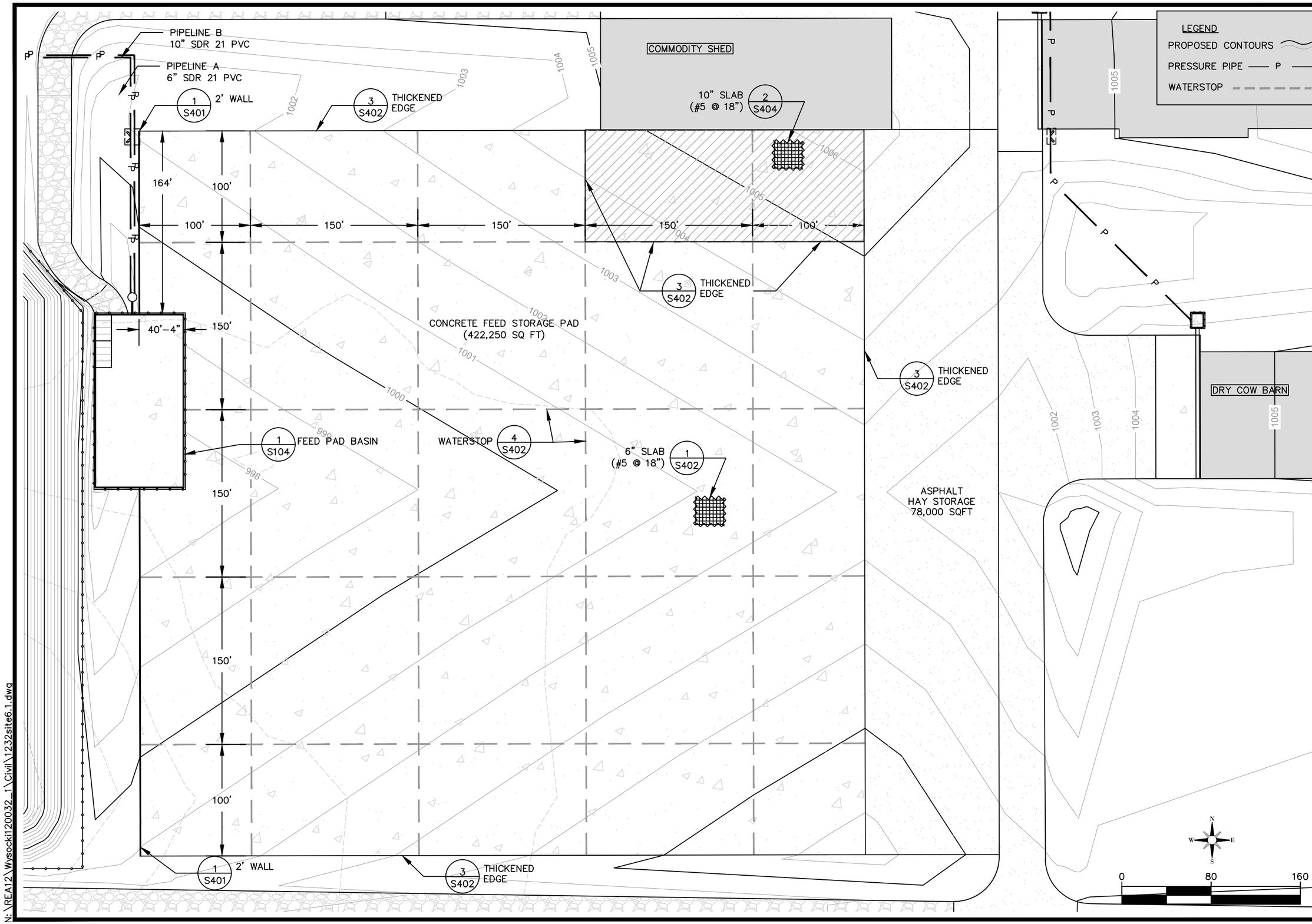

REVISIONS:
DATE
DATE
DATE
DATE

RESOURCE ENGINEERING ASSOCIATES, INC.
Resource Engineering Associates, Inc.
3510 Parmenter St., Suite 100
Middleton, Wisconsin 53562-2507
Phone: 608-831-5522
Fax: 608-831-6564
Web: www.reaeng.com

FEED STORAGE PAD LAYOUT
FACILITY SITE PLAN
GOLDEN SANDS DAIRY
8550 CENTRAL SANDS ROAD
BANCROFT, WI 54921

DATE: AUG 2013
DRAWN: EML
CHECKED: DRW
APPROVED: RJP
DRAWING NAME: 1232site6.1.dwg
PROJECT NUMBER: 120032.1

S102

N:\REA12\Wysocki120032_1\Civil\1232site6.1.dwg

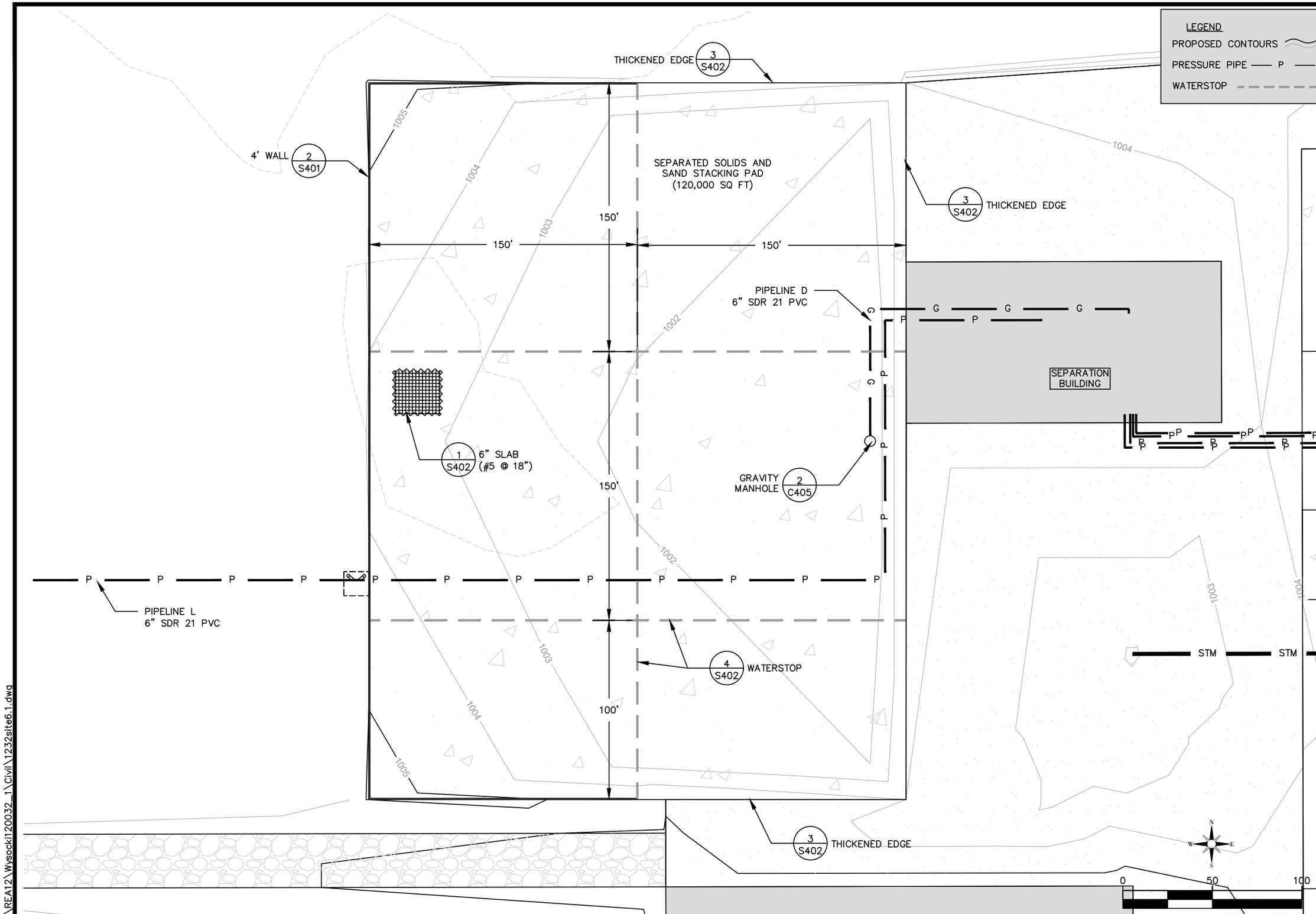

REVISIONS:
DATE
DATE
DATE
DATE

Resource Engineering Associates, Inc.
3510 Parmenter St., Suite 100
Middleton, Wisconsin 53562-2507
Phone: 608-831-5522
Fax: 608-831-6564
Web: www.reaeng.com

RESOURCE ENGINEERING ASSOCIATES, INC.

SOLIDS STACKING PAD LAYOUT
FACILITY SITE PLAN
GOLDEN SANDS DAIRY
8550 CENTRAL SANDS ROAD
BANCROFT, WI 54921

DATE: AUG 2013
DRAWN: EML
CHECKED: DRW
APPROVED: RJP
DRAWING NAME: 1232site6.1.dwg
PROJECT NUMBER: 120032.1

S103

N:\REA12\Wysocki120032_1\Civil\1232site6.1.dwg

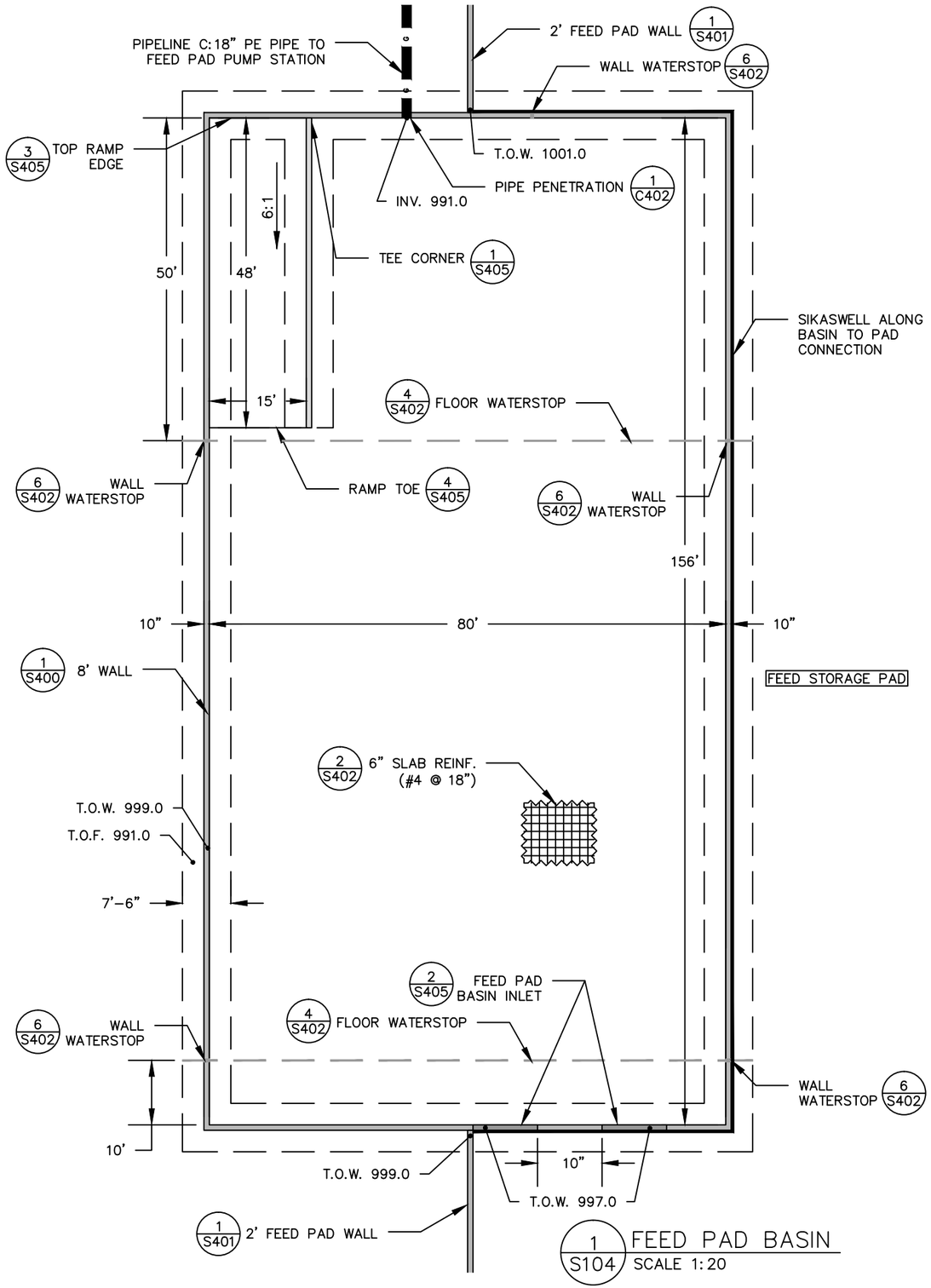

1/S104 FEED PAD BASIN
SCALE 1:20

N:\REA12\Wysocki120032_1\Civil\1232structural6.1.dwg

REVISIONS:
DATE
DATE
DATE
DATE

RESOURCE ENGINEERING ASSOCIATES, INC.
Resource Engineering Associates, Inc.
3510 Parmenter St., Suite 100
Middleton, Wisconsin 53562-2507
Phone: 608-831-5522
Fax: 608-831-6564
Web: www.reaeng.com

SMALL BASIN LAYOUT
FACILITY SITE PLAN
GOLDEN SANDS DAIRY
8550 CENTRAL SANDS ROAD
BANCROFT, WI 54921

DATE: AUG 2013
DRAWN: EML
CHECKED: DRW
APPROVED: RJP
DRAWING NAME: 1232structural6.1.dwg
PROJECT NUMBER: 120032.1

S104

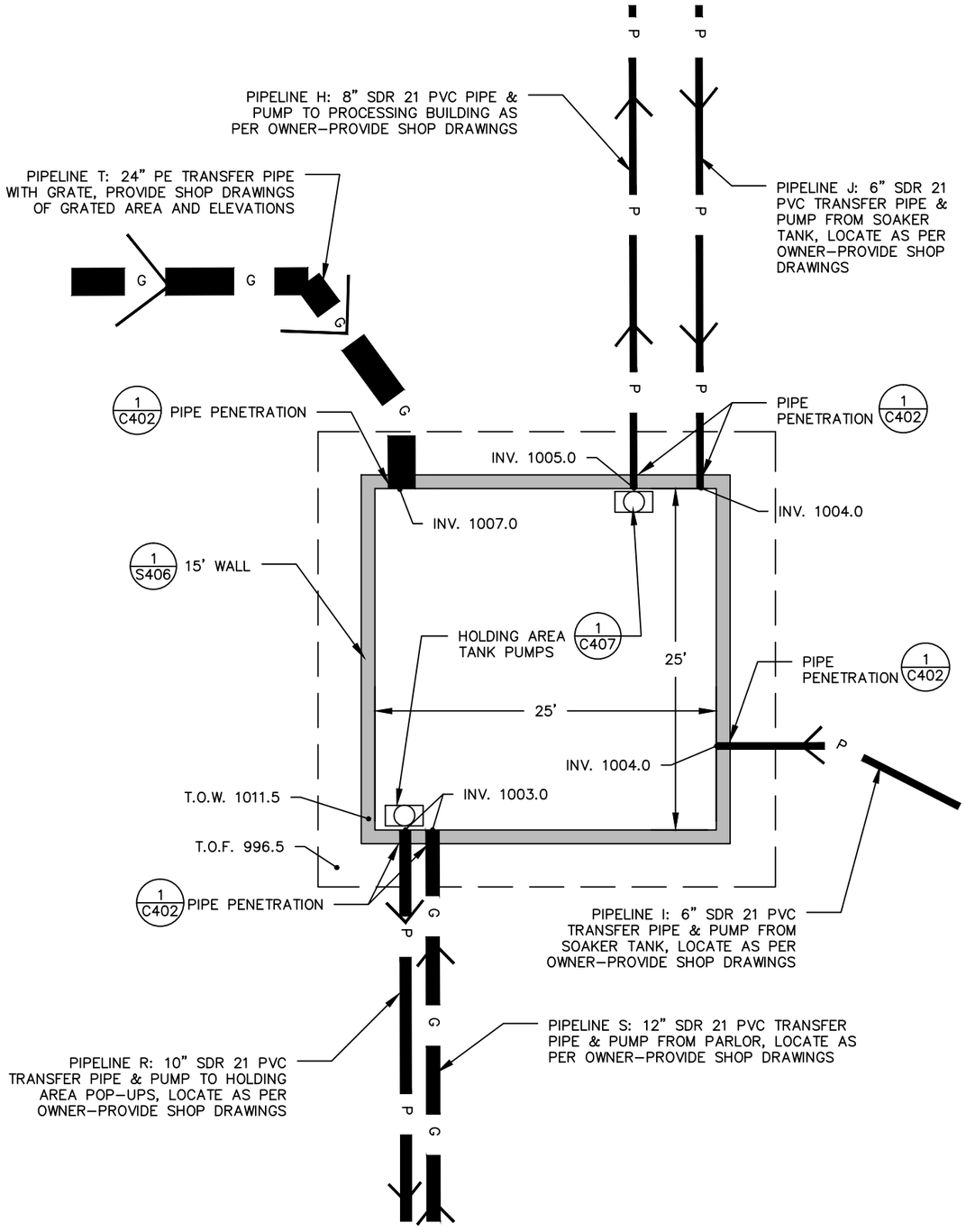

NOTE: CONFIRM PIPE SIZES AND INVERTS WITH PUMP SUPPLIERS AND BUILDING CONTRACTORS.

1 S105 HOLDING AREA FLUSH TANK
SCALE 1:10

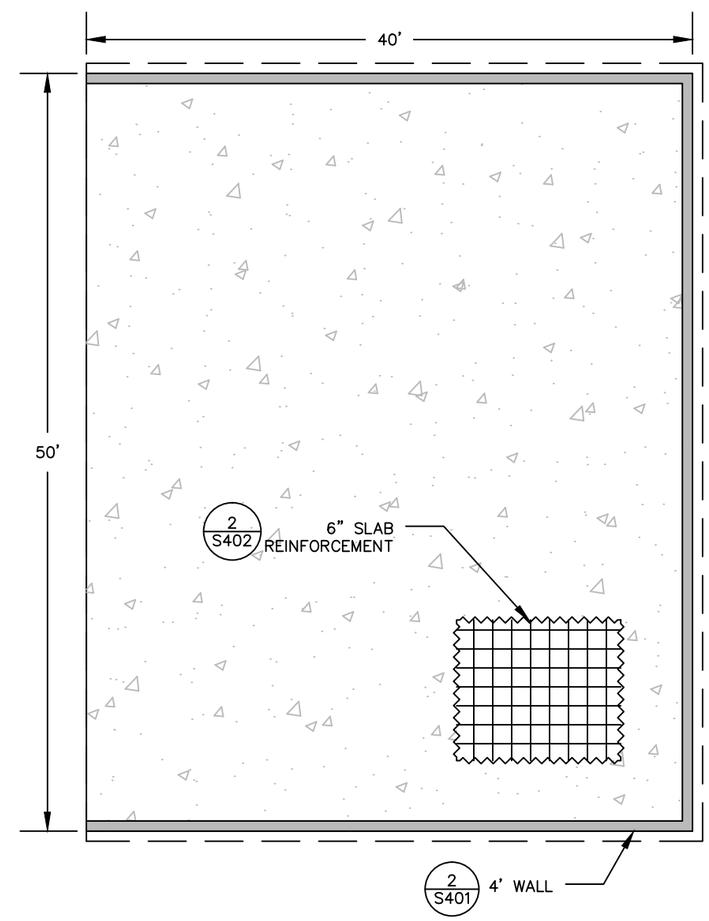

2 S105 CLEAN SAND STACKING PAD
SCALE 1:10

REVISIONS:
DATE
DATE
DATE
DATE

RESOURCE ENGINEERING ASSOCIATES, INC.
Resource Engineering Associates, Inc.
3510 Parmenter St., Suite 100
Middleton, Wisconsin 53562-2507
Phone: 608-831-5522
Fax: 608-831-6564
Web: www.reaeng.com

TANK LAYOUTS
FACILITY SITE PLAN
GOLDEN SANDS DAIRY
8550 CENTRAL SANDS ROAD
BANCROFT, WI 54921

DATE: AUG 2013
DRAWN: EML
CHECKED: DRW
APPROVED: RJP
DRAWING NAME: 1232structural6.1.dwg
PROJECT NUMBER: 120032.1

S105

N:\REA12\Wysocki120032_1\Civil\1232structural6.1.dwg

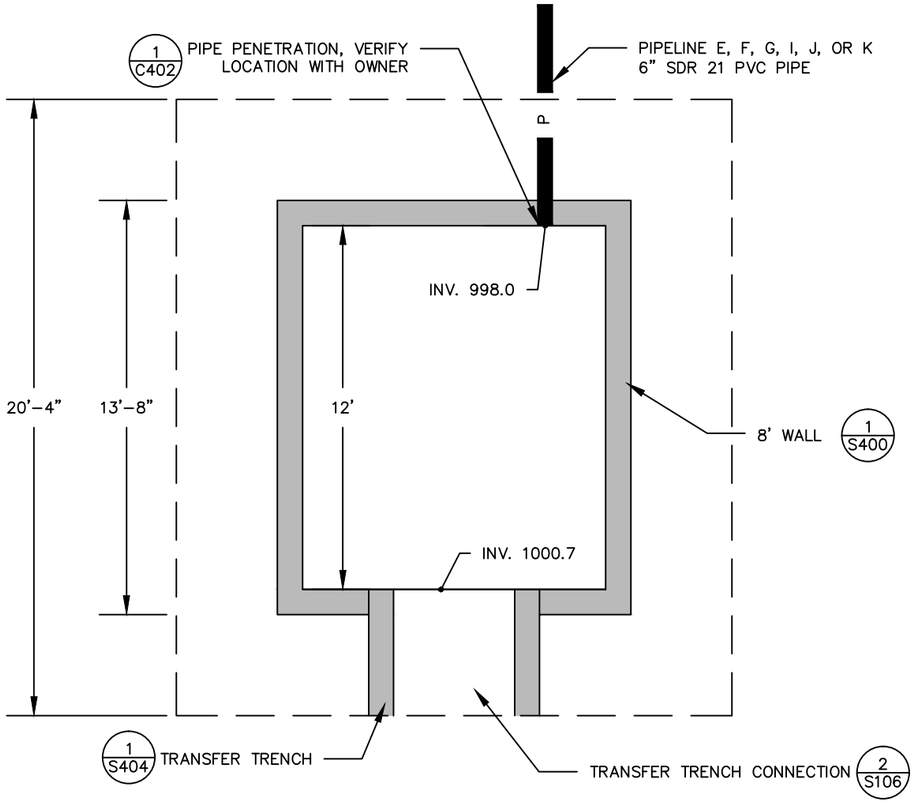

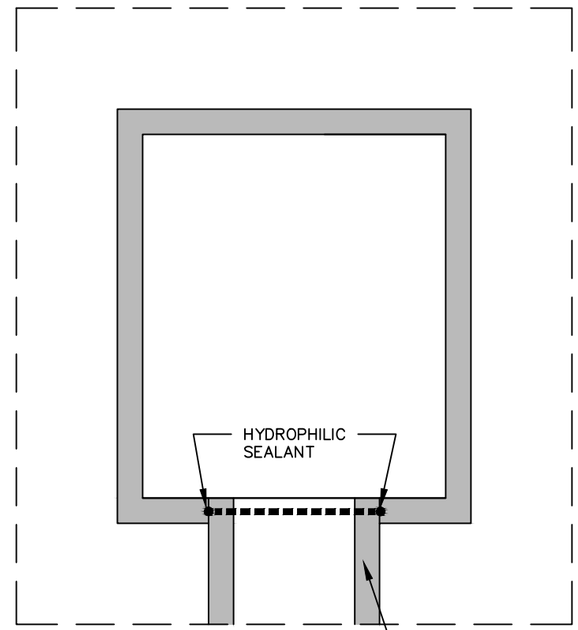

PLAN VIEW

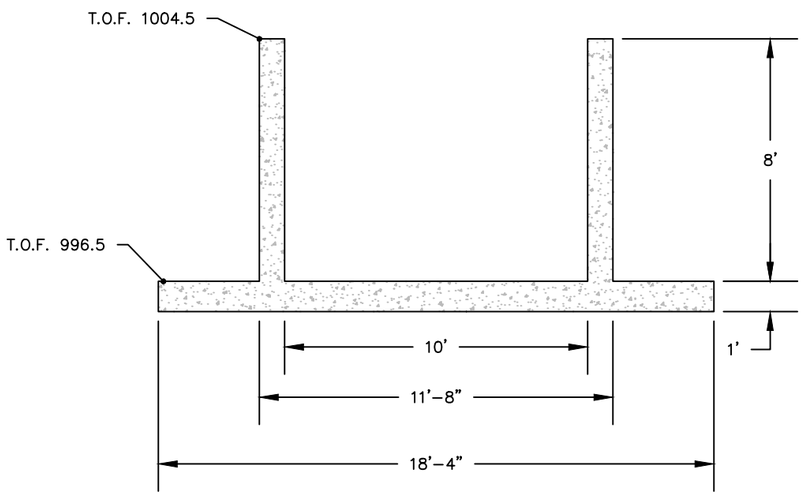

1 / S106 SOAKER WATER TANK
NOT TO SCALE

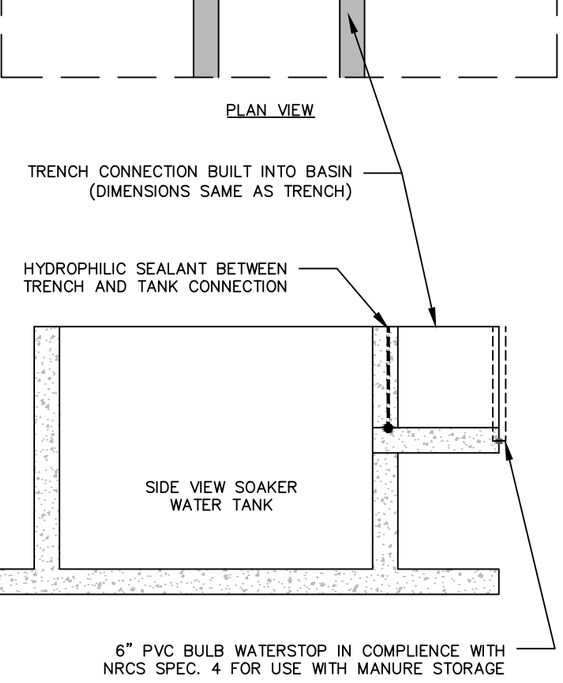

2 / S106 TRENCH CONNECTION
NOT TO SCALE

REVISIONS:
DATE
DATE
DATE
DATE

RESOURCE ENGINEERING ASSOCIATES, INC.
Resource Engineering Associates, Inc.
3510 Parmenter St., Suite 100
Middleton, Wisconsin 53562-2507
Phone: 608-831-5522
Fax: 608-831-6564
Web: www.reaeng.com

CLEAN SAND STACKING PAD
FACILITY SITE PLAN
GOLDEN SANDS DAIRY
8550 CENTRAL SANDS ROAD
BANCROFT, WI 54921

DATE: AUG 2013
DRAWN: EML
CHECKED: DRW
APPROVED: RJP
DRAWING NAME: 1232structural6.1.dwg
PROJECT NUMBER: 120032.1

S106

N:\REA12\Wysocki120032_1\Civil\1232structural6.1.dwg

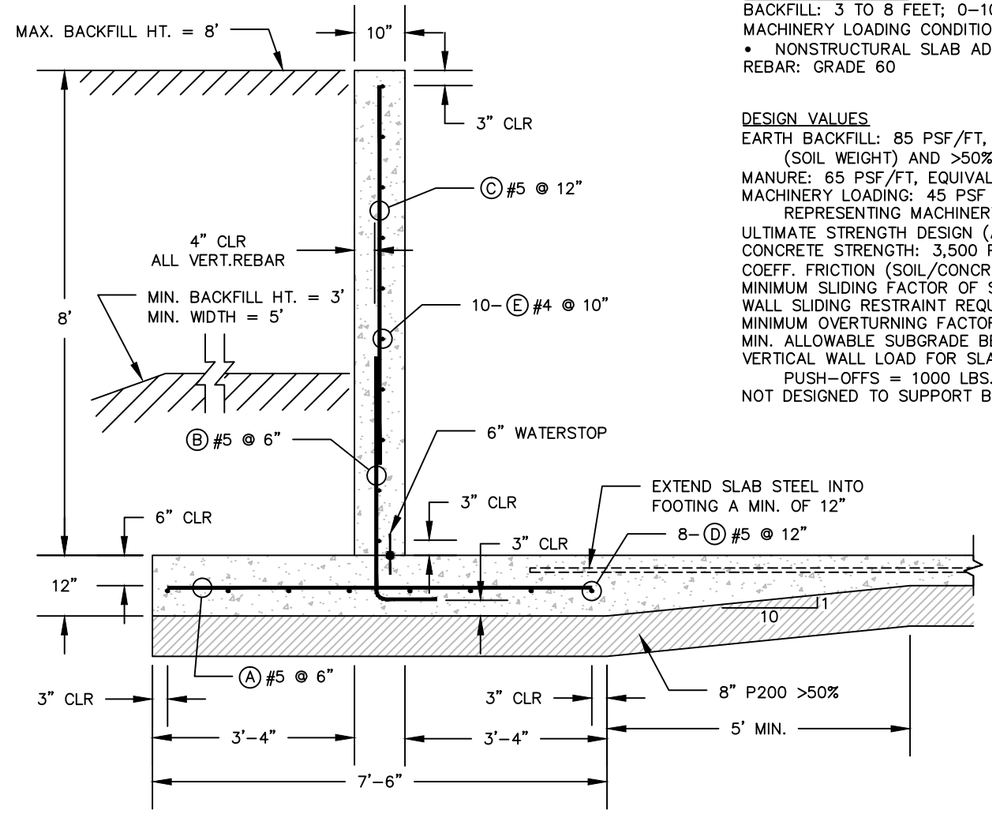

WALL SECTION

CONDITIONS OF USE
BACKFILL: 3 TO 8 FEET; 0-100% FINES
MACHINERY LOADING CONDITIONS ALLOWED: (SEE DWG. 580)
• NONSTRUCTURAL SLAB ADJACENT TO OR ON WALL (B)
REBAR: GRADE 60

DESIGN VALUES
EARTH BACKFILL: 85 PSF/FT, EQUIVALENT FLUID PRESSURE 110 PCF (SOIL WEIGHT) AND >50% FINES
MANURE: 65 PSF/FT, EQUIVALENT FLUID PRESSURE
MACHINERY LOADING: 45 PSF EQUIVALENT FLUID PRESSURE REPRESENTING MACHINERY LOAD ON NONSTRUCTURAL SLAB
ULTIMATE STRENGTH DESIGN (ACI 318-99)
CONCRETE STRENGTH: 3,500 PSI REBAR: GRADE 60
COEFF. FRICTION (SOIL/CONCRETE) = 0.5
MINIMUM SLIDING FACTOR OF SAFETY = 1.5
WALL SLIDING RESTRAINT REQUIRED
MINIMUM OVERTURNING FACTOR OF SAFETY = 2.0
MIN. ALLOWABLE SUBGRADE BEARING CAPACITY = 2000 PSF
VERTICAL WALL LOAD FOR SLABS BEARING ON WALLS AND PUSH-OFFS = 1000 LBS./FT.
NOT DESIGNED TO SUPPORT BUILDINGS OR ROOFS

TYPE 2 BAR

STEEL SCHEDULE (60 GRADE)					
MARK	SIZE	TYPE	R	S	LENGTH
A	#5	STR	- - -	- - -	7'-0"
B	#5	2	4'-0"	1'-0"	5'-0"
C	#5	STR	- - -	- - -	6'-3"
D	#5	STR	- - -	- - -	
E	#4	STR	- - -	- - -	
L	#4	2	2'-0"	2'-0"	4'-0"

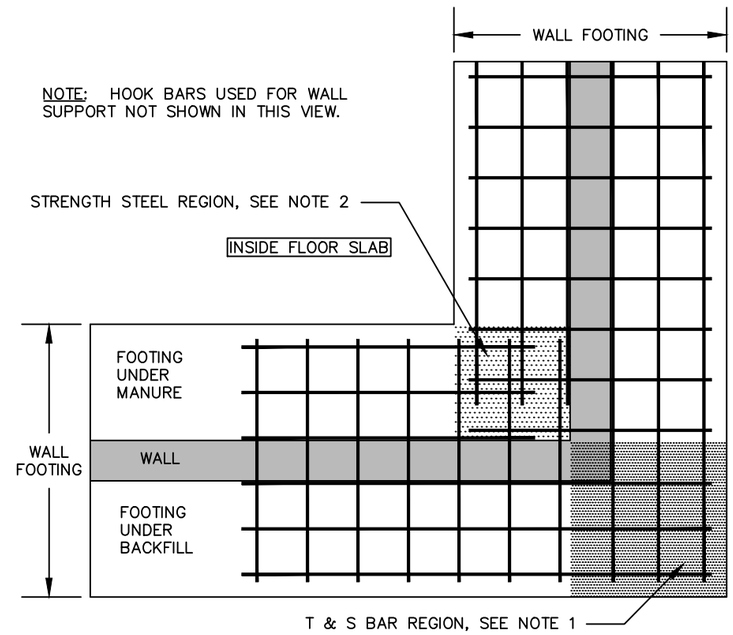

FOOTING CORNER SCHEMATIC

NOTES FOR FOOTING STEEL PLACEMENT:
1. FOOTING TEMPERATURE AND SHRINKAGE STEEL (T&S) TO BE EXTENDED INTO THIS REGION FROM BOTH SIDES OF CORNER. REGION IS OUTSIDE EXTENSION OF WALLS INCLUDING WALL THICKNESS.
2. STRENGTH STEEL IS EXTENDED INTO THIS REGION FROM BOTH SIDES OF CORNER. REGION IS INSIDE EXTENSION OF THE WALLS. FOOTING SLAB T&S STEEL OUTSIDE THE CORNER REGION TO LAP SPLICE WITH THE STRENGTH STEEL 16 INCHES.
3. IN BOTH CORNER REGIONS, STRENGTH STEEL AND T&S STEEL WILL REQUIRE SWITCHING POSITIONS FROM TOP TO BOTTOM AND VICE VERSA.

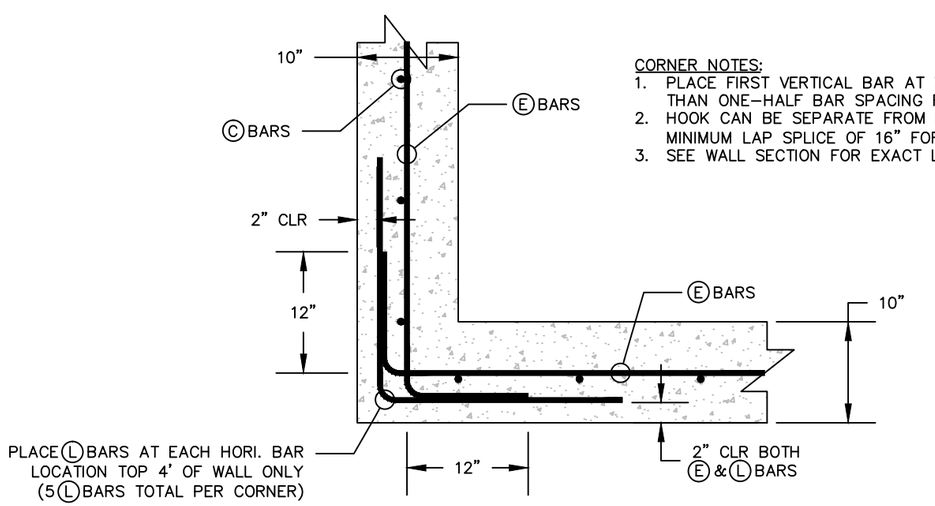

CORNER NOTES:
1. PLACE FIRST VERTICAL BAR AT WALL CORNER OR NO FURTHER THAN ONE-HALF BAR SPACING FROM THE INSIDE CORNER.
2. HOOK CAN BE SEPARATE FROM E BARS, PROVIDED THAT MINIMUM LAP SPLICE OF 16" FOR #4 BARS IS MET.
3. SEE WALL SECTION FOR EXACT LOCATIONS OF Ⓒ AND Ⓔ BARS.

CORNER BAR SCHEMATIC
PLAN VIEW - TOP 4 FEET OF WALL SHOWN

1 / S400 8' WALL AND CORNER
SCALE 1:30

STANDARD NRCS DRAWINGS WI-571 & WI-586

REVISIONS:
DATE
DATE
DATE
DATE

RESOURCE ENGINEERING ASSOCIATES, INC.
Resource Engineering Associates, Inc.
3510 Parmenter St., Suite 100
Middleton, Wisconsin 53562-2507
Phone: 608-831-5522
Fax: 608-831-6564
Web: www.reaeng.com

8' WALL
FACILITY SITE PLAN
GOLDEN SANDS DAIRY
8550 CENTRAL SANDS ROAD
BANCROFT, WI 54921

DATE: AUG 2013
DRAWN: EML
CHECKED: DRW
APPROVED: RJP
DRAWING NAME: 1232structural6.1.dwg
PROJECT NUMBER: 120032.1

S400

N:\REA12\Wysocki120032_1\Civil\1232structural6.1.dwg

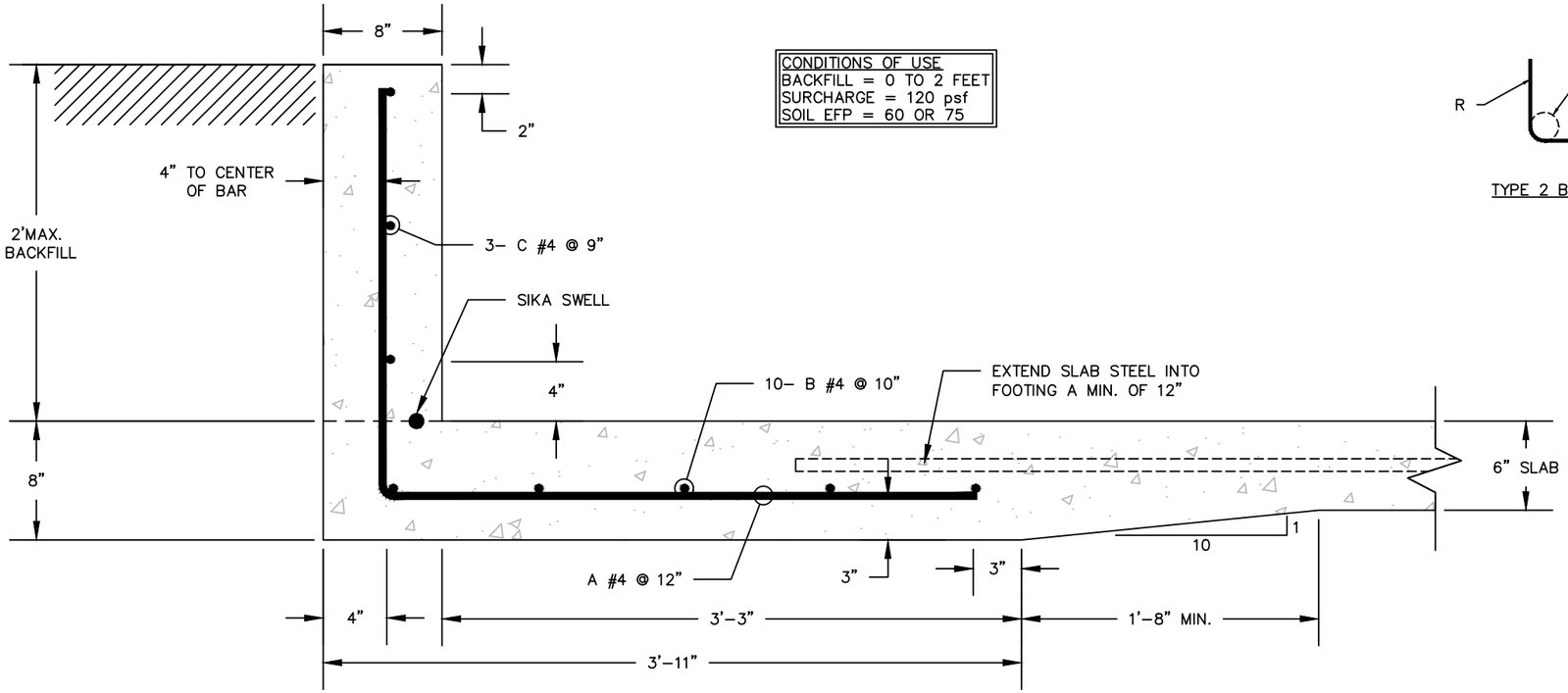

CONDITIONS OF USE
BACKFILL = 0 TO 2 FEET
SURCHARGE = 120 psf
SOIL EFP = 60 OR 75

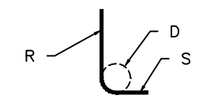

TYPE 2 BAR

STEEL SCHEDULE (60 GRADE)					
MARK	SIZE	TYPE	R	S	LENGTH
A	#4	2	3'–4"	2'–3"	5'–7"
B	#4	STR	– – –	– – –	
C	#4	STR	– – –	– – –	

1 / S401 2' WALL
SCALE 1:10

STANDARD NRCS DRAWINGS WI–522

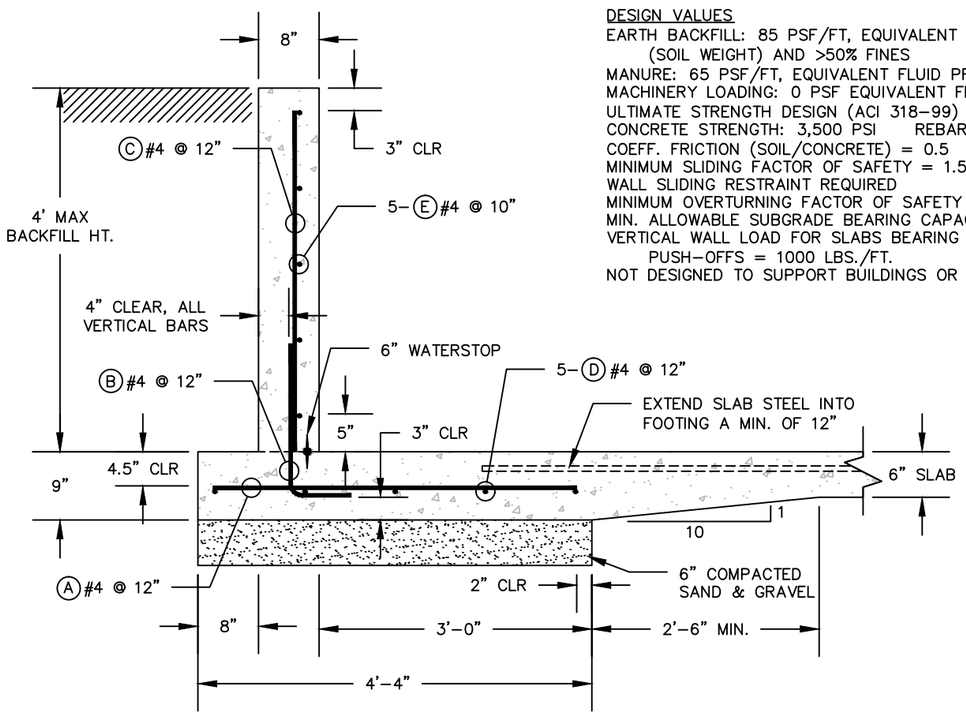

WALL SECTION

DESIGN VALUES
EARTH BACKFILL: 85 PSF/FT, EQUIVALENT FLUID PRESSURE 110 PCF (SOIL WEIGHT) AND >50% FINES
MANURE: 65 PSF/FT, EQUIVALENT FLUID PRESSURE
MACHINERY LOADING: 0 PSF EQUIVALENT FLUID PRESSURE
ULTIMATE STRENGTH DESIGN (ACI 318–99)
CONCRETE STRENGTH: 3,500 PSI REBAR: GRADE 60
COEFF. FRICTION (SOIL/CONCRETE) = 0.5
MINIMUM SLIDING FACTOR OF SAFETY = 1.5
WALL SLIDING RESTRAINT REQUIRED
MINIMUM OVERTURNING FACTOR OF SAFETY = 2.0
MIN. ALLOWABLE SUBGRADE BEARING CAPACITY = 2000 PSF
VERTICAL WALL LOAD FOR SLABS BEARING ON WALLS AND PUSH–OFFS = 1000 LBS./FT.
NOT DESIGNED TO SUPPORT BUILDINGS OR ROOFS

CONDITIONS OF USE
BACKFILL: 0 TO 4 FEET; 0–100% FINES
MACHINERY LOADING CONDITIONS ALLOWED: NONE (SEE DWG. 540)
• STRUCTURAL SLAB OR PUSH–OFF ON WALL (A)
REBAR: GRADE 60

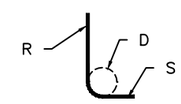

TYPE 2 BAR

STEEL SCHEDULE (60 GRADE)					
MARK	SIZE	TYPE	R	S	LENGTH
A	#4	STR	– – –	– – –	4'–0"
B	#4	2	1'–8"	0'–8"	2'–4"
C	#4	STR	– – –	– – –	3'–9"
D	#4	STR	– – –	– – –	
E	#4	STR	– – –	– – –	
L	#4	2	2'–0"	2'–0"	4'–0"

CORNER NOTES:
1. PLACE FIRST VERTICAL BAR AT WALL CORNER OR NO FURTHER THAN ONE–HALF BAR SPACING FROM THE INSIDE CORNER.
2. HOOK CAN BE SEPARATE FROM E BARS, PROVIDED THAT MINIMUM LAP SPLICE OF 16" FOR #4 BARS IS MET.
3. SEE WALL SECTION FOR EXACT LOCATIONS OF Ⓒ AND Ⓔ BARS.

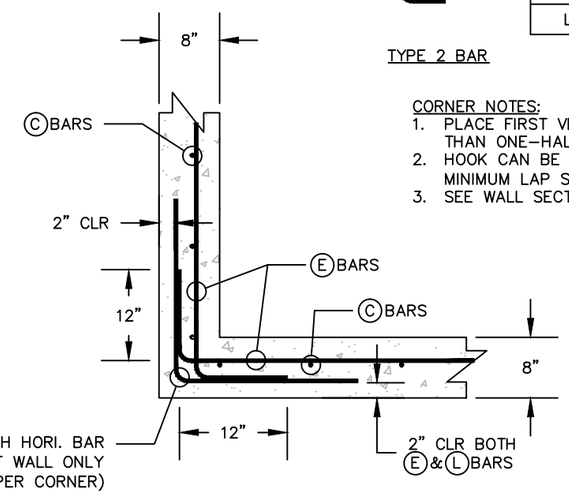

2 / S401 4' WALL
SCALE 1:20

STANDARD NRCS DRAWINGS WI–542

REVISIONS:
DATE
DATE
DATE
DATE

RESOURCE ENGINEERING ASSOCIATES, INC.
Resource Engineering Associates, Inc.
3510 Parmenter St., Suite 100
Middleton, Wisconsin 53562-2507
Phone: 608-831-5522
Fax: 608-831-6564
Web: www.reaeng.com

2' & 4' WALLS
FACILITY SITE PLAN
GOLDEN SANDS DAIRY
8550 CENTRAL SANDS ROAD
BANCROFT, WI 54921

DATE: AUG 2013
DRAWN: EML
CHECKED: DRW
APPROVED: RJP
DRAWING NAME: 1232structural6.1.dwg
PROJECT NUMBER: 120032.1

S401

N:\REA12\Wysocki120032_1\Civil\1232structural6.1.dwg

LOCATIONS:
- SOLIDS STACKING PAD
- FEED STORAGE PAD

DESIGN PARAMETERS:
- f'c = 4,000 psi
- SOIL K = 250 pci
- AXLE LOAD = 17,000 lbs (SINGLE AXLE)
- 60,000 REPETITIONS FOR 20 YR LIFE

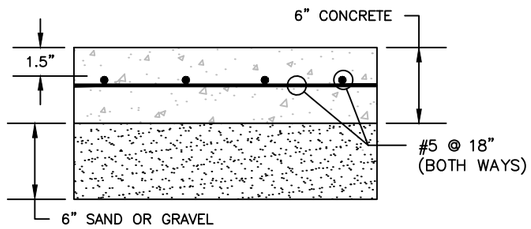

SECTION

1 / S402 CONCRETE SLAB
NOT TO SCALE

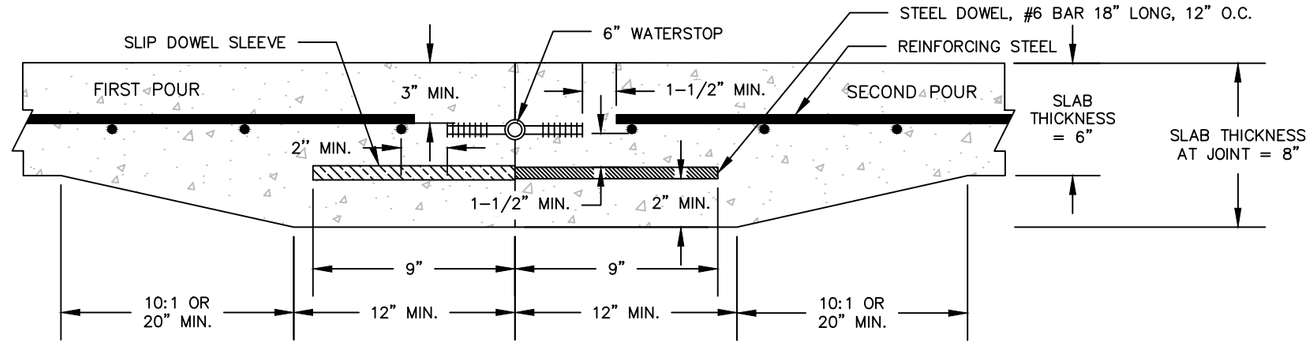

CROSS SECTION OF SLAB AT WATERSTOP JOINT

4 / S402 SLAB WATERSTOP
NOT TO SCALE

NOTE: THE SLAB AT THE JOINT MUST BE GREATER THAN OR EQUAL TO 8".

STANDARD NRCS DRAWING NO. WI-505D

LOCATIONS:
- CLEAN SAND STACKING PADS
- FEED STORAGE BASIN

DESIGN PARAMETERS:
- f'c = 4,000 psi
- SOIL K = 250 pci
- AXLE LOAD = 17,000 lbs (SINGLE AXLE)
- 60,000 REPETITIONS FOR 20 YR LIFE

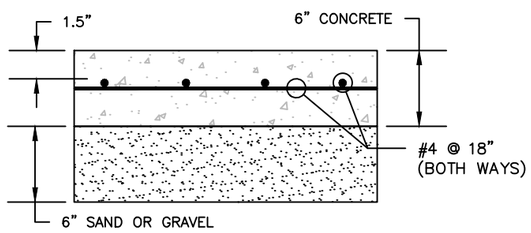

SECTION

2 / S402 CONCRETE SLAB
NOT TO SCALE

CONSTRUCTION NOTES: (SLAB & WALL WATERSTOPS)
1. FACTORY CORNERS AND TRANSITIONS SHALL BE USED, LEAVING ONLY STRAIGHT BUTT JOINT SPLICES FOR FIELD WELDING.
2. SEE JOINT PLANS, SHEETS S100–S105, FOR LOCATIONS OF JOINTS.

INSTALLATION: (SLAB & WALL WATERSTOPS)
A. POSITION THE WATERSTOP AND DOWEL AS SHOWN IN THE DRAWING.
B. SECURE THE WATERSTOP ALONG ITS LENGTH AT THE CENTER BULB AND SUFFICIENTLY AT THE WEB TO HOLD IT IN PLACE.
C. FOLLOW THE MANUFACTURERS RECOMMENDATIONS TO INSTALL THE DOWEL AND SLEEVE.
D. PLACE CONCRETE WITHOUT DISPLACING THE WATERSTOP.
E. THOROUGHLY VIBRATE CONCRETE AROUND THE WATERSTOP TO PREVENT VOIDS.
F. AFTER THE FIRST POUR, CLEAN THE UNEMBEDDED WATERSTOP WEB TO INSURE FULL CONTACT WITH THE SECOND POUR OF CONCRETE.
G. INSTALLATION METHODS SHALL BE IN STRICT COMPLIANCE WITH THE MANUFACTURER'S REQUIREMENTS.

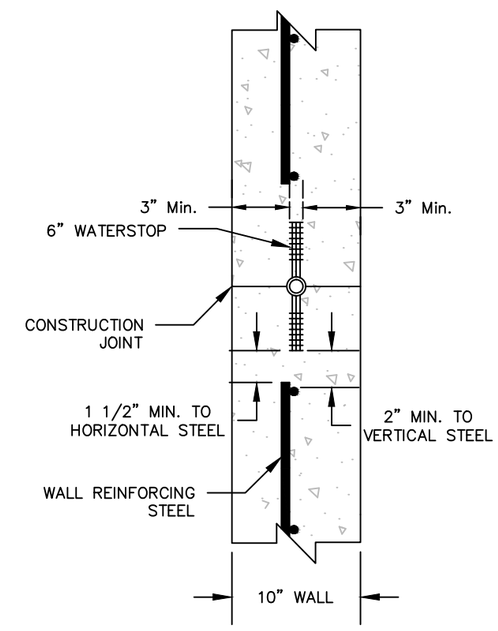

CROSS SECTION OF WALL AT WATERSTOP JOINT

6 / S402 WALL WATERSTOP
NOT TO SCALE

MODIFIED NRCS DRAWING NO. WI-505A

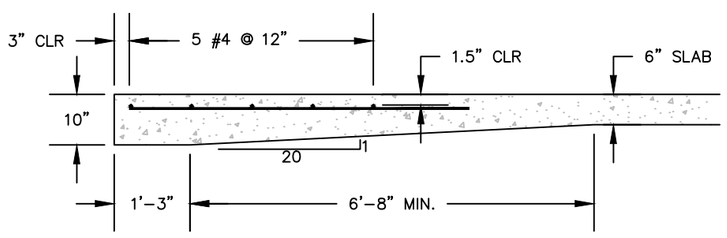

3 / S402 THICKENED SLAB EDGE
SCALE 1:30

LOCATIONS:
- WSF #1, #2, & #3

DESIGN PARAMETERS:
- f'c = 4,000 psi
- SOIL K = 250 pci
- AXLE LOAD = 17,000 lbs (SINGLE AXLE)
- 60,000 REPETITIONS FOR 20 YR LIFE

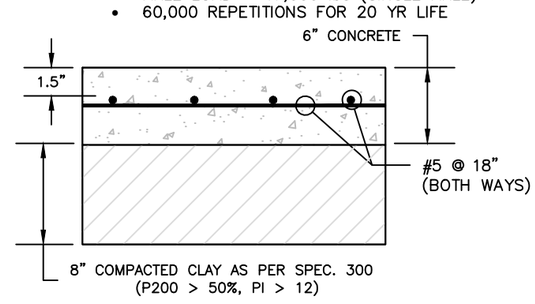

SECTION

5 / S402 CONCRETE SLAB
NOT TO SCALE

REVISIONS:
DATE
DATE
DATE
DATE

RESOURCE ENGINEERING ASSOCIATES, INC.
Resource Engineering Associates, Inc.
3510 Parmenter St., Suite 100
Middleton, Wisconsin 53562-2507
Phone: 608-831-5522
Fax: 608-831-6564
Web: www.reaeng.com

STRUCTURAL DETAILS
FACILITY SITE PLAN
GOLDEN SANDS DAIRY
8550 CENTRAL SANDS ROAD
BANCROFT, WI 54921

DATE: AUG 2013
DRAWN: EML
CHECKED: DRW
APPROVED: RJP
DRAWING NAME: 1232structural6.1.dwg
PROJECT NUMBER: 120032.1

S402

N:\REA12\Wysocki120032_1\Civil\1232structural6.1.dwg

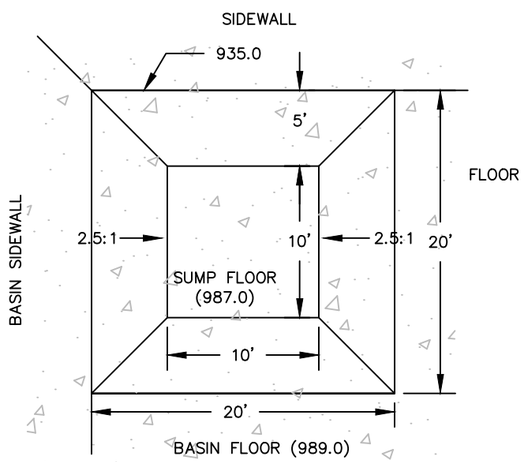

PLAN VIEW

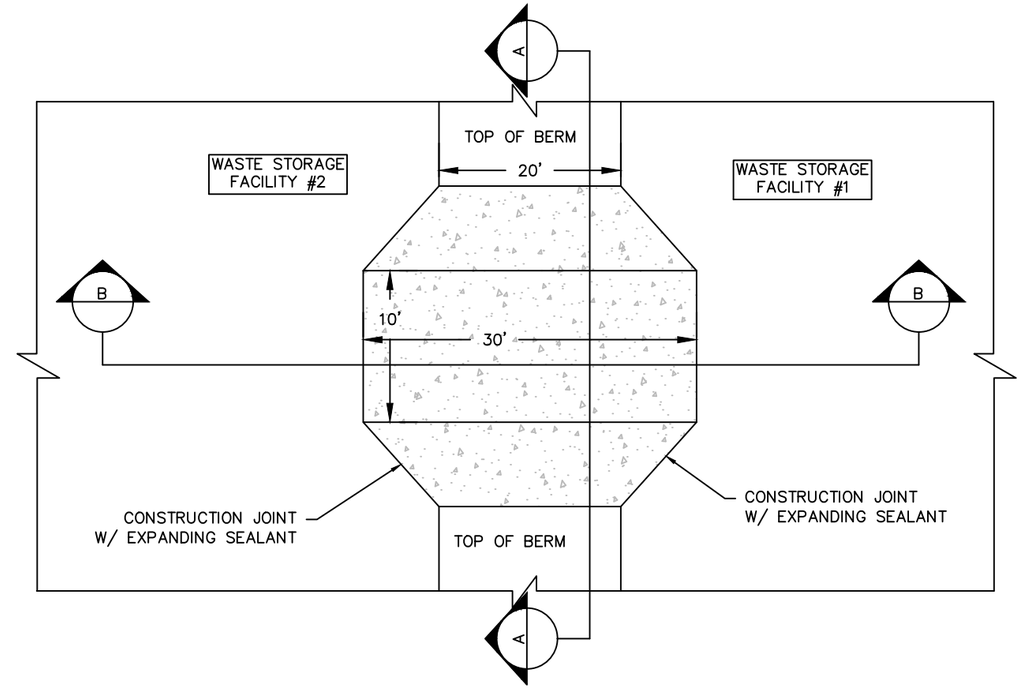

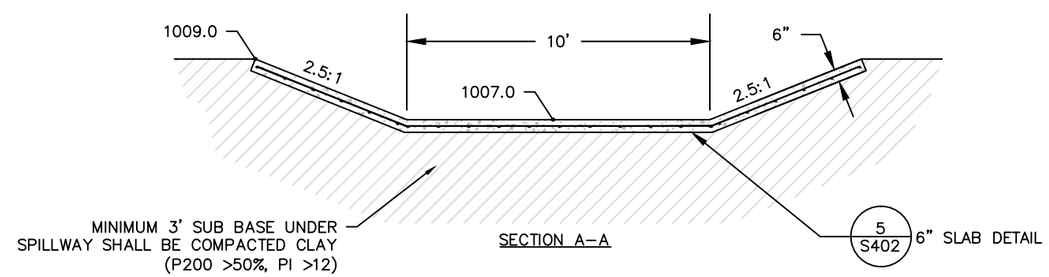

SECTION A–A

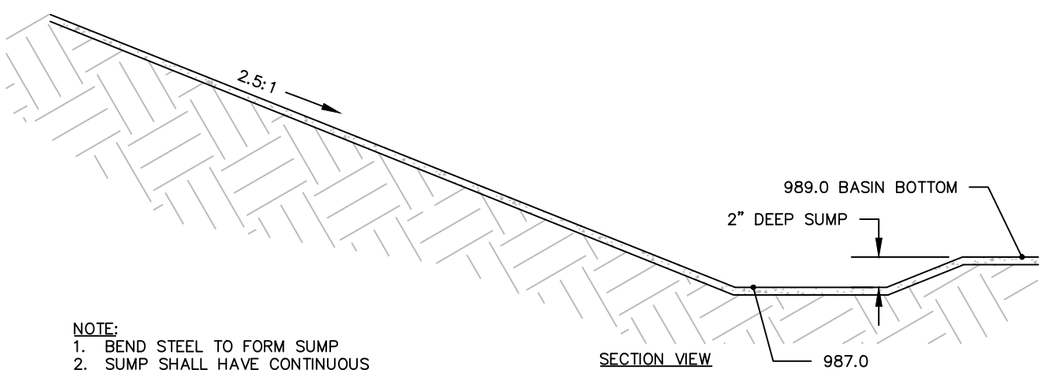

SECTION VIEW

NOTE:
1. BEND STEEL TO FORM SUMP
2. SUMP SHALL HAVE CONTINUOUS REINFORCEMENT STEEL (#4 BARS @ 12")
3. CONCRETE THICKNESS IN THIS SECTION OF THE BASIN IS 6"

3 / C405 BASIN SUMP
SCALE 1:10

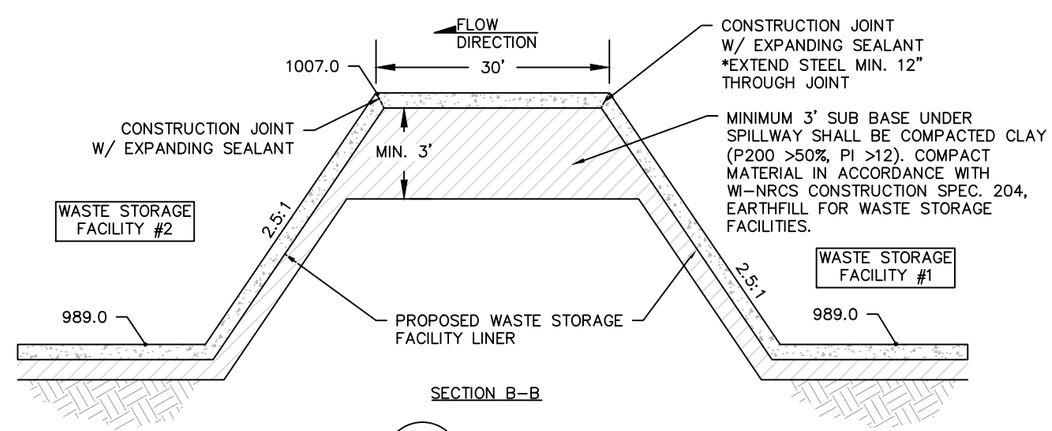

SECTION B–B

2 / S403 OVERFLOW WEIR
NOT TO SCALE

REVISIONS:
DATE
DATE
DATE
DATE

RESOURCE ENGINEERING ASSOCIATES, INC.
Resource Engineering Associates, Inc.
3510 Parmenter St., Suite 100
Middleton, Wisconsin 53562-2507
Phone: 608-831-5522
Fax: 608-831-6564
Web: www.reaeng.com

STRUCTURAL DETAILS
FACILITY SITE PLAN
GOLDEN SANDS DAIRY
8550 CENTRAL SANDS ROAD
BANCROFT, WI 54921

DATE: AUG 2013
DRAWN: EML
CHECKED: DRW
APPROVED: RJP
DRAWING NAME: 1232structural6.1.dwg
PROJECT NUMBER: 120032.1

S403

N:\REA12\Wysocki120032_1\Civil\1232structural6.1.dwg

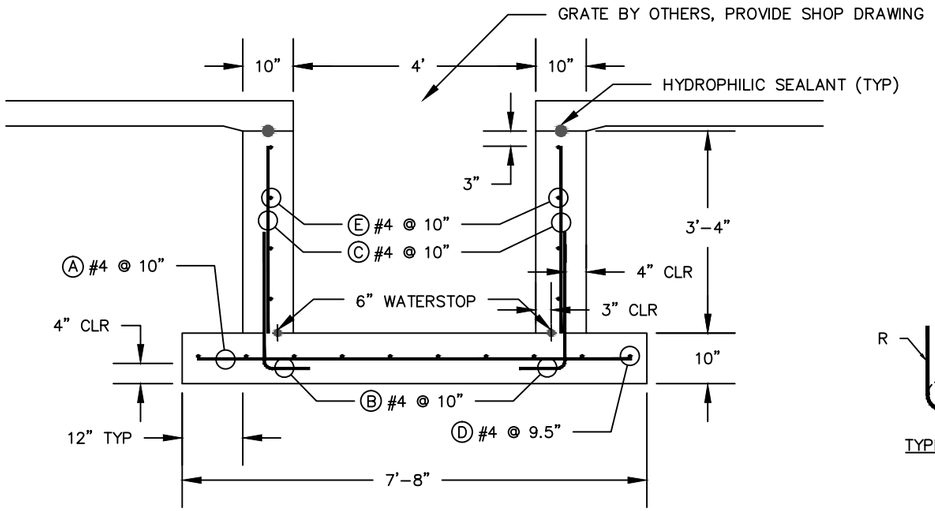

1 S404 TRANSFER TRENCH
SCALE 1:30

STEEL SCHEDULE (60 GRADE)					
MARK	SIZE	TYPE	R	S	LENGTH
A	#4	STR	– – –	– – –	7'-2"
B	#4	2	2'-3"	0'-9"	3'-0"
C	#4	STR	– – –	– – –	3'-1"
D	#4	STR	– – –	– – –	
E	#4	STR	– – –	– – –	
L	#4	2	2'-3"	0'-9"	3'-0"
L1	#4	STR	– – –	– – –	3'-9"

NOTE: SPECIFIC LOCATION OF TRENCH TO BE COORDINATED WITH BARN CONTRACTOR

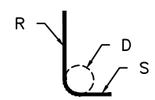

TYPE 2 BAR

SIMILAR TO NRCS DRAWING WI-541

LOCATION:
- FEED STORAGE PAD (NORTHEAST CORNER)

DESIGN PARAMETERS:
- f'c = 4,000 psi
- SOIL K = 250 pci
- AXLE LOAD = 50,000 lbs (DUAL AXLE)
- 32,000 REPETITIONS FOR 20 YR LIFE

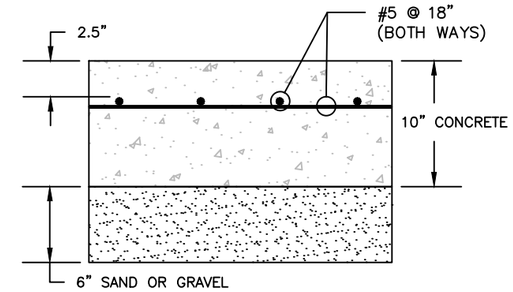

SECTION

2 S404 CONCRETE SLAB
NOT TO SCALE

REVISIONS:
DATE
DATE
DATE
DATE

RESOURCE ENGINEERING ASSOCIATES, INC.
Resource Engineering Associates, Inc.
3510 Parmenter St., Suite 100
Middleton, Wisconsin 53562-2507
Phone: 608-831-5522
Fax: 608-831-6564
Web: www.reaeng.com

STRUCTURAL DETAILS
FACILITY SITE PLAN
GOLDEN SANDS DAIRY
8550 CENTRAL SANDS ROAD
BANCROFT, WI 54921

DATE: AUG 2013
DRAWN: EML
CHECKED: DRW
APPROVED: RJP
DRAWING NAME: 1232structural6.1.dwg
PROJECT NUMBER: 120032.1

S404

N:\REA12\Wysocki120032_1\Civil\1232structural6.1.dwg

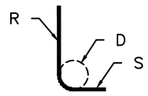

TYPE 2 BAR

STEEL SCHEDULE (60 GRADE)					
MARK	SIZE	TYPE	R	S	LENGTH
A	#5	STR	– – –	– – –	7'–0"
B	#5	2	4'–0"	1'–0"	5'–0"
C	#5	STR	– – –	– – –	6'–3"
D	#5	STR	– – –	– – –	
E	#4	STR	– – –	– – –	
L	#4	2	2'–0"	2'–0"	4'–0"

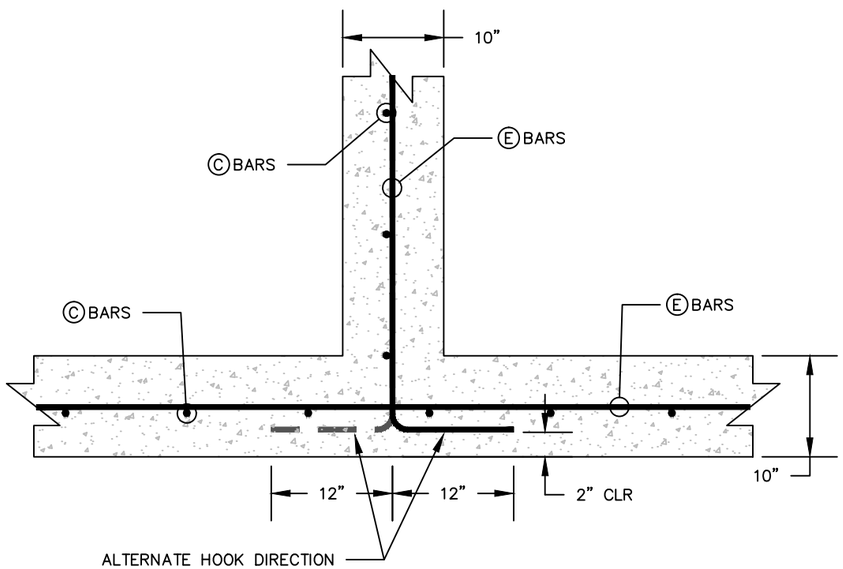

1 S405 TEE CORNER
NOT TO SCALE

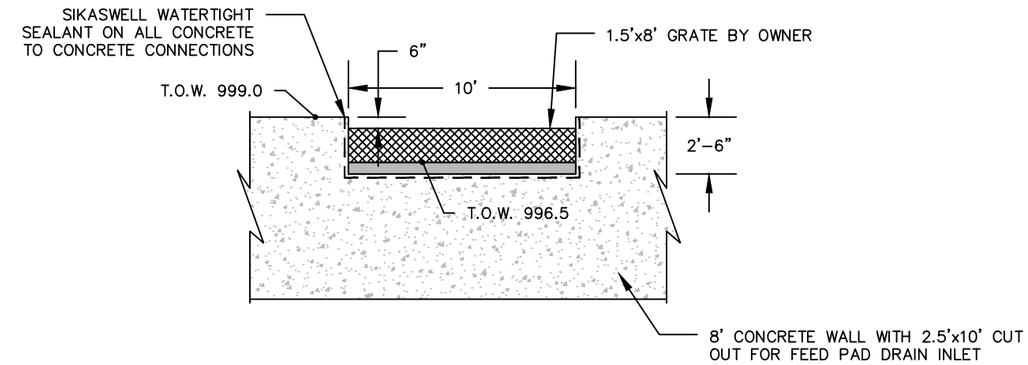

NOTE: OWNER TO CONSTRUCT GRATE TO TRAP SOLIDS. GRATE TO BE 1.5' TALL.

NORTH ELEVATION

2 S405 FEED PAD BASIN INLET
NOT TO SCALE

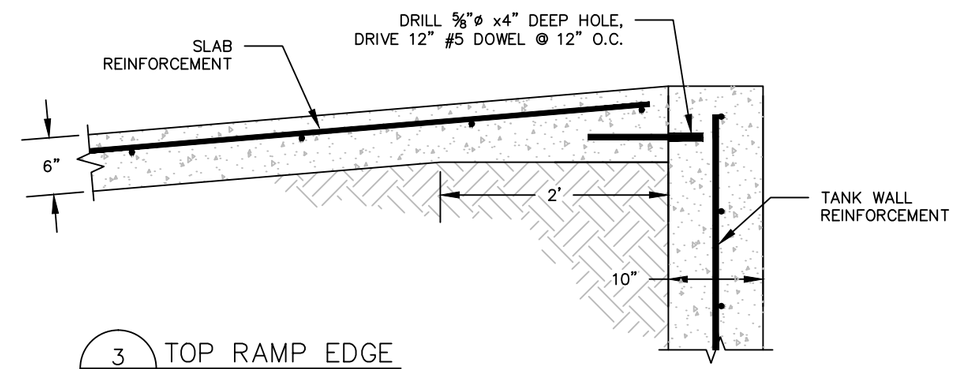

3 S405 TOP RAMP EDGE
NOT TO SCALE

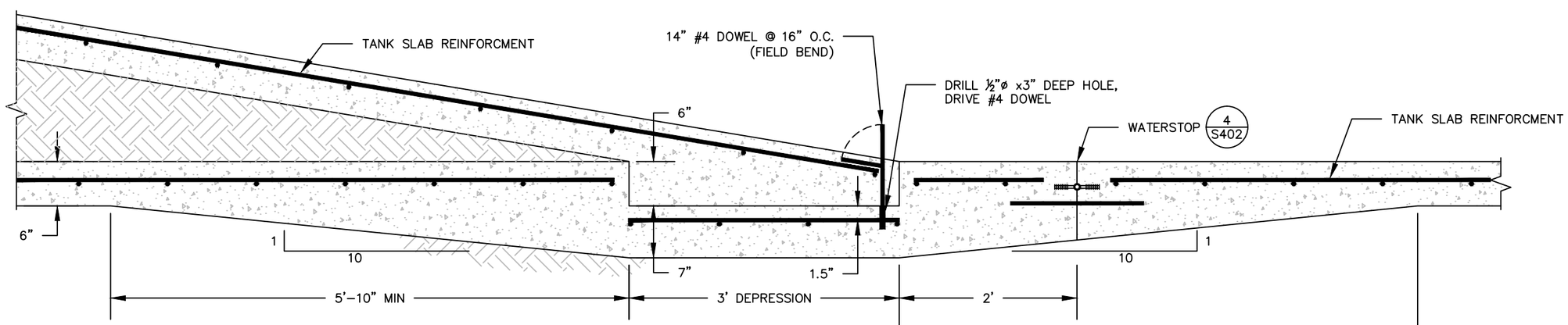

4 S405 RAMP TOE
NOT TO SCALE

REVISIONS:
DATE
DATE
DATE
DATE

RESOURCE ENGINEERING ASSOCIATES, INC.
Resource Engineering Associates, Inc.
3510 Parmenter St., Suite 100
Middleton, Wisconsin 53562-2507
Phone: 608-831-5522
Fax: 608-831-6564
Web: www.reaeng.com

STRUCTURAL DETAILS
FACILITY SITE PLAN
GOLDEN SANDS DAIRY
8550 CENTRAL SANDS ROAD
BANCROFT, WI 54921

DATE: AUG 2013
DRAWN: EML
CHECKED: DRW
APPROVED: RJP
DRAWING NAME: 1232structural6.1.dwg
PROJECT NUMBER: 120032.1

S405

N:\REA12\Wysocki120032_1\Civil\1232structural6.1.dwg

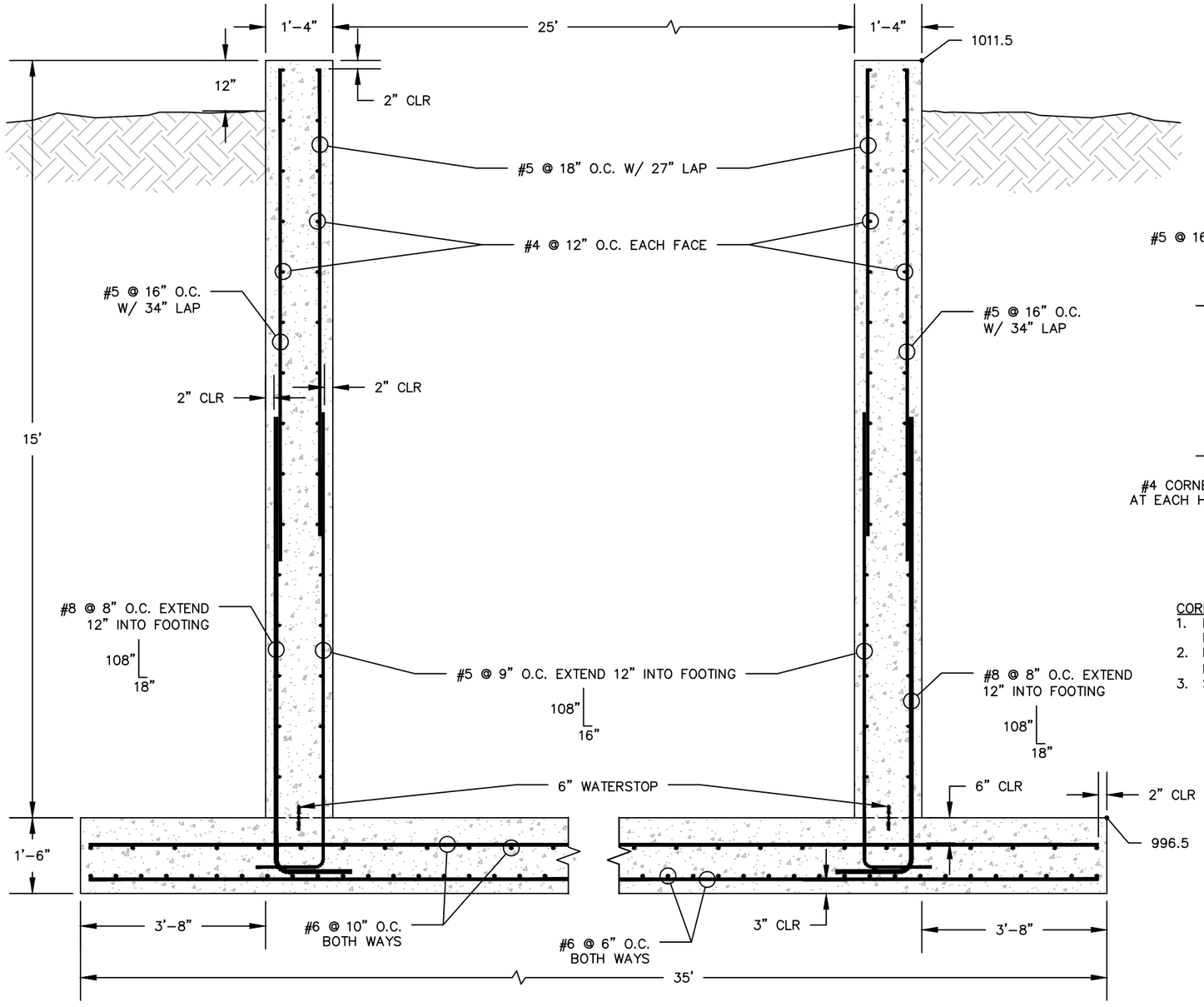

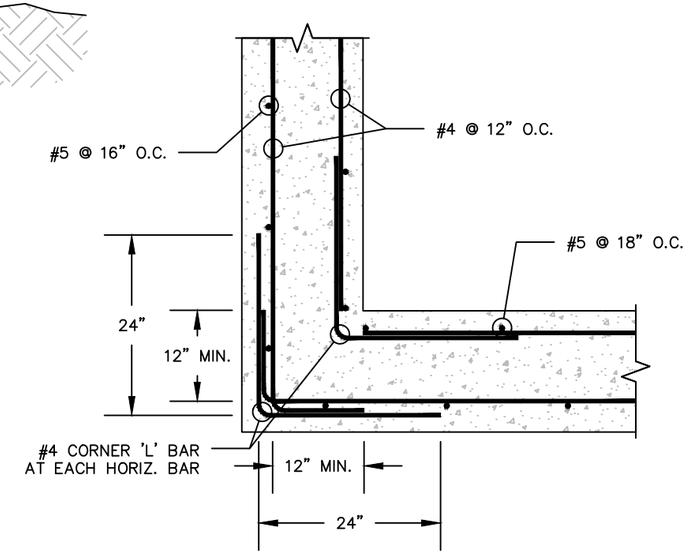

CORNER NOTES:
1. PLACE FIRST VERTICAL BAR AT WALL CORNER OR NO FURTHER THAN ONE-HALF BAR SPACING FROM THE INSIDE CORNER.
2. HOOK CAN BE SEPARATE FROM #4 HORIZONTAL BARS, PROVIDED THAT MINIMUM LAP SPLICE OF 19" FOR #4 BARS IS MET.
3. SEE WALL SECTION FOR EXACT LOCATIONS OF #5 VERTICAL BARS.

CONDITIONS OF USE
BACKFILL: 14 FEET
- MACHINERY LOADING CONDITIONS ALLOWED
- 6' TO 10' OF MANURE

REBAR: GRADE 60

DESIGN VALUES
EARTH BACKFILL: 60 PSF/FT, EQUIVALENT FLUID PRESSURE 110 PCF (SOIL WEIGHT)
MANURE: 72 PSF/FT, EQUIVALENT FLUID PRESSURE
MACHINERY LOADING: 120 PSF EQUIVALENT FLUID PRESSURE REPRESENTING MACHINERY LOAD ON SOIL

1 / S406 15' WALL
SCALE 1:30

N:\REA12\Wysocki120032_1\Civil\1232structural6.1.dwg

REVISIONS:
DATE
DATE
DATE
DATE

RESOURCE ENGINEERING ASSOCIATES, INC.
Resource Engineering Associates, Inc.
3510 Parmenter St., Suite 100
Middleton, Wisconsin 53562-2507
Phone: 608-831-5522
Fax: 608-831-6564
Web: www.reaeng.com

15' WALL
FACILITY SITE PLAN
GOLDEN SANDS DAIRY
8550 CENTRAL SANDS ROAD
BANCROFT, WI 54921

DATE: NOV 2013
DRAWN: EML
CHECKED: DRW
APPROVED: RJP
DRAWING NAME: 1232structural6.1.dwg
PROJECT NUMBER: 120032.1

S406

GOLDEN SANDS DAIRY
SAND SEPARATOR BUILDING

NEKOOSA, WISCONSIN

PROJECT NO. 1310190WI

DRAWING INDEX

SHEET	TITLE
S0.1	COVER SHEET
S1.1	FOUNDATION PLAN
S2.1	STEEL FRAMING PLAN
S6.1	FOUNDATION DETAILS
S6.2	FOUNDATION DETAILS
S6.3	FOUNDATION DETAILS
S6.4	FOUNDATION DETAILS
S6.5	FOUNDATION DETAILS
S9.1	STEEL FRAMING DETAILS

SITE MAP

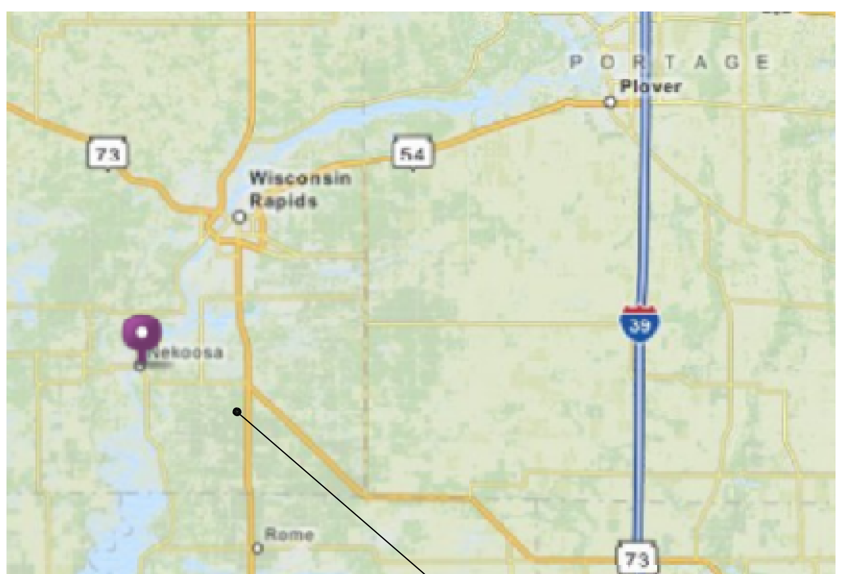

STRUCTURAL NOTES

GENERAL:

1. THE LIQUID MANURE WASTE STORAGE TANK HAS BEEN DESIGNED TO MEET REQUIREMENTS OF 2013 NRCS 313.
2. DESIGN LOADS
   a. EXTERNAL SOIL "AT REST" PRESSURE = 60 PSF/F (NATIVE SOIL)
   b. SAND-LADEN MANURE PRESSURE = 72 PSF/F PER NRCS
   c. BUILDING LOADS = AS PROVIDED BY BUILDING MANUFACTURER
3. LOADING CONDITIONS
   a. ALL WALLS DESIGNED FOR MAXIMUM BACK FILL ELEVATION WITH EMPTY TANK
   b. WALLS IN AREA OF EQUIPMENT DRIVE ACCESS HAVE BEEN DESIGNED ASSUMING SOIL BACK FILL IS 1'-0" FROM TOP OF WALL.
   c. THE WALLS ARE DESIGNED AS A STRAIGHT CANTILEVERED WALL WITH AT-REST SOIL LOADING CONDITIONS.
4. THE STRUCTURE IS DESIGNED TO FUNCTION AS A UNIT UPON COMPLETION. THE CONTRACTOR IS RESPONSIBLE FOR DESIGNING AND FURNISHING ALL TEMPORARY BRACING, FORM WORK AND/OR OTHER SUPPORT THAT MAY BE REQUIRED AS THE RESULT OF THE CONTRACTOR'S CONSTRUCTION METHODS AND/OR SEQUENCES. THE STRUCTURAL ENGINEER ASSUMES NO LIABILITY FOR THE STRUCTURE DURING CONSTRUCTION.
5. THE CONTRACTOR IS RESPONSIBLE FOR ALL MEANS AND METHODS OF CONSTRUCTION AND ALL JOB SITE SAFETY.
6. THE CONTRACTOR SHALL FIELD VERIFY ALL DIMENSIONS AND EXISTING CONDITIONS PRIOR TO CONSTRUCTION. NOTIFY THE ENGINEER AND ARCHITECT OF ANY DISCREPANCY IMMEDIATELY.
7. THE CONTRACTOR IS RESPONSIBLE FOR COORDINATION OF ALL BUILDING MATERIALS AND COMPONENTS. INDEPENDENTLY PREPARED SHOP DRAWINGS ARE REQUIRED OF ALL TRADES FOR COORDINATION AND BEST PRACTICE. ERRORS OR OMISSIONS IN INSTALLATION DUE TO THE CONTRACTOR'S FAILURE TO COORDINATE THE WORK WILL BE THE SOLE RESPONSIBILITY OF THE CONTRACTOR.
8. THE CONTRACTOR SHALL NOTIFY MP-SQUARED WHEN ALL REINFORCING IS TIED IN PLACE AND MINIMUM OF 24HOURS PRIOR TO PLACING CONCRETE.

FOUNDATION:

1. PROJECT GEOTECHNICAL REPORT SUPERSEDES GEOTECHNICAL INFORMATION PROVIDED ON STRUCTURAL PLANS.
2. PRESUMPTIVE SOIL BEARING CAPACITY = 2,000 PSF.
3. ALL FOOTINGS SHALL BEAR ON COMPACTED SOIL HAVING A MINIMUM ALLOWABLE BEARING CAPACITY EQUAL TO THE PRESUMPTIVE CAPACITY ABOVE.
4. THE ENGINEER SHALL BE NOTIFIED IF ACTUAL FIELD CONDITIONS DO NOT MEET BEARING REQUIREMENTS, OR IF QUESTIONABLE SOIL CONDITIONS ARE DISCOVERED INCLUDING BUT NOT LIMITED TO PEAT AND OTHER HIGH ORGANIC SOILS OR EXPANSIVE CLAY.
5. SLAB ON GROUND TO BE CONSTRUCTED ON COMPACTED SUBGRADE TO 95% MODIFIED PROCTOR OR AS DIRECTED BY THE GEOTECHNICAL ENGINEER.
6. ALL BEARING SOIL OR FILL MUST BE PROTECTED FROM FREEZING. THE CONTRACTOR SHALL PROVIDE PROTECTION TO PREVENT FROST PENETRATION BELOW THE CONCRETE BEARING ELEVATIONS. ANY FROZEN SOIL BELOW THE FOUNDATION BEARING LEVEL MUST BE REMOVED PRIOR TO PLACING CONCRETE.
7. ALL SLABS ON GRADE AREAS SHALL BE PROOF ROLLED. ALL SOFT SPOTS SHALL BE REMOVED AND REPLACED WITH NON-FROZEN MATERIAL OF SAME CLASSIFICATION AS APPROVED SOIL. CONTACT SITE ENGINEER PRIOR TO PLACEMENT OF MATERIAL.
8. WHEN IT IS POSSIBLE FOR GROUND WATER TO SEEP TOWARD SUBGRADE FOUNDATIONS AND RETAINING WALLS, THESE WALLS SHALL HAVE A POSITIVE DRAINAGE SYSTEM AT THE BASE OF THE WALL CONSISTING OF A PERFORATED DRAIN PIPE PROTECTED BY A GEOTEXTILE FABRIC SURROUNDED BY CONCRETE SAND (TORPEDO SAND). NEAR THE BASE OF THE WALL. OTHER BACK FILL MATERIAL SHALL BE SAND WITH LESS THAN 12% PASSING THE #200 SIEVE.
9. DO NOT USE EXCESSIVE COMPACTION EFFORTS ADJACENT TO RETAINING WALLS. SUCCESSIVE PASSES OF A COMPACTOR CAN RESULT IN WALL PRESSURE BUILD UP BEYOND THE DESIGN INTENT.
10. REFER TO THE GEOTECHNICAL INVESTIGATION FOR INFORMATION REGARDING EXCAVATION, SIDE SLOPES, SUB-GRADE PREPARATION, AND FILL RECOMMENDATIONS.
11. REMOVE TOPSOIL FROM BENEATH ALL PROPOSED CONSTRUCTION AREAS. SALVAGE AND STOCK PILE TOPSOIL, CUT/FILL MATERIAL AS NECESSARY TO MATCH GRADES SHOWN ON SITE PLAN DRAWINGS.
12. ALL FILL MATERIAL USED IN GRADING OPERATIONS SHALL CONSIST OF EARTH, WHICH IS FREE OF DEBRIS, BOULDERS OR ORGANIC MATERIAL. FILL SHALL BE PLACED IN MAXIMUM OF 12" LIFTS AND COMPACTED TO 95% OF MODIFIED PROCTOR MAXIMUM DRY DENSITY OR AS DIRECTED BY THE GEOTECHNICAL ENGINEER.

CONCRETE CONSTRUCTION:

1. THE CONTRACTOR SHALL REVIEW AND FOLLOW ALL REQUIREMENTS OF WISCONSIN CONSTRUCTION SPECIFICATION 4 -CONCRETE AND NOTES BELOW. ANY DEVIATION FROM THIS SPECIFICATION OR NOTES SHALL BE BROUGHT TO THE ATTENTION OF THE ENGINEER FOR REVIEW AND APPROVAL.
2. ALL CONCRETE DESIGN AND CONSTRUCTION SHALL CONFORM TO THE LOCAL BUILDING CODE REQUIREMENTS AND THOSE OF THE LATEST EDITION OF THE FOLLOWING STANDARDS:
   a. WISCONSIN CONSTRUCTION SPECIFICATION 4 -CONCRETE,
   b. WISCONSIN NRCS, 2009
   c. ACI 318, ACI 360, ACI 315, ACI 301, AND ACI 307.
3. ALL CONCRETE SHALL BE NORMAL WEIGHT (145 PCF). ALL CONCRETE, CONCRETE PLACEMENT AND CURING SHALL CONFORM TO SPECIFICATIONS OF USDA-NRCS-WISCONSIN SECTION IV UNLESS SPECIFICALLY NOTED OTHERWISE. CONCRETE SHALL ACHIEVE A MINIMUM 28 DAY COMPRESSIVE STRENGTH (fc') AS FOLLOWS:
   a. SLAB-ON-GROUND fc' = 5,000 PSI
   b. FOOTING fc' = 4,000 PSI
   c. CONTAINMENT TANK WALLS fc' = 4,000 PSI
4. THE READY MIX CONCRETE SUPPLIER SHALL PROVIDE A MIX DESIGN THAT MINIMIZES SHRINKAGE. THIS MIX DESIGN SHALL MINIMIZE THE AMOUNT OF WATER TO 0.4 -0.45 W/C RATIO, MINIMIZE CONCRETE PASTE, AND USE AGGREGATES OF APPROPRIATE TYPE, SIZE AND GRADATION PER ACI 360.
5. WHEN APPLICABLE, GROUT USED TO SEAL AROUND PIPE PENETRATION SHALL BE NON-SHRINK, NON-METALLIC GROUT WITH A COMPRESSIVE STRENGTH EQUAL TO OR GREATER THAN THE COMPRESSIVE STRENGTH OF THE SURROUNDING CONCRETE MEMBER.
6. ALL CONCRETE SUBJECT TO EXTERIOR EXPOSURE SHALL BE AIR ENTRAINED BETWEEN 4% AND 8%. ALL CONCRETE WITHOUT SUPERPLASTICIZERS SHALL HAVE A MAXIMUM SLUMP OF 4".
7. UNLESS THE MIX DESIGN INCLUDES THE USE OF SUPERPLASTICIZERS, CONCRETE WITH A SLUMP GREATER THAN 5" SHALL BE REFUSED. CONCRETE WITH APPROVED SUPERPLASTICIZERS SHALL NOT HAVE A SLUMP OF GREATER THAN 8".
8. CALCIUM CHLORIDE AND OR ADMIXTURES CONTAINING CALCIUM CHLORIDE SHALL NOT BE USED.
9. ALL CONCRETE REINFORCING STEEL TO BE ASTM A615 GRADE 60. ALL REINFORCING SHALL BE DETAILED AND PLACED IN ACCORDANCE WITH ACI 315 AND 315R.
10. ALL REINFORCING BARS SHALL BE SET ON CHAIRS AND TIED IN PLACE.
11. THE SUBGRADE SHOULD BE DAMPENED JUST PRIOR TO PLACING SLAB-ON-GROUND CONCRETE UNLESS PLASTIC SHEETING/ VAPOR BARRIER IS USED.
12. AFTER CONCRETING HAS STARTED, IT SHALL BE CARRIED ON AS A CONTINUOUS OPERATION UNTIL PLACING OF A PANEL OR SECTION, AS DEFINED BY ITS BOUNDARIES OR PREDETERMINED JOINTS, IS COMPLETED. CONCRETE SHALL BE DEPOSITED AS NEARLY AS PRACTICABLE TO ITS FINAL POSITION TO AVOID SEGREGATION DUE TO REHANDLING OR FLOWING.
13. CONCRETING OPERATIONS SHALL BE CARRIED ON AT SUCH A RATE THAT THE CONCRETE IS AT ALL TIMES PLASTIC AND FLOWS READILY INTO SPACES BETWEEN REINFORCEMENT.
14. CONCRETE SHALL BE THOROUGHLY CONSOLIDATED BY SUITABLE MEANS DURING PLACEMENT AND SHALL BE THOROUGHLY WORKED AROUND REINFORCEMENT AND EMBEDDED FIXTURES AND INTO CORNERS OF THE FORMS. THE TOP SURFACES OF VERTICALLY FORMED LIFTS SHALL BE GENERALLY LEVEL.
15. IF CONCRETE EDGE BECOMES NON-PLASTIC AND WILL NOT READILY MERGE WITH SUCCESSIVE CONCRETE PLACEMENTS A CONSTRICTION JOINT MUST BE INSTALLED. RETEMPERED CONCRETE, CONCRETE THAT HAS BEEN REMIXED AFTER INITIAL SET OR PARTIALLY HARDENED SHALL NOT BE USED IN THE STRUCTURE.
16. CONCRETE SHALL BE CURED ABOVE 50°F (10°C) AND IN A MOIST CONDITION FOR AT LEAST THE FIRST SEVEN DAYS AFTER PLACEMENT.
17. ALL FLAT WORK CONCRETE SHALL BE COVERED IMMEDIATELY FOLLOWING SAW CUTTING AND MAINTAINED CONTINUOUSLY WET FOR A MINIMUM OF 7-DAYS AFTER PLACING (PONDING METHOD). CURING SHEETS ARE TO BE USED AND REMAIN IN PLACE.
18. SLAB REINFORCING BARS SHALL BE PLACED WITHIN 1-1/2" OF THE TOP OF THE SLAB UNLESS NOTED OTHERWISE. PLACING REINFORCING ON CHAIRS OR BOLSTERS AT 3' TO 4' ON CENTER IS REQUIRED. LIFTING REINFORCING AFTER CONCRETE IS PLACED IS NOT CONSIDERED TO BE AN EFFECTIVE MEANS OF PLACEMENT AND SHALL NOT BE ALLOWED.
19. ALL LAPS SHALL BE "B" SPLICES UNLESS NOTED OTHERWISE ON THE DRAWINGS OR UNLESS SPECIAL CARE IS TAKEN FOR THE REINFORCING TO BE DETAILED AND PLACED TO PROVIDE STAGGERED LAPS.
20. ALL CONCRETE SHALL BE CURED FOR A MINIMUM OF SEVEN DAYS.
21. UNLESS OTHERWISE APPROVED, ALL EXPOSED CONCRETE WALLS SHALL BE CURED WITH FORMS LEFT IN PLACE FOR SEVEN DAYS. IF FORMS CAN NOT BE LEFT IN PLACE THE CONTRACTOR SHALL SUBMIT IN WRITING TO THE ENGINEER ALL PROPOSED CURING METHODS.
22. SOME FINE LINE RANDOM SHRINKAGE CRACKING MAY DEVELOP HOWEVER PER NRCS 313-10, ACI 360 & PCA 2008 WITH THE USE OF STEEL AS SHOWN THESE CRACKS ARE EXPECTED TO PERFORM AT A WATERTIGHT LEVEL. LARGER WALL AND FLOOR CRACKS DUE TO IMPROPER CURING METHODS, WEATHER PROTECTION, SUBSTITUTION, DELETION OR MISPLACEMENT OF REINFORCEMENT OR IMPROPER MIX DESIGN SHALL BE THE RESPONSIBILITY OF THE CONTRACTOR.

CONCRETE-CONT:

23. UNLESS NOTED OTHERWISE ON THE DRAWINGS ALL REINFORCING SHALL BE LAPPED TO DEVELOP ITS CAPACITY AS FOLLOWS:

BAR SIZE	STANDARD	TOP BAR	"B" SPLICE	HOOK
#3	13"	16"	16"	6"
#4	17"	22"	22"	8"
#5	21"	27"	27"	10"
#6	25"	32"	32"	12"
#7	33"	43"	43"	14"

MULTIPLY B-SPLICE LENGTHS BY 1.3 FOR TOP BAR CONDITIONS. TOP BARS ARE HORIZONTAL BARS WITH 12 INCHES OR MORE OF CONCRETE BELOW.

24. PLACING OF CONCRETE SHALL BE DONE IN CONFORMANCE WITH ACI-306 FOR COLD WEATHER AND ACI-305 FOR HOT WEATHER.
25. DO NOT USE EXCESSIVE COMPACTION EFFORTS ADJACENT TO RETAINING WALLS. SUCCESSIVE PASSES OF A COMPACTOR CAN RESULT IN WALL PRESSURE BUILD UP BEYOND THE DESIGN INTENT.
26. EXPOSED FOUNDATION WALLS SHALL HAVE CAST-IN-PLACE VERTICAL CONTROL JOINTS SPACED NOT MORE THAN 25'-0" ON CENTER OR 15' FROM CORNERS. EACH JOINT SHALL BE 3/4" WIDE BY 1/4 WALL DEPTH DEEP AND V-CHAMFERED ON BOTH SIDES. HORIZONTAL WALL REINFORCING SHALL BE DISCONTINUOUS AT THE CONTROL JOINT LOCATION. THE LOCATION OF WALL CONTROL JOINTS SHALL BE MID BAY BETWEEN COLUMNS. SEE DETAIL 5/S6.1
27. EXPOSED FOUNDATIONS WALLS SHALL HAVE EXPANSION JOINTS LOCATED EVERY 100'O.C. MAX. SEE CONCRETE DETAIL 5/S6.1 FOR SPECIFIC CONSTRUCTION REQUIREMENTS.

WATERSTOP:

CONSTRUCTION NOTES:

1. FACTORY CORNERS AND TRANSITIONS SHALL BE USED, LEAVING ONLY STRAIGHT BUTT JOINT SPLICES FOR FIELD WELDING.

INSTALLATION:

1. CENTER THE WATERSTOP ON THE JOINT.
2. SECURE THE WATERSTOP ALONG ITS LENGTH AT THE CENTER BULB AND SUFFICIENTLY AT THE WEB TO HOLD IT IN PLACE.
3. PLACE CONCRETE WITHOUT DISPLACING THE WATERSTOP.
4. THOROUGHLY VIBRATE CONCRETE AROUND WATERSTOP TO PREVENT VOIDS.
5. AFTER THE FIRST POUR, CLEAN THE UNEMBEDDED WATERSTOP WEB TO INSURE FULL CONTACT WITH THE SECOND POUR OF CONCRETE.
6. INSTALLATION METHODS SHALL BE IN STRICT COMPLIANCE WITH THE MANUFACTURERS REQUIREMENTS.

SPECIFICATIONS:

1. WORK CONSISTS OF PROVIDING FLEXIBLE WATERSTOPS, EMBEDDED IN CONCRETE WALLS, TO SPAN CONTROL AND/OR CONSTRUCTION JOINTS.
2. WATERSTOP MUST FORM A CONTINUOUS SEAL THROUGHOUT THE STRUCTURE.
3. WATERSTOP IS TO BE MANUFACTURED PVC, THERMOPLASTIC ELASTOMERIC RUBBER, (TPE), OR POLYETHYLENE P.E. MATERIAL WITH A MINIMUM WEB THICKNESS OF 3/16".
4. WATERSTOP IS TO BE FREE OF DIRT, OIL, AND DEFECTS.

SPLICE FABRICATION:

1. PROVIDE FACTORY FABRICATED WATERSTOP CORNERS AND TRANSITIONS LEAVING ONLY STRAIGHT BUTT JOINT SPLICES FOR FIELD FABRICATION, UNLESS SPECIFICALLY APPROVED IN WRITING BY THE MANUFACTURER AND PERFORMED IN ACCORDANCE WITH THEIR SPECIFICATIONS.
2. USE ONLY A SPLICING IRON SPECIFICALLY RECOMMENDED BY THE MANUFACTURER FOR HEAT FUSED WELDING OF ALL SPLICES.
3. WELDS ARE TO EXHIBIT A CONTINUOUS BEAD OF EXCESS MELTED MATERIAL, FREE OF DEFECTS.
4. SPLICES ARE TO BE HEAT WELDED WITH THE CENTER BULB AND RIBS ALIGNED.
5. ADHESIVES, SOLVENTS, LAP JOINTS, AND EDGE WELDING ARE NOT ACCEPTABLE.
6. EMBEDDED WATERSTOPS MAY NOT BE WELDED OR JOINED TO OTHER WATERSTOPS OF DIFFERENT SIZE, CONFIGURATION, OR MATERIAL.

MISCELLANEOUS:

1. ALL DRAWINGS ARE OF EQUAL IMPORTANCE IN DEFINING THE WORK OF THE CONTRACT DOCUMENTS. CONTRACTOR SHALL CAREFULLY REVIEW AND COMPARE ALL DRAWINGS DURING THE BIDDING PERIOD AND BEFORE INSTALLATION OF THEIR WORK. ANY INCONSISTENCIES IN THE DRAWINGS SHALL BE REPORTED PROMPTLY TO THE ENGINEER FOR CLARIFICATION.
2. EVERY EFFORT HAS BEEN MADE TO PROVIDE TO SCALE DRAWINGS (WHEN PLOTTED AT 11X17); HOWEVER, THE DRAWINGS ARE NOT NECESSARILY TO SCALE -USE GIVEN DIMENSIONS.

CONTACT INFORMATION:

CIVIL ENGINEER:

RESOURCE ENGINEERING ASSOCIATES, INC.
3510 PARMENTER STREET, SUITE 100
MIDDLETON, WI 53562

CONTACT:
DAN WIERZBA - PROJECT MANAGER
608-831-5522 x14

STRUCTURAL ENGINEER:

MP-SQUARED STRUCTURAL ENGINEERS, LLC
583 D'ONOFRIO DRIVE, SUITE 201
MADISON, WI 53719

CONTACT:
MELISSA A. PEYTON, P.E.
608-821-4770

WISCONSIN MELISSA A. PEYTON E-[illegible] MADISON, WI PROFESSIONAL ENGINEER

1/21/2014

To the best of my professional knowledge, judgment and belief, this design and these construction plans meets NRCS standards 313 - Waste Storage Facility. (Date: 6/2013)

GOLDEN SANDS DAIRY
SAND SEPARATOR BUILDING
NEKOOSA, WI

(mp)² STRUCTURAL ENGINEERS, LLC
583 D'Onofrio Drive, Suite 201
Madison, WI 53719
Office: 608-821-4770
Fax: 608-821-4780

THE INFORMATION CONTAINED HEREIN IS OF A PROPRIETARY NATURE AND IS SUBMITTED IN CONFIDENCE FOR USE BY THE CLIENTS OF MP-SQUARED STRUCTURAL ENGINEERS, LLC. THIS DOCUMENT HAS BEEN PREPARED FOR -------- AND IS EXPRESSLY PROHIBITED TO BE USED FOR ANY OTHER PROJECT, PURPOSE, LOCATION, PUBLICATION, REPRODUCTION, PRODUCTION, DISTRIBUTION OR DISSEMINATION IN WHOLE OR IN PART, BY INDIVIDUAL OR ORGANIZATION, WITHOUT WRITTEN CONSENT OF MP-SQUARED STRUCTURAL ENGINEERS, LLC. RECEIPT OR POSSESION OF THIS INFORMATION CONFERS NO RIGHT OR LICENSE TO USE OR DISCLOSE TO OTHERS THE SUBJECT MATTER CONTAINED HEREIN FOR ANY USES BUT AUTHORIZED PURPOSES.

ISSUE

1	01-21-2014 FOR CONSTRUCTION

REVISIONS

MP2 JOB #: 1310190WI
CLIENT JOB #:
DRAWN BY: JSA
CHECKED BY:

SHEET CONTENTS
PROJECT NOTES

SHEET NUMBER

S0.1

PLAN NOTES

1. SEE SHEET S0.1 FOR ADDITIONAL NOTES.
2. CONTRACTOR SHALL DETERMINE PRIOR TO THE START OF CONSTRUCTION LOCATION OF ANY MODIFICATION TO PROPOSED CONSTRUCTION JOINT LAYOUT AND SUBMIT THIS INFORMATION IN WRITING FOR APPROVAL TO THE ENGINEER PRIOR TO START OF CONSTRUCTION. CONSTRUCTION JOINT MATERIALS SHALL BE ON HAND IN CASE OF NEED FOR UNEXPECTED CONSTRUCTION JOINT REQUIREMENTS.
3. SLAB SECTIONS SHALL BE CAST APPROXIMATELY SQUARE WITH A MAXIMUM ASPECT RATIO OF 1:1.5
4. ALL FLAT WORK CONCRETE SHALL BE COVERED IMMEDIATELY AND MAINTAINED CONTINUOUSLY WET FOR A MINIMUM OF 7 DAYS AFTER PLACING (PONDING METHOD). CURING SHEETS ARE TO BE USED AND REMAIN IN PLACE.
5. PROVIDE "FLAT TEE" WATERSTOP AT SLAB TO WALL JOINT LOCATIONS. WELD AND INSPECT ALL WATERSTOP JOINTS.
6. SEE NOTES SHEET S0.1 FOR WATERSTOP REQUIREMENTS.
7. PER WISCONSIN CONCRETE SPECIFICATION #4, SECTION 6, FORMS INCLUDING THIS KEYWAY FORM MUST REMAIN IN PLACE FOR A MINIMUM OF 24 HOURS AFTER CONCRETE PLACEMENT.
8. LAP HORIZONTAL SLAB AND WALL REINFORCEMENT PER GENERAL NOTES TABLE TYPICAL EXCEPT AT CONTROL AND EXPANSION JOINTS.
9. SEE SHEET S6.1 SHEET S6.1 DETAIL 1 FOR WATERSTOP INTERSECTION DETAILS.
10. SEE SHEET S6.1 DETAILS 2 & 3 FOR ADDED REINFORCING AT ROUND/RECT. OPENINGS.
11. SEE SHEET S6.1 DETAIL 4 FOR SLAB CONTROL/CONST. JOINTS.
12. SEE SHEET S6.1 DETAIL 5 FOR EXTERIOR WALL JOINTS.
13. SEE SHEET S6.1 DETAILS 6 & 7 FOR FTG. & WALL CORNER REINFORCING.
14. SEE SHEET S6.1 DETAIL 8 FOR FTG. STEP.
15. SEE SHEET S6.1 DETAIL 9 FOR HORIZ. REINFORCING LAPS.
16. SEE SHEET S6.1 DETAIL 10 FOR ADDED REINFORCING AT PIPE PENETRATIONS.
17. SEE SHEET S6.1 DETAIL 11 FOR ADDED REINFORCING AT REENTRANT CORNERS.
18. BUILDING SHELL CONSTRUCTION IS UNKNOWN AT THIS TIME. WE HAVE ASSUMED LIGHT FRAME TIMBER CONSTRUCTION. EXTERIOR FOOTING DESIGN WILL BE VERIFIED & INTERIOR COLUMN FTGS WILL BE DESIGNED & LOCATED AFTER BUILDING REACTIONS & COLUMN LAYOUT HAVE BEEN PROVIDED.

FOUNDATION LEGEND

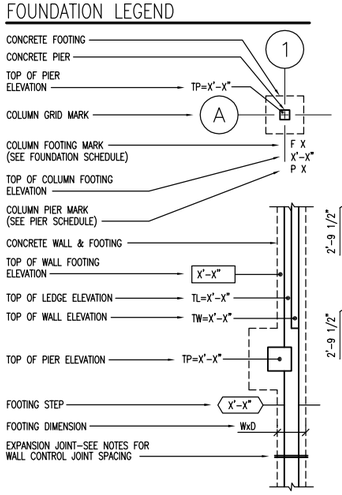

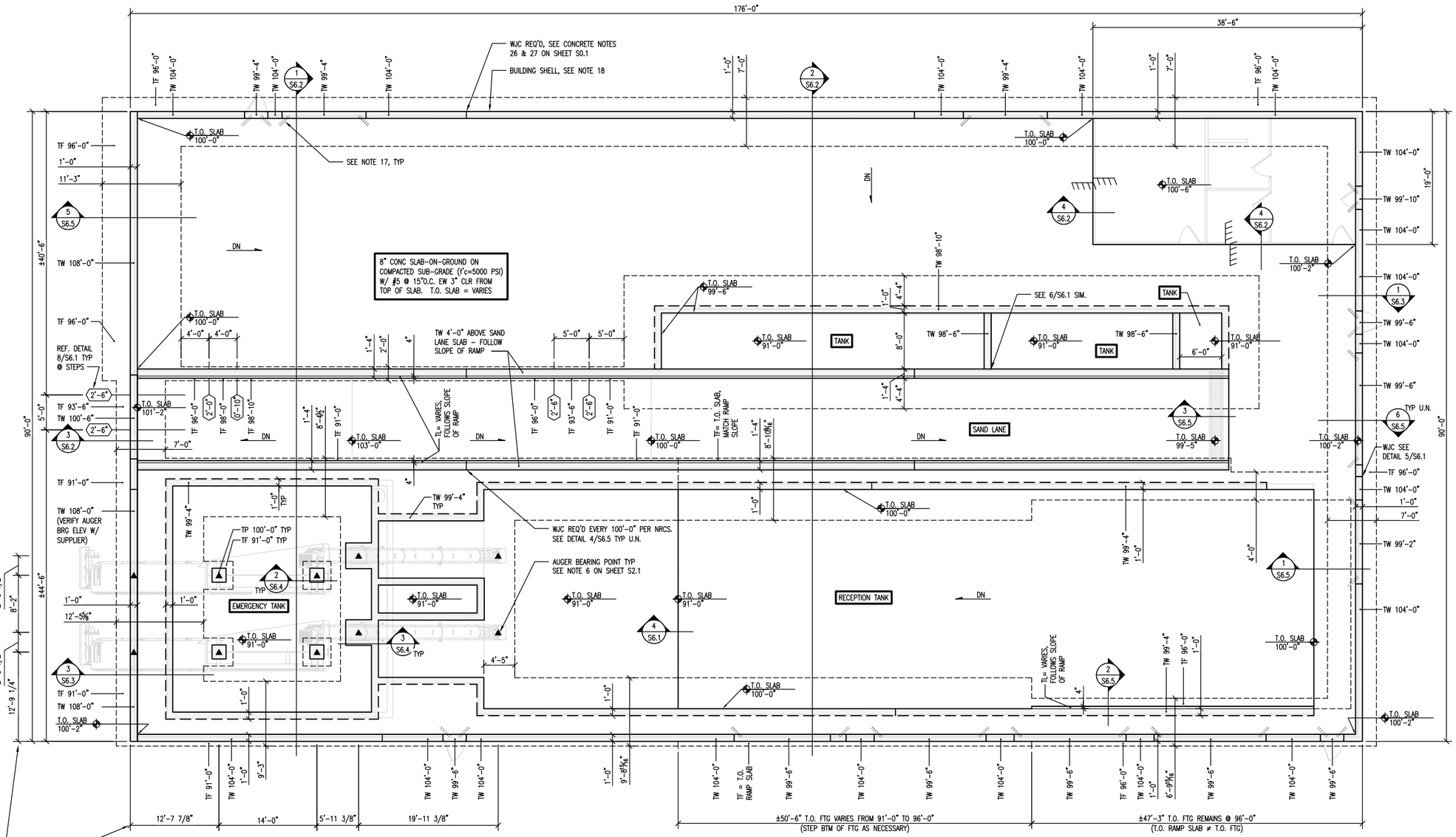

AUGER BEARING POINT DIMENSIONS TO BE VERIFIED BY AUGER/EQUIPMENT SUPPLIER

N

1 S1.1 FOUNDATION PLAN

SCALE: 1/8"=1'-0" (@22x34)
SCALE: 1/16"=1'-0" (@11x17)

WISCONSIN MELISSA A. PEYTON E-47013 MADISON, WI PROFESSIONAL ENGINEER
1/21/2014

GOLDEN SANDS DAIRY
SAND SEPARATOR BUILDING
NEKOOSA, WI

(mp)² STRUCTURAL ENGINEERS, LLC
583 D'Onofrio Drive, Suite 301
Madison, WI 53719
Office: 608-821-4770
Fax: 608-821-4780

THE INFORMATION CONTAINED HEREIN IS OF A PROPRIETARY NATURE AND IS SUBMITTED IN A CONFIDENCE FOR USE BY THE CLIENTS OF MP-SQUARED STRUCTURAL ENGINEERS, LLC. THIS DOCUMENT HAS BEEN PREPARED FOR THE PURPOSES AND PROJECT LISTED AND IS NOT TO BE USED FOR ANY OTHER PROJECT, PURPOSE, LOCATION. PUBLICATION, REPRODUCTION, PRODUCTION, DISTRIBUTION OR DISSEMINATION IN WHOLE OR IN PART, BY INDIVIDUAL OR ORGANIZATION, WITHOUT WRITTEN CONSENT OF MP-SQUARED STRUCTURAL ENGINEERS, LLC. RECEIPT OR POSSESSION OF THIS INFORMATION CONFERS NO RIGHT OR LICENSE TO USE OR DISCLOSE TO OTHERS THE SUBJECT MATTER CONTAINED HEREIN FOR ANY USES NOT AUTHORIZED PURPOSES.

ISSUE

1	01-21-2014 FOR CONSTRUCTION

REVISIONS

MP2 JOB #: 1310190WI
CLIENT JOB #:
DRAWN BY: JSA
CHECKED BY:

SHEET CONTENTS
FOUNDATION PLAN

SHEET NUMBER
S1.1

PLAN NOTES

1. SEE SHEET S0.1 FOR ADDITIONAL NOTES.
2. ALL STEEL FRAMING TO BE GALVANIZED.
3. T.O. STEEL = 99'-10¼".
4. T.O. GRATING = 100'-0".
5. LIVE LOAD = 100 PSF.
6. ▲ = AUGER/EQUIPMENT BEARING LOCATIONS. AUGER/EQUIPMENT SUPPLIER TO VERIFY LOCATIONS.

STRUCTURAL STEEL LEGEND

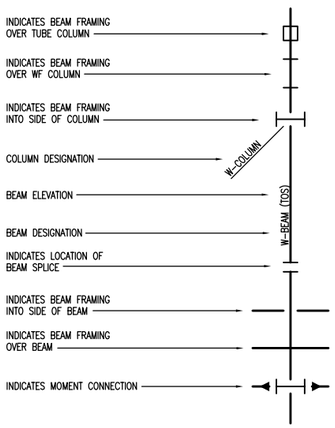

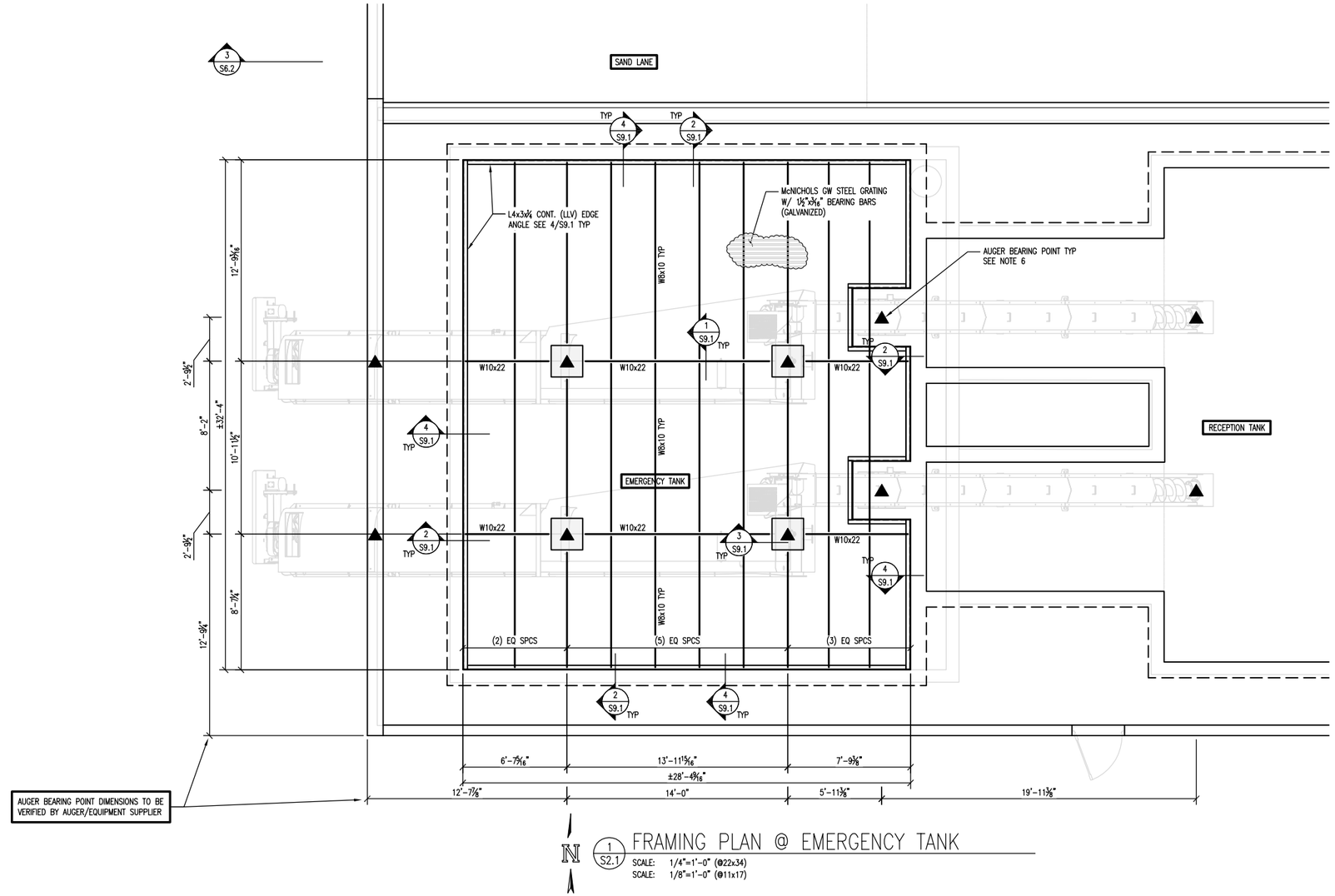

1 S2.1 FRAMING PLAN @ EMERGENCY TANK

SCALE: 1/4"=1'-0" (@22x34)
SCALE: 1/8"=1'-0" (@11x17)

GOLDEN SANDS DAIRY
SAND SEPARATOR BUILDING
NEKOOSA, WI

(mp)² STRUCTURAL ENGINEERS, LLC
583 D'Onofrio Drive, Suite 301
Madison, WI 53719
Office: 608-821-4770
Fax: 608-821-4780

THE INFORMATION CONTAINED HEREIN IS OF A PROPRIETARY NATURE AND IS SUBMITTED IN CONFIDENCE FOR USE BY THE CLIENTS OF MP²-STRUCTURAL ENGINEERS, LLC. THIS DOCUMENT HAS BEEN PREPARED FOR THE CLIENT FOR THE PURPOSE OF USED FOR ANY OTHER PROJECT, PURPOSE, LOCATION, PUBLICATION, REPRODUCTION, PRODUCTION, DISTRIBUTION OR DISSEMINATION IN WHOLE OR IN PART, BY INDIVIDUAL OR ORGANIZATION, WITHOUT WRITTEN CONSENT OF MP²-STRUCTURAL ENGINEERS, LLC. RECEIPT OR POSSESSION OF THIS INFORMATION CONFERS NO RIGHT OR LICENSE TO USE OR DISCLOSE TO OTHERS THE SUBJECT MATTER CONTAINED HEREIN FOR ANY USES BUT AUTHORIZED PURPOSES.

ISSUE

1	01-21-2014 FOR CONSTRUCTION

REVISIONS

MP2 JOB #: 1310190WI
CLIENT JOB #:
DRAWN BY: JSA
CHECKED BY:

SHEET CONTENTS
EMERGENCY TANK
FRAMING PLAN

SHEET NUMBER

S2.1

WISCONSIN MELISSA A. PEYTON E-28803 MADISON, WI PROFESSIONAL ENGINEER
1/21/2014

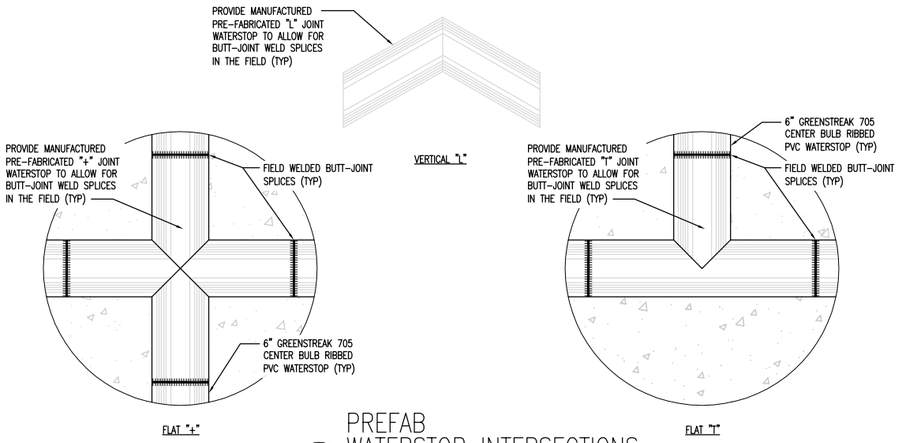

1 S6.1 PREFAB WATERSTOP INTERSECTIONS

SCALE: NTS

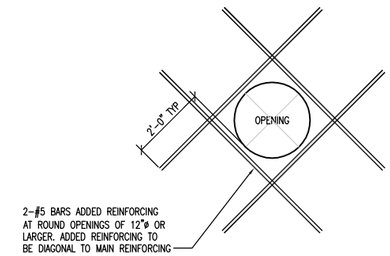

2 S6.1 ADDED REINFORCING AT ROUND OPENINGS

SCALE: NTS

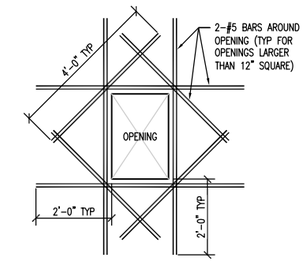

3 S6.1 ADDED REINFORCING AT RECTANGULAR OPENINGS

SCALE: NTS

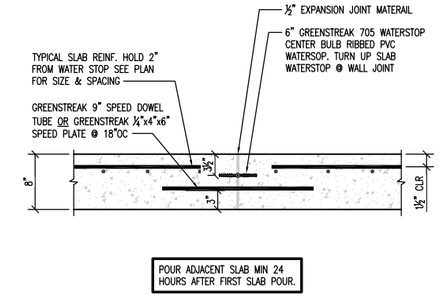

4 S6.1 SLAB CONTROL/CONSTRUCTION JOINT

SCALE: NTS

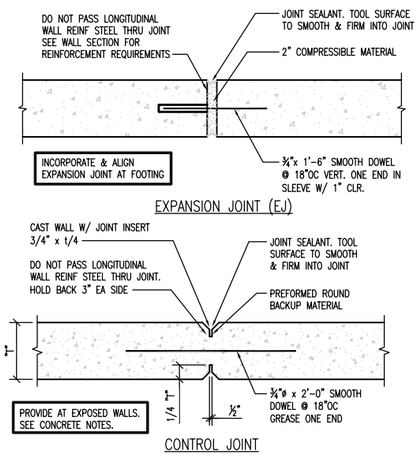

WALL REINFORCING NOT SHOWN. SEE SECTIONS (TYP.)

5 S6.1 WALL JOINTS

SCALE: 3/4"=1'-0"

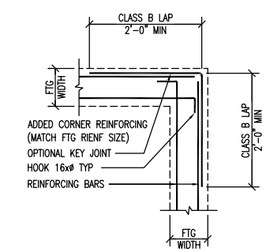

6 S6.1 FOOTING CORNER REINFORCING

SCALE: NTS

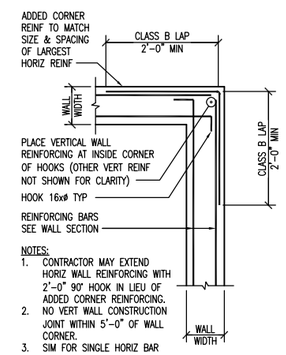

7 S6.1 WALL CORNER REINFORCING

SCALE: NTS

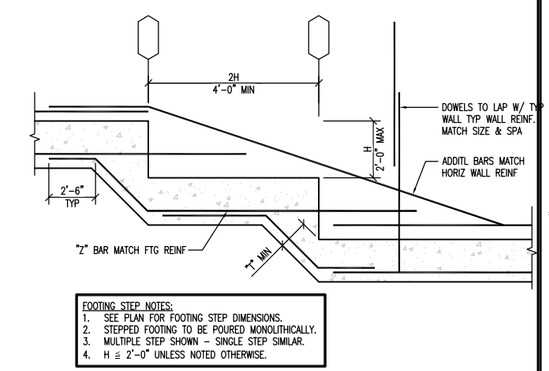

8 S6.1 FOOTING STEP DETAIL

SCALE: NTS

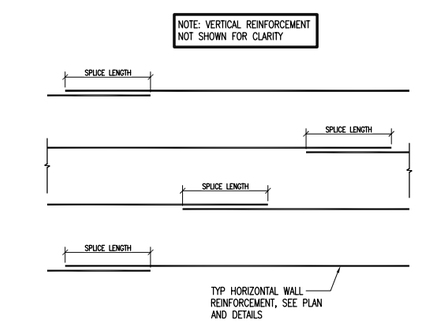

9 S6.1 TYPICAL HORIZONTAL REINFORCEMENT LAP DETAIL

SCALE: NTS

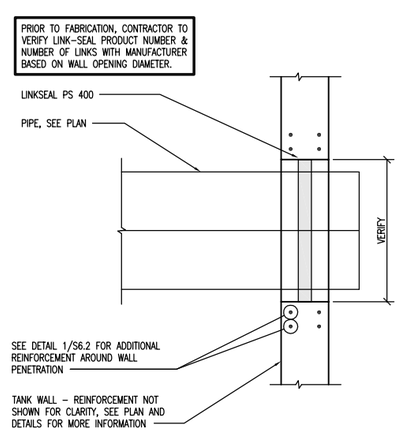

10 S6.1 PIPE PENETRATION DETAIL

SCALE: NTS

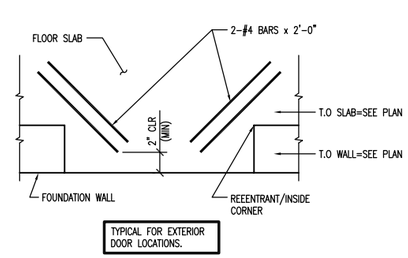

11 S6.1 SLAB REINF AT REENTRANT CORNERS W/O CONTROL JTS

SCALE: 3/4"=1'-0"

GOLDEN SANDS DAIRY
SAND SEPARATOR BUILDING
NEKOOSA, WI

(mp)² STRUCTURAL ENGINEERS, LLC
583 D'Onofrio Drive, Suite 201
Madison, WI 53719
Office: 608-821-4770
Fax: 608-821-4780

THE INFORMATION CONTAINED HEREIN IS OF A PROPRIETARY NATURE AND IS SUBMITTED IN CONFIDENCE FOR USE BY THE CLIENTS OF MP²-SQUARED STRUCTURAL ENGINEERS, LLC. THIS DOCUMENT HAS BEEN PREPARED FOR THE PURPOSES OF THIS PROJECT ONLY. USES FOR ANY OTHER PROJECT, PURPOSE, LOCATION, PUBLICATION, REPRODUCTION, PRODUCTION, DISTRIBUTION OR DISSEMINATION IN WHOLE OR IN PART, BY INDIVIDUAL OR ORGANIZATION, WITHOUT WRITTEN CONSENT OF MP²-SQUARED STRUCTURAL ENGINEERS, LLC. RECEIPT OR POSSESSION OF THIS INFORMATION CONFERS NO RIGHT OR LICENSE TO USE OR DISCLOSE TO OTHERS THE SUBJECT MATTER CONTAINED HEREIN FOR ANY USES BUT AUTHORIZED PURPOSES.

ISSUE

1	01-21-2014 FOR CONSTRUCTION

REVISIONS

MP2 JOB #: 1310190WI
CLIENT JOB #:
DRAWN BY: JSA
CHECKED BY:

SHEET CONTENTS
FOUNDATION DETAILS

SHEET NUMBER
S6.1

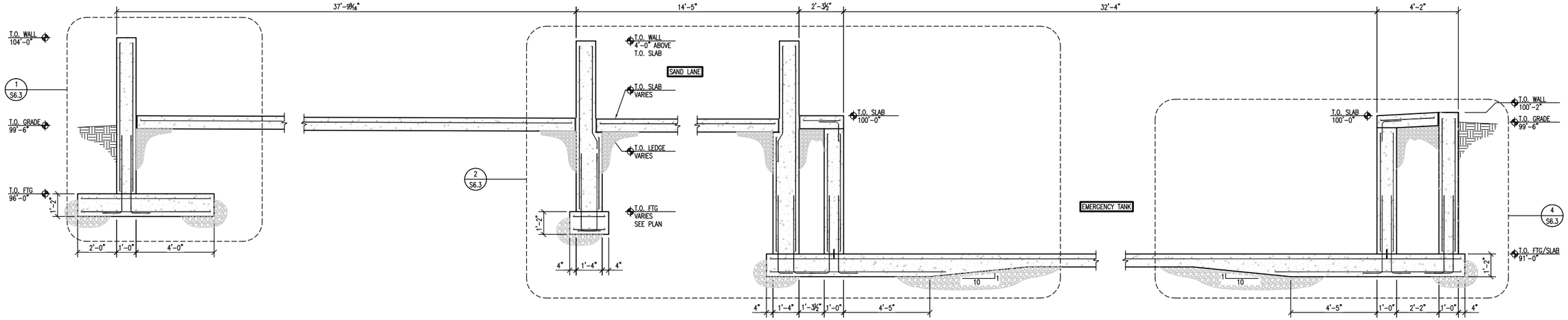

1 S6.2 BLDG FOUNDATION SECTION

SCALE: 3/8"=1'-0" (@22x34)
SCALE: 3/16"=1'-0" (@11x17)

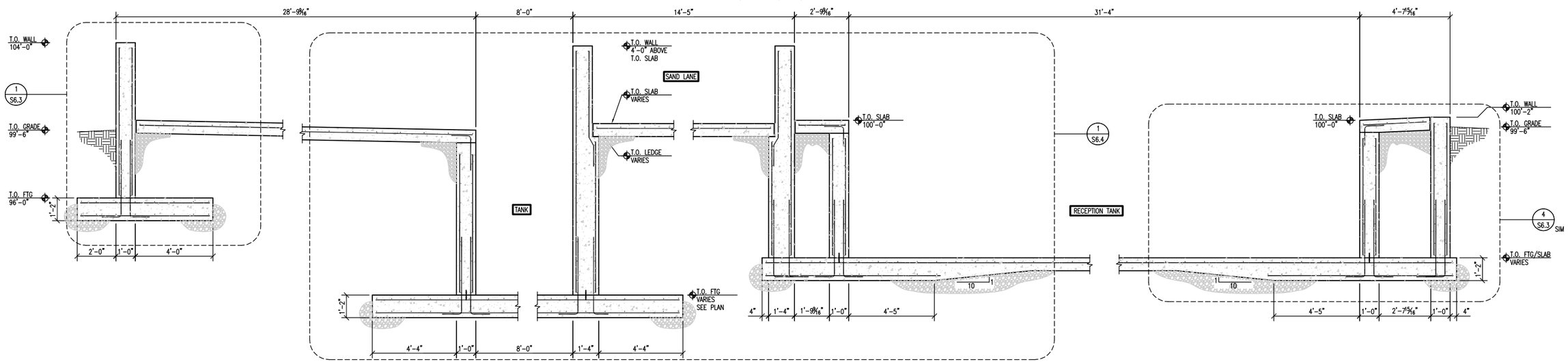

2 S6.2 BLDG FOUNDATION SECTION

SCALE: 3/8"=1'-0" (@22x34)
SCALE: 3/16"=1'-0" (@11x17)

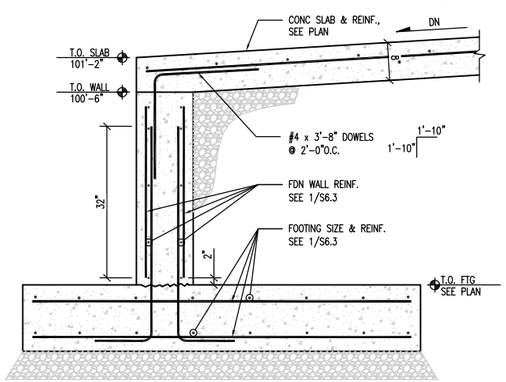

3 S6.2 SECTION AT SAND LANE OHD

SCALE: 3/4"=1'-0" (@22x34)
SCALE: 3/8"=1'-0" (@11x17)

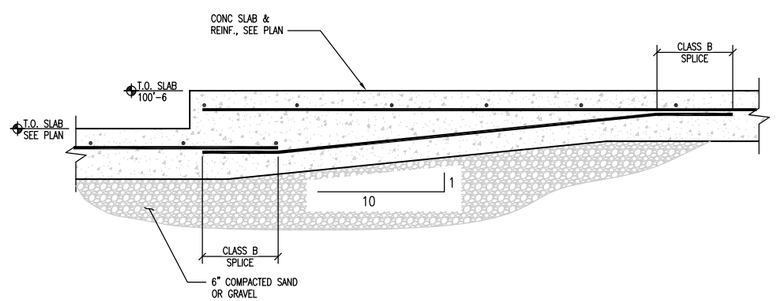

4 S6.2 FLOOR SLAB ELEV. TRANSITION

SCALE: 1"=1'-0" (@22x34)
SCALE: 1/2"=1'-0" (@11x17)

GOLDEN SANDS DAIRY
SAND SEPARATOR BUILDING
NEKOOSA, WI

(mp)² STRUCTURAL ENGINEERS, LLC
583 D'Onofrio Drive, Suite 201
Madison, WI 53719
Office: 608-821-4770
Fax: 608-821-4780

THE INFORMATION CONTAINED HEREIN IS OF A PROPRIETARY NATURE AND IS SUBMITTED IN CONFIDENCE FOR USE BY THE CLIENTS OF MP²-SQUARED STRUCTURAL ENGINEERS, LLC. THIS DOCUMENT HAS BEEN PREPARED FOR THE PARTICIPANTS OF THIS PROJECT. IT IS NOT TO BE USED FOR ANY OTHER PROJECT, PURPOSE, LOCATION, PUBLICATION, REPRODUCTION, PRODUCTION, DISTRIBUTION OR DISSEMINATION IN WHOLE OR IN PART, BY INDIVIDUAL OR ORGANIZATION, WITHOUT WRITTEN CONSENT OF MP²-SQUARED STRUCTURAL ENGINEERS, LLC. RECEIPT OR POSSESSION OF THIS INFORMATION CONFERS NO RIGHT OR LICENSE TO USE OR DISCLOSE TO OTHERS THE SUBJECT MATTER CONTAINED HEREIN FOR ANY USES BUT AUTHORIZED PURPOSES.

ISSUE

1	01-21-2014 FOR CONSTRUCTION

REVISIONS

MP2 JOB #: 1310190WI
CLIENT JOB #:
DRAWN BY: JSA
CHECKED BY:

SHEET CONTENTS
FOUNDATION DETAILS

SHEET NUMBER

S6.2

WISCONSIN MELISSA A. PEYTON E-18833 MADISON, WI PROFESSIONAL ENGINEER
1/21/2014

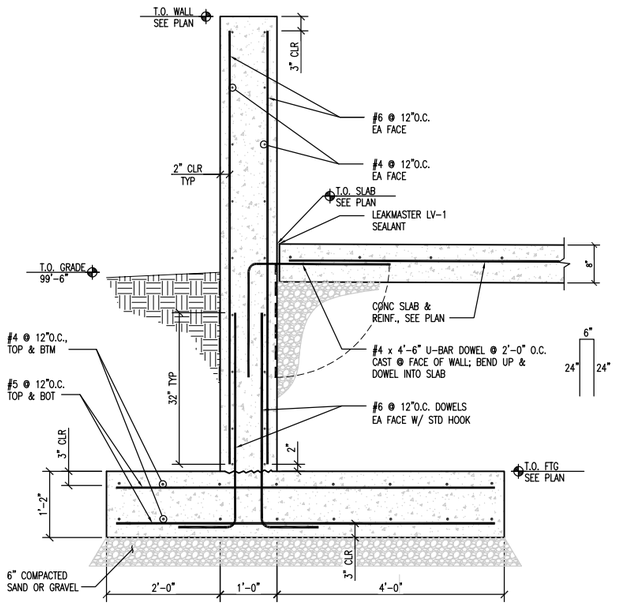

SECTION AT NORTH & EAST RETAINING WALL

1 / S6.3

SCALE: 3/4"=1'-0" (@22x34)
SCALE: 3/8"=1'-0" (@11x17)

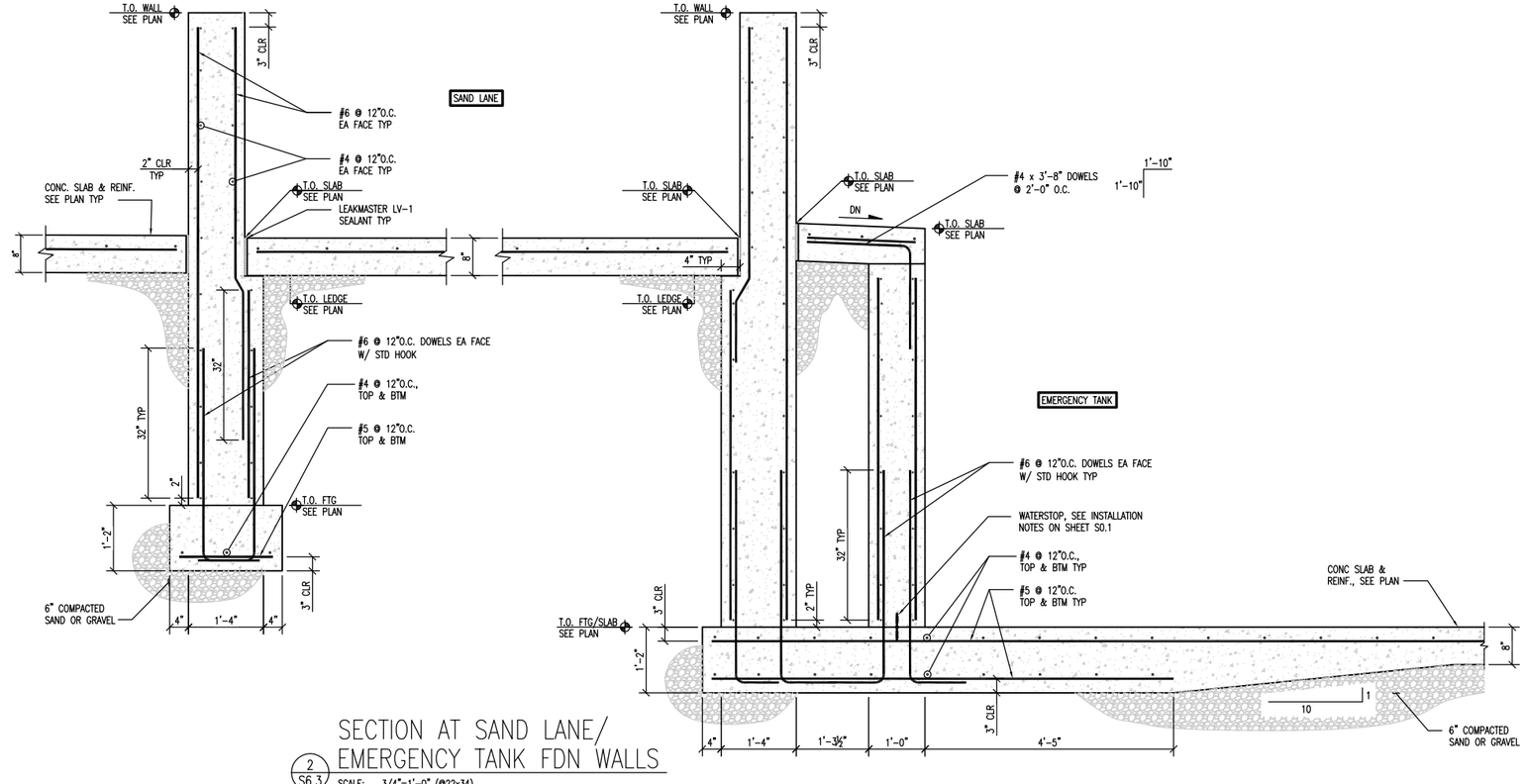

SECTION AT SAND LANE/ EMERGENCY TANK FDN WALLS

2 / S6.3

SCALE: 3/4"=1'-0" (@22x34)
SCALE: 3/8"=1'-0" (@11x17)

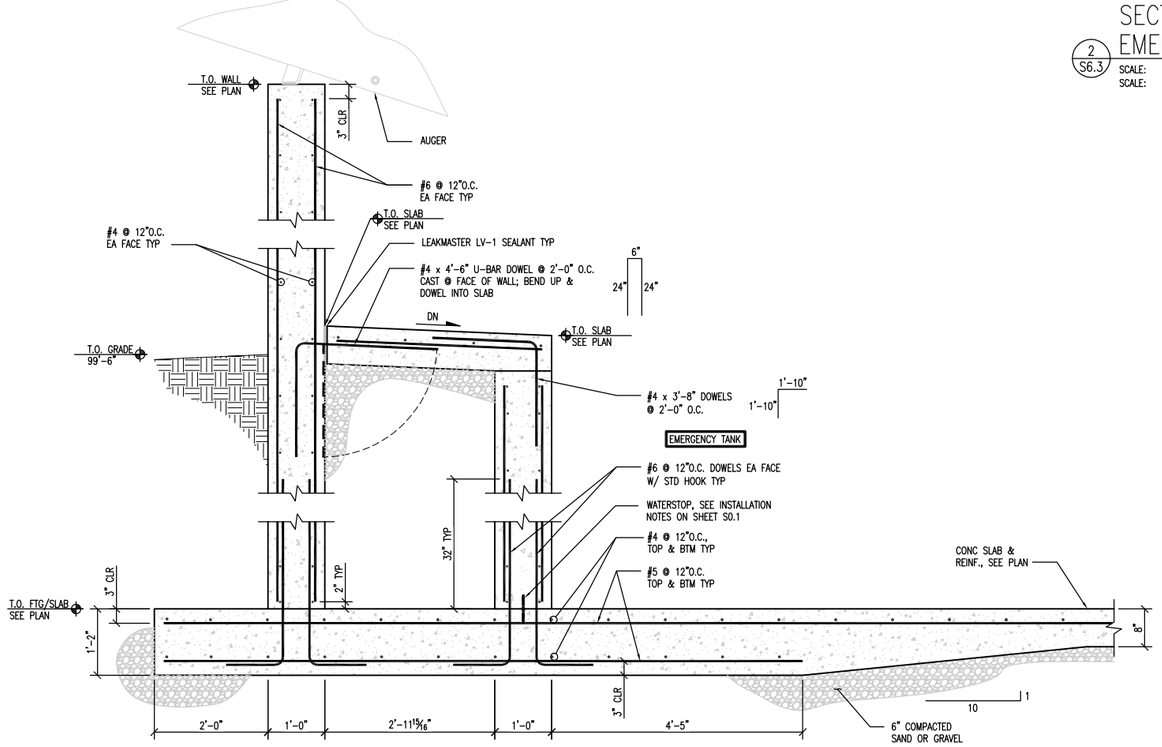

SECTION AT EXT. WALL SUPPORTING AUGERS

3 / S6.3

SCALE: 3/4"=1'-0" (@22x34)
SCALE: 3/8"=1'-0" (@11x17)

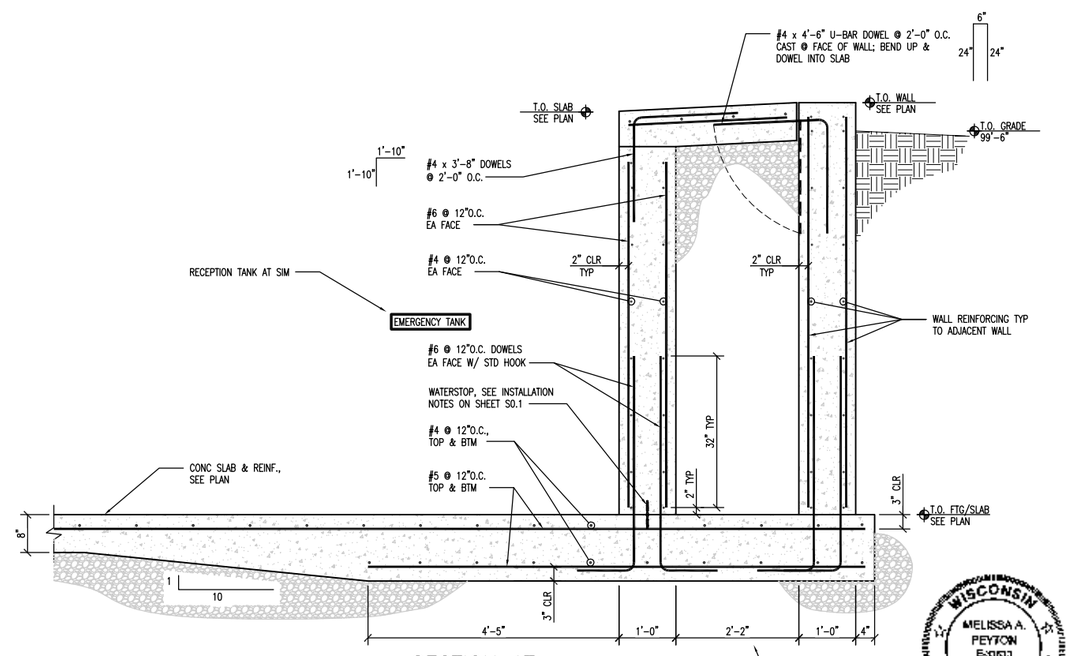

SECTION AT SOUTH EXT. WALL

4 / S6.3

SCALE: 3/4"=1'-0" (@22x34)
SCALE: 3/8"=1'-0" (@11x17)

WISCONSIN
MELISSA A. PEYTON
E-17317
MADISON, WI
PROFESSIONAL ENGINEER
1/21/2014

GOLDEN SANDS DAIRY

SAND SEPARATOR BUILDING
NEKOOSA, WI

(mp)² STRUCTURAL ENGINEERS, LLC
583 D'Onofrio Drive, Suite 201
Madison, WI 53719
Office: 608-821-4770
Fax: 608-821-4780

THE INFORMATION CONTAINED HEREIN IS OF A PROPRIETARY NATURE AND IS SUBMITTED IN CONFIDENCE FOR USE BY THE CLIENTS OF MP²-SQUARED STRUCTURAL ENGINEERS, LLC. THIS DOCUMENT HAS BEEN PREPARED FOR THE PURPOSES OF THIS PROJECT AND IS NOT TO BE USED FOR ANY OTHER PROJECTS, PURPOSE, LOCATION, PUBLICATION, REPRODUCTION, PRODUCTION, DISTRIBUTION OR DISSEMINATION IN WHOLE OR IN PART, BY INDIVIDUAL OR ORGANIZATION, WITHOUT WRITTEN CONSENT OF MP²-SQUARED STRUCTURAL ENGINEERS, LLC. RECEIPT OR POSSESSION OF THIS INFORMATION CONFERS NO RIGHT OR LICENSE TO USE OR DISCLOSE TO OTHERS THE SUBJECT MATTER CONTAINED HEREIN FOR ANY USES BUT AUTHORIZED PURPOSES.

ISSUE

1	01-21-2014 FOR CONSTRUCTION

REVISIONS

MP2 JOB #: 1310190WI
CLIENT JOB #:
DRAWN BY: JSA
CHECKED BY:

SHEET CONTENTS
FOUNDATION DETAILS

SHEET NUMBER

S6.3

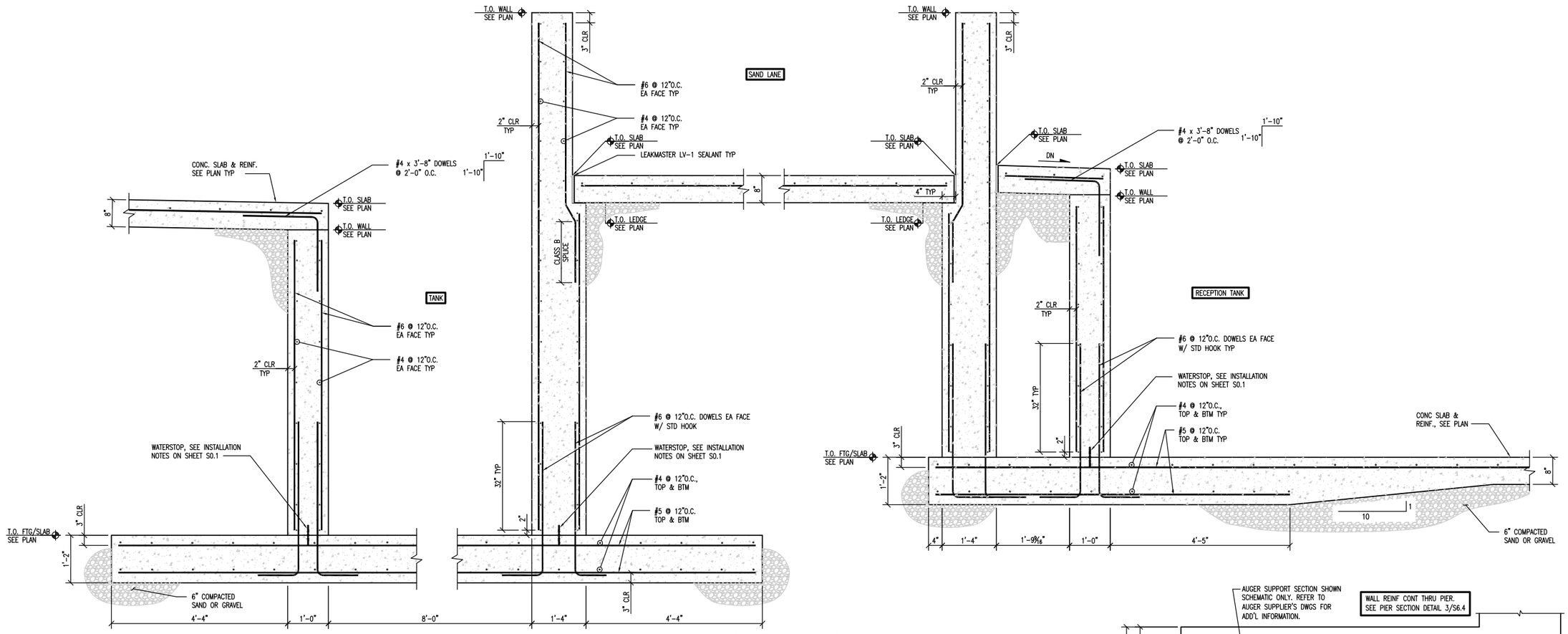

1 S6.4 SECTION AT TANK, SAND LANE & RECEPTION TANK FDN WALLS

SCALE: 3/4"=1'-0" (@22x34)
SCALE: 3/8"=1'-0" (@11x17)

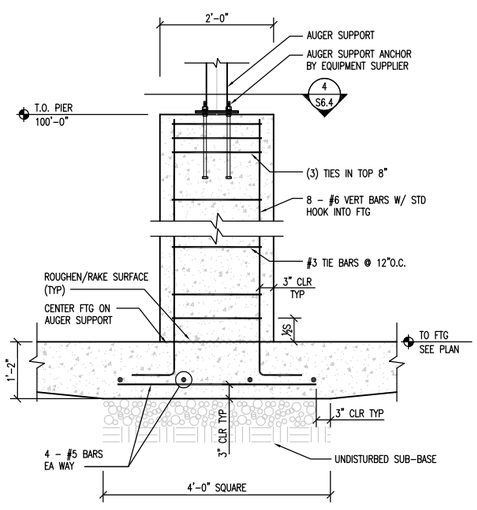

2 S6.4 PIER SECTION

SCALE: NTS

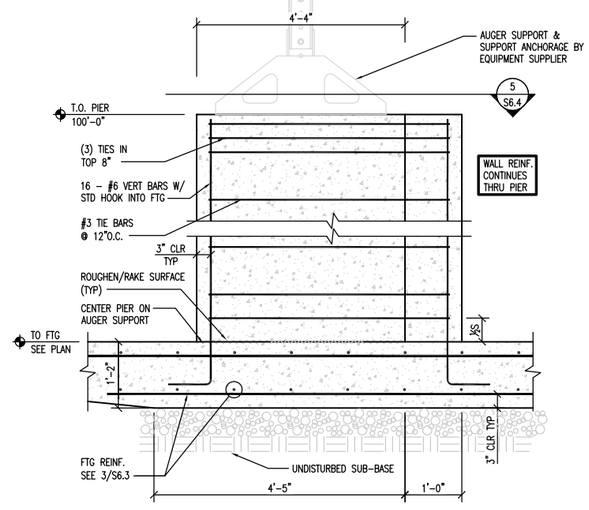

3 S6.4 PIER SECTION

SCALE: NTS

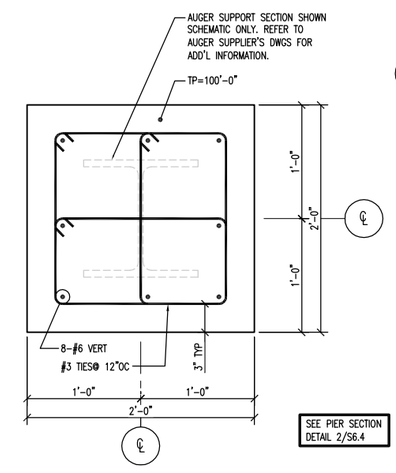

4 S6.4 P1 – PLAN VIEW

SCALE: NTS

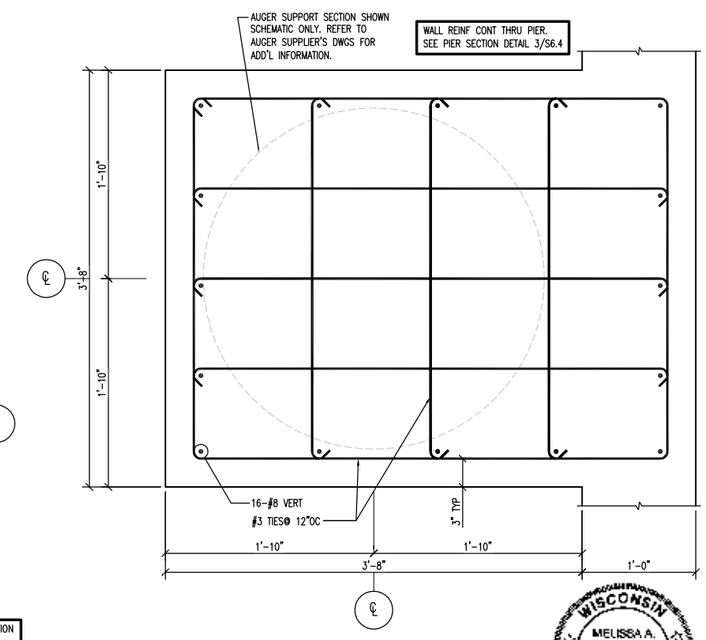

5 S6.4 P2 – PLAN VIEW

SCALE: NTS

WISCONSIN MELISSA A. PEYTON E-47413 MADISON, WI PROFESSIONAL ENGINEER
1/21/2014

GOLDEN SANDS DAIRY

SAND SEPARATOR BUILDING
NEKOOSA, WI

(mp)² STRUCTURAL ENGINEERS, LLC
583 D'Onofrio Drive, Suite 201
Madison, WI 53719
Office: 608-821-4770
Fax: 608-821-4780

THE INFORMATION CONTAINED HEREIN IS OF A PROPRIETARY NATURE AND IS SUBMITTED IN CONFIDENCE FOR USE BY THE CLIENTS OF MP²-SQUARED STRUCTURAL ENGINEERS, LLC. THIS DOCUMENT HAS BEEN PREPARED FOR THE PURPOSES AND PARTIES SPECIFIED. IT IS NOT INTENDED OR SUITABLE FOR ANY OTHER PROJECT, PURPOSE, LOCATION, PUBLICATION, REPRODUCTION, PRODUCTION, DISTRIBUTION OR DISSEMINATION IN WHOLE OR IN PART, BY INDIVIDUAL OR ORGANIZATION, WITHOUT WRITTEN CONSENT OF MP²-SQUARED STRUCTURAL ENGINEERS, LLC. RECEIPT OR POSSESSION OF THIS INFORMATION CONFERS NO RIGHT OR LICENSE TO USE OR DISCLOSE TO OTHERS THE SUBJECT MATTER CONTAINED HEREIN FOR ANY USES BUT AUTHORIZED PURPOSES.

ISSUE

1	01-21-2014	FOR CONSTRUCTION

REVISIONS

MP2 JOB #: 1310190WI
CLIENT JOB #:
DRAWN BY: JSA
CHECKED BY:

SHEET CONTENTS
FOUNDATION DETAILS

SHEET NUMBER
S6.4

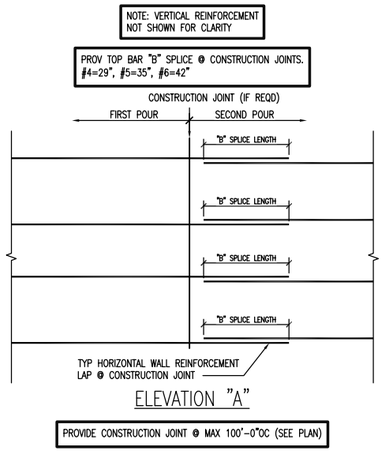

ELEVATION "A"

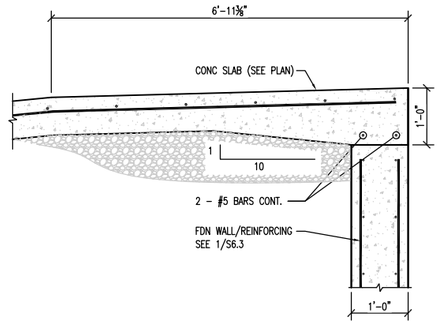

1 S6.5 RAMP SLAB EDGE @ 12" FOUNDATION WALL

SCALE: 3/4"=1'-0" (@22x34)
SCALE: 3/8"=1'-0" (@11x17)

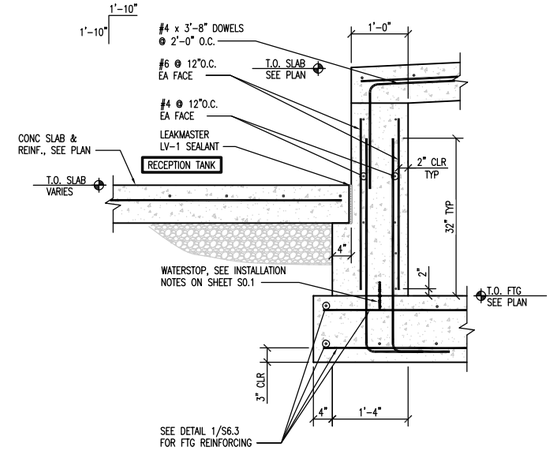

2 S6.5 SECTION AT RECEPTION TANK SLOPED RAMP

SCALE: 3/4"=1'-0" (@22x34)
SCALE: 3/8"=1'-0" (@11x17)

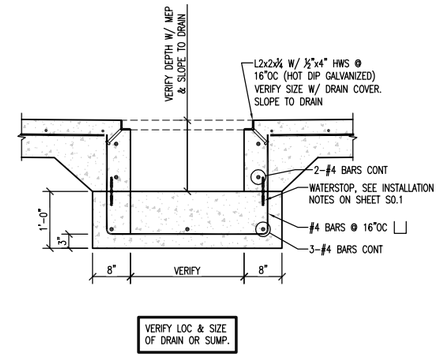

3 S6.5 TRENCH DRAIN DETAIL

SCALE: 3/4"=1'-0" (@22x34)
SCALE: 3/8"=1'-0" (@11x17)

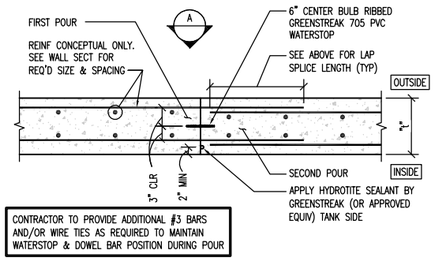

DOUBLE LAYER OF STEEL

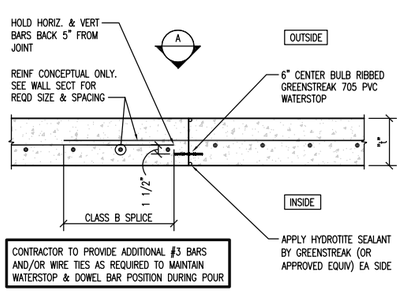

SINGLE LAYER OF STEEL

4 S6.5 WALL CONSTRUCTION JOINT

SCALE: NTS

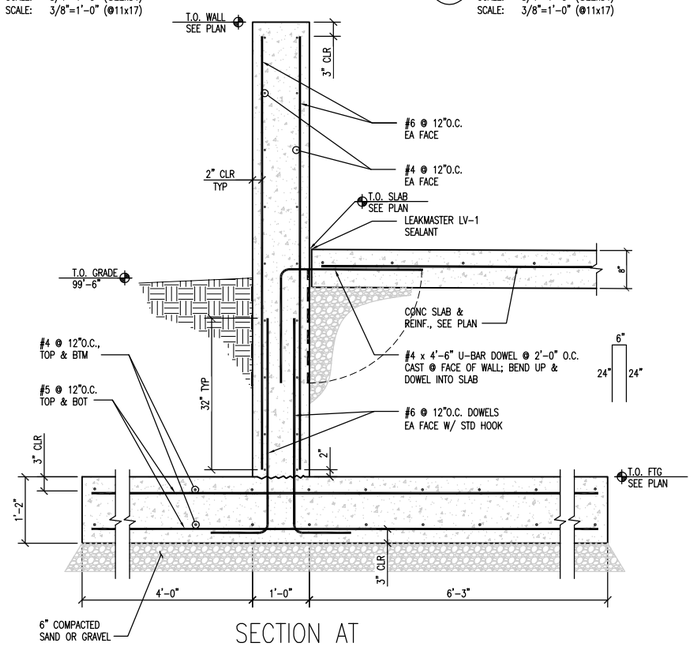

5 S6.5 SECTION AT WEST PUSH WALL

SCALE: 3/4"=1'-0" (@22x34)
SCALE: 3/8"=1'-0" (@11x17)

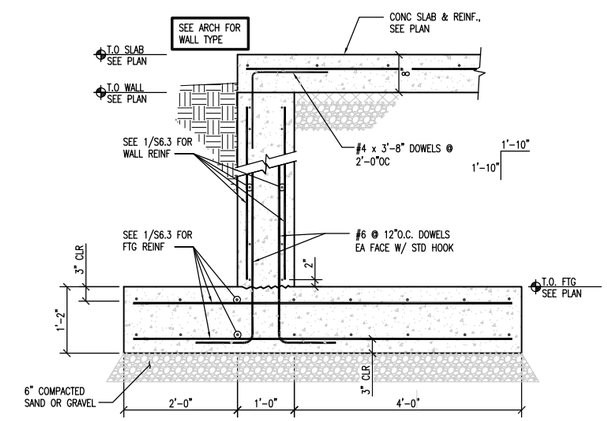

6 S6.5 OH DOOR THRESHOLD

SCALE: 3/4"=1'-0" (@22x34)
SCALE: 3/8"=1'-0" (@11x17)

GOLDEN SANDS DAIRY
SAND SEPARATOR BUILDING
NEKOOSA, WI

(mp)² STRUCTURAL ENGINEERS, LLC
583 D'Onofrio Drive, Suite 201
Madison, WI 53719
Office: 608-821-4770
Fax: 608-821-4780

THE INFORMATION CONTAINED HEREIN IS OF A PROPRIETARY NATURE AND IS SUBMITTED IN CONFIDENCE FOR USE BY THE CLIENTS OF MP²-EQUIPED STRUCTURAL ENGINEERS, LLC. THIS DOCUMENT HAS BEEN PREPARED FOR THE PURPOSES OF THE PROJECT NAMED. IT IS NOT TO BE USED FOR ANY OTHER PROJECT, PURPOSE, LOCATION, PUBLICATION, REPRODUCTION, REVOLUTION, DISTRIBUTION OR DISSEMINATION IN WHOLE OR IN PART, BY INDIVIDUAL OR ORGANIZATION, WITHOUT WRITTEN CONSENT OF MP²-EQUIPED STRUCTURAL ENGINEERS, LLC. RECEIPT OR POSSESSION OF THIS INFORMATION DOES NOT CONFER OR TRANSFER ANY RIGHT OF DISCLOSE TO OTHERS THE SUBJECT MATTER CONTAINED HEREIN FOR ANY USES BUT AUTHORIZED PURPOSES.

ISSUE

1	01-21-2014 FOR CONSTRUCTION

REVISIONS

MP2 JOB #: 1310190WI
CLIENT JOB #:
DRAWN BY: JSA
CHECKED BY:

SHEET CONTENTS
FOUNDATION DETAILS

SHEET NUMBER
S6.5

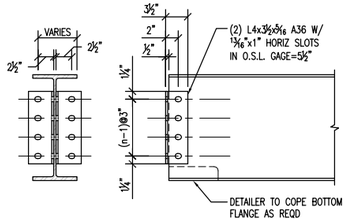

DOUBLE ANGLE CONNECTION (BOLT-BOLT)	
ROWS OF 3/4"ø A325N BOLTS (n)	NOMINAL BEAM DEPTH
2	W8 – W10
3	W12 – W14
4	W16 – W18
5	W21 – W24
6	W27 – W30
7	W33 – W36

1 S9.1 BEAM TO BEAM DOUBLE ANGLE CONNECTION

SCALE: NTS

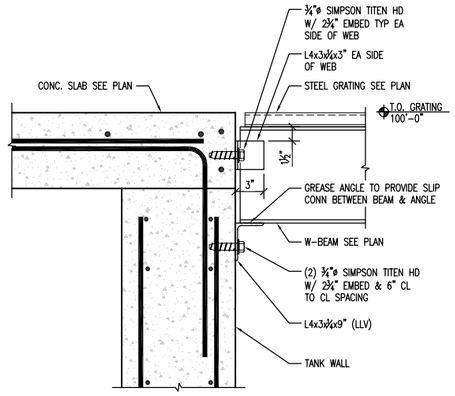

2 S9.1 W-BEAM TO TANK WALL

SCALE: NTS

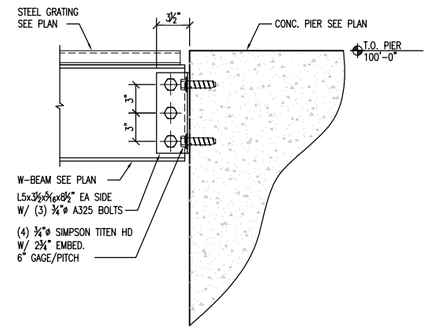

3 S9.1 W-BEAM TO PIER

SCALE: NTS

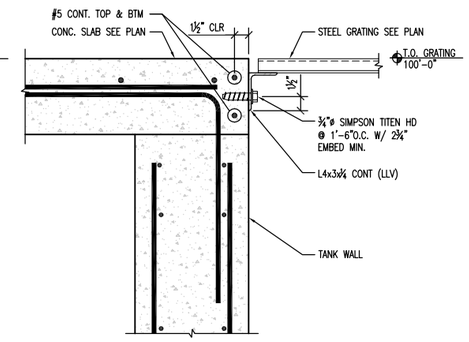

4 S9.1 GRATING EDGE ANGLE

SCALE: NTS

GOLDEN SANDS DAIRY
SAND SEPARATOR BUILDING
NEKOOSA, WI

(mp)² STRUCTURAL ENGINEERS, LLC
583 D'Onofrio Drive, Suite 201
Madison, WI 53719
Office: 608-821-4770
Fax: 608-821-4780

THE INFORMATION CONTAINED HEREIN IS OF A PROPRIETARY NATURE AND IS SUBMITTED IN CONFIDENCE FOR USE BY THE CLIENTS OF MP-SQUARED STRUCTURAL ENGINEERS, LLC. THIS DOCUMENT HAS BEEN PREPARED FOR THE PURPOSES OF THIS PROJECT ONLY. USES FOR ANY OTHER PROJECT, PURPOSE, LOCATION, PUBLICATION, REPRODUCTION, PRODUCTION, DISTRIBUTION OR DISSEMINATION IN WHOLE OR IN PART, BY INDIVIDUAL OR ORGANIZATION, WITHOUT WRITTEN CONSENT OF MP-SQUARED STRUCTURAL ENGINEERS, LLC. RECEIPT OR POSSESSION OF THIS INFORMATION CONFERS NO RIGHT OR LICENSE TO USE OR DISCLOSE TO OTHERS THE SUBJECT MATTER CONTAINED HEREIN FOR ANY USES BUT AUTHORIZED PURPOSES.

ISSUE

1	01-21-2014 FOR CONSTRUCTION

REVISIONS

MP2 JOB #: 1310190WI
CLIENT JOB #:
DRAWN BY: JSA
CHECKED BY:

SHEET CONTENTS

STEEL FRAMING DETAILS

SHEET NUMBER

S9.1

WISCONSIN MELISSA A. PEYTON E-28803 MADISON, WI PROFESSIONAL ENGINEER

1/21/2014