Form 1100-001
(R 9/07)

NATURAL RESOURCES BOARD AGENDA ITEM

Item No. 3.A.3

SUBJECT: Request authorization for public hearings for Board Order DG-19-09 Repealing and Recreating Chapters NR 809 and NR 811; and Creation of NR 810 all pertaining to public drinking water systems.

FOR: AUGUST 2009 **BOARD MEETING**

TO BE PRESENTED BY: Lee Boushon, Chief - Public Water Supply Section

SUMMARY:

The Safe Drinking Water Act (SDWA) is a federal rule promulgated by the United States Environmental Protection Agency to regulate the drinking water quality of public water systems. Public water systems are facilities providing water to 25 or more people at least 60 days of the year and include schools, restaurants, parks, subdivisions, manufactured housing communities, and cities. In order to maintain primacy for implementing the SDWA, Wisconsin must adopt rules that are at least as stringent as the federal rules.

The rule revisions were triggered by a series of revisons to the SDWA including the Groundwater Rule, the Stage 2 Disinfection Byproduct Rule, the Long Term 2 Enhanced Surface Water Treatment Rule and the Short Term Revisions to the Lead and Copper Rule. As part of the revisions to state rules, requirements were updated and clarified, disinfection of water provided by municipal systems using groundwater was required (stricter than federal law), the existing rules were restructured, and a new administrative rule was created.

Interested stakeholders were involved in a series of drafting discussions beginning in July of 2007 and concluding in February of 2009. The participating stakeholders included the Department of Commerce, water utilities, consulting engineers, Wisconsin Water Association, Wisconsin Rural Water Association, and the Municipal Environmental Group. The stakeholders were unanimously supportive of the process and opportunity to provide input and generally supportive of the proposed rules. Two potential areas of conflict were identified. The first involves an existing requirement for municipal water systems to implement a cross connection control program. The second involves a new requirement for municipal water systems using groundwater to continuously disinfect the water prior to the distribution system.

RECOMMENDATION: That the Board authorize the Department to hold hearings on Order DG-19-09

LIST OF ATTACHED MATERIALS:

No	☐	Fiscal Estimate Required	Yes	☑	Attached
No	☑	Environmental Assessment or Impact Statement Required	Yes	☐	Attached
No	☐	Background Memo	Yes	☑	Attached

APPROVED:

/s/ — 6/17/09
Bureau Director, Jill Jonas — Date

/s/ — 7/03/09
Administrator, Todd Ambs — Date

/s/ — 7/14/09
Secretary, Matt Frank — Date

cc: Laurie J. Ross - AD/8
Jill Jonas - DG/5
Judy Ohm - LS/8

CORRESPONDENCE/MEMORANDUM

State of Wisconsin

DATE: 07/13/2009 FILE REF: DG-19-09

TO: Natural Resources Board Members

FROM: Matt Frank, Secretary

SUBJECT: Background Memo on Public Hearing Authorization for Order DG-19-09, Pertaining to Repealing and Recreating ch. NR 809 – Safe Drinking Water, Repealing and Recreating ch. NR 811 – Design Requirements for Community Water Systems and Creating ch. NR 810 – Requirements for the Operation and Maintenance of Public Water Systems.

Why are these rule modifications being proposed?

Changes to the federal Safe Drinking Water Act requirements have necessitated revisions to the department's rules as part of maintaining state primacy for implementing the Safe Drinking Water Act. The revisions are related to the Stage 2 Disinfection Byproduct Rule, the Long Term 2 Enhanced Surface Water Treatment Rule, the Groundwater Rule and Short Term Revisions to the Lead and Copper Rule. In addition, the design requirements in ch. NR 811 are being updated to incorporate additional treatment technologies and to reflect changes in standard practice since the last revision in 1992. Lastly, ch. NR 810 is being created to reflect the federal rule reliance on treatment techniques and to improve the usability of the drinking water codes by structuring the codes along the lines of the major user groups – designers, samplers, and operators.

What events triggered the proposal?

The proposal was triggered by changes in the federal Safe Drinking Water Act. The Stage 2 Disinfection Byproduct Rule was promulgated on 1/04/2006 and revises the monitoring locations and compliance calculation methods for disinfection byproducts. The Long Term 2 Enhanced Surface Water Treatment Rule was promulgated on 1/05/2006 and requires increased source water monitoring with new treatment levels associated with the monitoring results. The Groundwater Rule was promulgated on 11/08/2006 and requires that water systems initiate new monitoring and correct significant deficiencies identified during department inspections in order to protect consumers from fecal contamination. The Short Term Revisions to the Lead and Copper Rule were promulgated on 10/10/2007 and revise the monitoring, reporting and public notification requirements related to lead and copper.

What issues are being addressed by these rules?

Adoption of federal requirements. The adoption of the federal Groundwater Rule requires modifications to ch. NR 809 and ch. NR 811 and new rules contained in NR 810. The adoption of the federal Stage 2 Disinfection Byproduct (DBP) Rule and Long Term 2 Enhanced Surface Water Treatment Rule requires modifications to ch. NR 809 (including a section on early implementation of the Stage 2 DBP Rule conducted by US EPA called Initial Distribution System Evaluations) and new rules contained in ch. NR 810. The adoption of the Short Term Revisions to the Lead and Copper Rule requires modifications to ch. NR 809.

Printed on Recycled Paper

Enhancement of federal requirements. Current research conducted at municipal water systems in Wisconsin as part of the Wisconsin Water and Health Trial for Enteric Risk (WAHTER) study (Mark Borchardt, PhD, Marshfield Clinic Research Foundation) raises questions about the effectiveness of the federal Groundwater Rule in reducing illness attributed to viruses in drinking water at public water systems served by groundwater. The research indicates that a system that has not used disinfection has achieved lower rates of illness when disinfection of the groundwater is installed. Other research in Wisconsin as part of an Assessment of Virus Presence and Potential Virus Pathways in Deep Municipal Wells (Kenneth Bradbury, Wisconsin Geological and Natural History Survey) indicates that viruses are present in water sources that would not require disinfection under the Groundwater Rule. In order to improve public health protection at municipal water systems as intended by the Groundwater Rule, new rules are being proposed. The new rules in ch. NR 810 would require all municipal water systems to disinfect their water prior to the water entering their distribution systems. Currently 71 of the 614 municipal water systems in Wisconsin do not supply water that has been disinfected.

Updating design standards. Since the last revision to ch. NR 811, technologies have been developed or refined and are now used in the state, including membrane filtration, ultraviolet light disinfection, variable speed pump controls, peristaltic chemical feed pumps, pitless units, and new piping materials. Standards for these processes and others were incorporated into the recreated ch. NR 811 in order to provide designers a clear understanding of the requirements associated with use of these technologies.

Compliance with complex rules. The repeal and recreation of chs. NR 809 and NR 811 and the creation of ch. NR 810 all address issues associated with the usability of the existing rules. While not a triggering event, the volume of the drinking water rules has made it increasingly difficult to find specific rule requirements. The rule modifications creating an additional administrative code, restructuring ch. NR 809, and providing subsection headings where possible, were made to improve the understanding of and compliance with the rules by water systems. In addition, during stakeholder meetings, areas in the existing codes were identified that could be improved to provide clarity and consistency. Where consistent with the intent of existing rules, changes were incorporated into the rule modifications.

Summary of the rule modifications

Chapter NR 809 modifications:

- Adds requirements related to the federal Stage 2 Disinfection Byproduct Rule requiring community and non-transient non-community water systems that disinfect to monitor for disinfectant byproducts. This rule also changes the compliance measure from a system-wide average compliance to compliance at each monitoring location.
- Adds requirements related to early implementation activities associated with the Stage 2 Disinfection Byproduct Rule.
- Adds requirements related to the federal Long Term 2 Enhanced Surface Water Treatment Rule requiring surface water systems to conduct 24 months of monitoring to evaluate cryptosporidium levels in untreated water to assess the level of treatment required.
- Adds requirements related to the federal Groundwater Rule requiring water systems to correct significant deficiencies identified during department inspections according to an agreed upon schedule and requiring systems to conduct source water monitoring for a fecal indicator if the distribution water has tested total coliform positive. Systems that have sources that test positive for a fecal indicator would be required to take corrective action or install treatment that would achieve 4-log inactivation or removal of viruses.

- Adds flexibility by allowing laboratories to use analytical methods approved by EPA prior to inclusion in ch NR 809.
- Adds requirements related to the federal Lead and Copper Rule that incorporate updated public notice material on lead and copper, updated monitoring for lead and copper, and updated reporting on treatment or source changes.

Chapter NR 810 provisions:

- Clarifies the maintenance requirements for non-community and community water systems.
- Adds a requirement for continuous disinfection at all municipal water systems within 12 months of the effective date of the rule.
- Clarifies cross-connection control program requirements and increases flexibility in scheduling of cross connection inspections.
- Adds operational requirements pertaining to temporary water service, unattended water plant operation, operation manuals, and emergency well operation.
- Enhances water system security and emergency operations plan requirements.
- Blends existing surface water treatment requirements with Long Term 2 Enhanced Surface Water Treatment Rule requirements including enhanced treatment for cryptosporidium based on results from 24 months of raw water monitoring.

Chapter NR 811 modifications:

- Adds requirements to facilitate evaluation of well sites in relation to springs, outstanding resource waters, and class 1 trout streams as required by ch. NR 820.
- Modifies requirements to be consistent with DCOM requirements related to underground and above-ground storage tanks.
- Adds requirements allowing use of additional water system construction and operation options such as pitless units and variable speed pumps.
- Adds requirements allowing additional water treatment options including arsenic removal, tablet chlorinators, membrane filtration, and ultraviolet light disinfection.
- Updates requirements for waste disposal at water treatment plants.
- Updates water main installation requirements to reflect current acceptable materials and practices.
- Updates construction standards for water storage reservoirs.

How does this proposal affect existing policy?

The proposals are consistent with existing policy. As part of the department primacy agreement with US EPA the department adopts rules at least as stringent as the federal rules. In addition, the proposed rule modifications related to the federal Groundwater Rule, the Long Term 2 Enhanced Surface Water Treatment Rule, the Stage 2 Disinfectant Byproduct Rule, and the Lead and Copper Rule are not more stringent than the federal requirements.

There are no federal rules related to the design of community water systems. However, the department has a long history of adopting design requirements and updating them to reflect changes in best engineering practice, materials, and technology.

Operation and maintenance requirements for water systems previously incorporated into the long-standing design standards have been moved into a separate code for ease of use and to incorporate operational requirements of the federal Long Term 2 Enhanced Surface Water Treatment rule and the existing requirements related to operating surface water treatment systems.

The requirement for continuous disinfection at municipal water systems is consistent with current policy. The requirement is consistent as an extension of the current requirement that municipal water systems have the equipment to continuously disinfect the water in case unsafe water conditions exist and is consistent with adoption of other rules related to the Safe Drinking Water Act to proactively protect public health. In this case, the detection of viruses in drinking water raises questions about the safety of the drinking water and disinfection has demonstrated benefits to public health.

Has the Board dealt with these issues before? If so, when and why?

The Board has dealt with adopting rules related to the federal Safe Drinking Water Act numerous times in the past. The most recent was in 2007 to address changes in the Stage 1 Disinfection Byproduct Rule, the Long Term 1 Enhanced Surface Water Treatment Rule, and the Lead and Copper Rule. The Board last dealt with changing the design requirements for community water systems in 1991. The Board has partially dealt with the issue of disinfection at municipal water systems. The current version of ch. NR 811 requires municipal water systems to have the equipment available to continuously disinfect the water. This requirement was instituted to ensure municipal water systems will be able to quickly respond to unsafe water conditions (flooding, loss of system integrity, bacteriological contamination, etc.).

Who will be impacted by the proposed rule? How will they be impacted?

All public water supply systems will be impacted by the rule modifications to some differing extent based on the type of facility (e.g. restaurant, school, subdivision, commercial facility, municipality), the water source for the facility (surface water or groundwater), whether a system disinfects its water, and the type of disinfectant used. The largest number of systems (those serving non-community water systems such as restaurants, schools, industries, and campgrounds), while covered by chs. NR 809 and NR 810, will see little impact as they are already inspected according to the Groundwater Rule requirements, few employ disinfectant treatment, and none rely on surface water as a source. The 1077 community water systems will be impacted to the greatest degree with the largest impact occurring at the over 600 municipal water systems. These impacts occur because the systems are potentially covered by all of the rule changes included in chs. NR 809, NR 810, and NR 811, because the majority of the municipal systems chemically disinfect the water, and because the only systems using surface water in Wisconsin are municipal water systems. The impact of the Groundwater Rule to community water systems will be minimized as all of the systems are currently inspected according to Groundwater Rule requirements and relatively few would be subject to increased monitoring (approximately 30 systems based on 2008 data). The impact of the Long Term 2 Enhanced Surface Water Treatment Rule will result in increased monitoring for the 19 surface water systems. The rule changes related to the Stage 2 Disinfection Byproduct Rule will result in impacts to 719 community water systems. The rule changes associated with disinfection of municipal water systems will impact the 71 municipal systems that currently do not provide water that receives disinfection.

Information on environmental analysis.

These rules are a Type III action under s. NR 150.03(6)(b)3.b., Wis. Adm. Code. Preparation of an Environmental Assessment document is therefore not necessary.

Small business analysis

These rules should not have a significant impact on small business since the water systems operated by small businesses such as taverns and restaurants are already subject to the inspection and deficiency correction requirements included in the rule modifications.

Wisconsin Department of Administration
Division of Executive Budget and Finance
DOA-2048 (R10/2000)

Fiscal Estimate — 2009 Session

☒ Original ☐ Updated	LRB Number	Amendment Number if Applicable
☐ Corrected ☐ Supplemental	Bill Number	Administrative Rule Number NR 809, NR 810, NR 811

Subject

Federal Rules Affecting Public Drinking Water Systems

Fiscal Effect

State: ☐ No State Fiscal Effect
☐ Indeterminate

Check columns below only if bill makes a direct appropriation or affects a sum sufficient appropriation.

☐ Increase Existing Appropriation ☐ Increase Existing Revenues
☐ Decrease Existing Appropriation ☐ Decrease Existing Revenues
☐ Create New Appropriation

☒ Increase Costs — May be possible to absorb within agency's budget.
☒ Yes ☐ No

☐ Decrease Costs

Local: ☐ No Local Government Costs
☐ Indeterminate

1. ☒ Increase Costs
☐ Permissive ☒ Mandatory
2. ☐ Decrease Costs
☐ Permissive ☐ Mandatory
3. ☐ Increase Revenues
☐ Permissive ☐ Mandatory
4. ☐ Decrease Revenues
☐ Permissive ☐ Mandatory
5. Types of Local Governmental Units Affected:
☐ Towns ☒ Villages ☒ Cities
☐ Counties ☒ Others Sanitary Districts
☐ School Districts ☐ WTCS Districts

Fund Sources Affected

☐ GPR ☒ FED ☐ PRO ☐ PRS ☐ SEG ☐ SEG-S

Affected Chapter 20 Appropriations

20.370 4 (mm)

Assumptions Used in Arriving at Fiscal Estimate

The Department is proposing this rule to:

A. Address the requirements of the federal Groundwater Rule, the Stage 2 Disinfectants and Disinfection Byproduct Rule, and the Long Term 2 Enhanced Surface Water Treatment Rule.

B. Clarify and update rules to match current policies, procedures and design standards.

C. Incorporate mandatory disinfection at all municipal water systems.

In addition, in order to encompass operational and monitoring of treatment processes required under the Groundwater Rule, the rule package also includes provisions to restructure NR 809 and NR 811 and create NR 810.

A. Ch. NR 809 would be restructured to include water quality standards and compliance monitoring requirements of the Safe Drinking Water Act.

B. Ch. NR 811 would be restructured to include only design and construction requirements for community water systems.

C. Ch. NR 810 would be created to include the requirements for the operation and maintenance of all public water systems including the daily operation of water production, treatment and distribution.

This fiscal estimate addresses the fiscal impact of the rule package on the Department and on local units of government.

I. DNR FISCAL IMPACT

A. Groundwater Rule

1. One-Time Costs

This rule will require the Department to issue and track additional monitoring requirements. This will require modification

Long-Range Fiscal Implications

Prepared By:	Telephone No.	Agency
Joe Polasek	266-2794	Department of Natural Resources
Authorized Signature	**Telephone No.**	**Date (mm/dd/ccyy)**
	266-2794	

Fiscal Estimate — 2009 Session

Page 2 Assumptions Narrative Continued

LRB Number	Amendment Number if Applicable
Bill Number	Administrative Rule Number NR 809, NR 810, & NR 811

Assumptions Used in Arriving at Fiscal Estimate – Continued

to the Department's Drinking Water Data System. The Department estimates that this modification will take approximately 100 hours of contract programming time at an estimated hourly rate of $84. Therefore, 100 hours database architect contract programming time x $84/hour = $8,400

2. Annual Costs

a. The rule requires the Department to conduct sanitary surveys at all community water systems at least once every three years. The Department currently conducts sanitary surveys once every five years. The Department plans to offset the fiscal impact of increasing the frequency of sanitary surveys, by eliminating annual inspections at municipal water systems; therefore, the net fiscal impact of this requirement is estimated to be zero.

b. The rule requires the Department to complete a more complex review of monitoring plans for approximately 100 municipal systems that have multiple pressure zones within their service area. The Department estimates that each review will require 1 hour of staff time for a water supply engineer. Therefore, 100 reviews x 1 hr./review x $39.20/hr. salary and fringe for a water supply engineer = $3,920.

c. The rule requires the review of certain treatment systems for virus inactivation. The Department estimates that approximately 50 systems have treatment systems that will require Departmental review and that each review will take approximately 8 hours of staff time for a water supply engineer. Therefore, 50 reviews x 8 hrs./review x $39.20/hr. salary and fringe for a water supply engineer = $15,680.

d. The rule requires the Department to revise the sanitary survey process for transient non community (TNC) systems to include eight federally-required elements. For every TNC sanitary survey, the Department estimates that the rule change will require approximately 1 additional hour of staff time for a water supply specialist There are approximately 9,500 TNC systems in Wisconsin that require a sanitary survey at least once every five years, meaning that approximately 1,900 TNC systems will require sanitary surveys annually. Therefore 1,900 reviews x 1 hr./review x $32.06/hr. salary and fringe for a water supply specialist = $60,914.

B. Stage 2 Disinfectants and Disinfection Byproduct Rule

1. One-time Costs

a. The rule requires the Department to issue and track additional monitoring requirements. This will require modification of the Department's Drinking Water Data System. The Department estimates that this modification will take approximately 50 hours of contract programming time at an estimated hourly rate of $84. Therefore, 50 hours of database architect contract programming time x $84/hour = $4,200.

C. Long Term 2 Enhanced Surface Water Treatment Rule

1. One-time Costs

a. The rule will require the Department to issue and track additional monitoring requirements. This will require modification of the Department's Drinking Water Data System. The Department estimates that this modification will take approximately 50 hours of contract programming time at an estimated hourly rate of $84. Therefore, 50 hours of database architect contract programming time x $84/hour = $4,200.

In total, the rule will result in additional one-time costs of $16,800 and additional annualized costs of $80,500 and approximately 1.34 FTE of staff time required to implement the rule.

II. LOCAL GOVERNMENT FISCAL IMPACT

A. Stage 2 Disinfectants and Disinfection Byproduct Rule

1. Annual Costs

a. The rule will require additional monitoring of disinfection byproducts. The Department estimates that 615 systems affected by this rule will be required to collect additional samples at an everage cost of $580/system for a total estimated cost of $356,700.

B. Long Term 2 Enhanced Surface Water Treatment Rule

1. One-time Costs

a. The rule will require all municipal systems with surface water sources to complete additional source water monitoring for cryptosporidium and e-coli. There are currently 20 surface water systems in Wisconsin. The rule will require these systems to conduct 24 samples over a 5-year period starting in 2015. The estimated cost of the required analysis is $500/sample. Therefore, 20 surface water systems x 24 samples x $500/sample = $240,000.

C. Mandatory Disinfection Rule

1. One-time Costs

a. The rule will require all municipal water systems to disinfect drinking water. There are currently approximately 71 systems in Wisconsin serving water that is not disinfected, although all systems are required to have the necessary equipment to disinfect. The Department estimates that approximately 50 wells will need new disinfection equipment in order to implement permanent disinfection. The Department estimates that installing new disinfection equipment will cost approximately $10,000/well. Therefore, 50 municipal wells x $10,000/well = $500,000.

b. The rule will require all municipal water systems to disinfect drinking water. There are approximately 71 systems in Wisconsin serving water that is not disinfected. When these systems begin disinfection they will be required to conduct preliminary monitoring for disinfection by products. This preliminary monitoring will require two samples per quarter at a cost of $350/sample. Therefore, 71 systems x 2 samples/quarter x 4 quarters x $350 = $198,800.

2. Annual Costs

a. The rule will require all municipal water systems to disinfect drinking water. There are currently approximately 71 systems in Wisconsin serving water that is not disinfected. The Department estimates that chemicals for disinfection at these systems will cost an average of $145/month. Therefore, 71 systems x $145/month x 12 months = $123,540.

b. The Department estimates that the 71 systems affected by this rule will also incur additonal costs to conduct disinfection by-product monitoring. These systems will be required to collect 2 samples once every 3 years at a cost of $350/sample. Therefore, 71 systems x 2 samples x $350/sample ÷ 3 (once every 3 years) = $16,600.

In total, the rule will result in additional one-time costs of $496,800 and additional annualized costs of $938,800 for local units of government.

Wisconsin Department of Administration
Division of Executive Budget and Finance
DOA-2047 (R10/2000)

Fiscal Estimate Worksheet — 2009 Session

Detailed Estimate of Annual Fiscal Effect

☐ Original ☐ Updated	LRB Number	Amendment Number if Applicable
☐ Corrected ☐ Supplemental	Bill Number	Administrative Rule Number NR 809, NR 810, & NR 811

Subject

Federal Rules Affecting Public Drinking Water Systems

One-time Costs or Revenue Impacts for State and/or Local Government (do not include in annualized fiscal effect):

DNR one-time costs of $16,800 for contract programming. Local government one-time costs of $496,800.

Annualized Costs:	Annualized Fiscal Impact on State Funds from:	
A. State Costs by Category	Increased Costs	Decreased Costs
State Operations — Salaries and Fringes	$ 80,500	$ -
(FTE Position Changes)	(1.34 FTE)	(- FTE)
State Operations — Other Costs		-
Local Assistance		-
Aids to Individuals or Organizations		-
Total State Costs by Category	$ 80,500	$ -
B. State Costs by Source of Funds	Increased Costs	Decreased Costs
GPR	$	$ -
FED	80,500	-
PRO/PRS		-
SEG/SEG-S		-
State Revenues — Complete this only when proposal will increase or decrease state revenues (e.g., tax increase, decrease in license fee, etc.)	Increased Revenue	Decreased Revenue
GPR Taxes	$	$ -
GPR Earned		-
FED		-
PRO/PRS		-
SEG/SEG-S		-
Total State Revenues	$	$ -

Net Annualized Fiscal Impact

	State	Local
Net Change in Costs	$ 80,500	$ 938,800
Net Change in Revenues	$	$

Prepared By:	Telephone No.	Agency
Joe Polasek	266-2794	Department of Natural Resources
Authorized Signature	Telephone No.	Date (mm/dd/ccyy)
	266-2794	

[date]

ORDER OF THE STATE OF WISCONSIN NATURAL RESOURCES BOARD REPEALING AND RECREATING AND CREATING RULES

The Wisconsin Natural Resources Board proposes an order to **repeal and recreate** NR 809 – Safe Drinking Water and NR 811 – Design Requirements for Community Water Systems; and to **create** NR 810 – Requirements for the Operation and Maintenance of Public Water Supply Systems.

DG-19-09

Analysis Prepared by the Department of Natural Resources

1. Statute interpreted: ss. 280.11 and 281.17(8), Stats.

2. Statutory authority: ss. 280.11 and 281.17(8), Stats.

3. Explanation of agency authority: 280.11 – The department shall, after a public hearing, prescribe, publish, and enforce minimum reasonable standards and rules and regulations for methods to be pursued in the obtaining of pure drinking water for human consumption and the establishing of all safeguards deemed necessary in protecting the public health against the hazards of polluted sources of impure water supplies intended for human consumption.

281.17(8) – The department may establish, administer, and maintain a safe drinking water program no less stringent than the requirements of the safe drinking water act, 42 USC 300f to 300j-26.

4. Related statute or rule: None

5. Plain language analysis:

The proposal was triggered by changes in the federal Safe Drinking Water Act. The Stage 2 Disinfection Byproduct Rule was promulgated on 1/04/2006 and revises the monitoring locations and compliance calculation methods for disinfection byproducts. The Long Term 2 Enhanced Surface Water Treatment Rule was promulgated on 1/05/2006 and requires increased source water monitoring with new treatment levels associated with the monitoring results. The Groundwater Rule was promulgated on 11/08/2006 and requires that water systems initiate new monitoring and correct significant deficiencies identified during department inspections in order to protect consumers from viruses. The Short Term Revisions to the Lead and Copper Rule were promulgated on 10/10/2007 and changed the monitoring, reporting and public notification requirements related to lead and copper.

In order to maintain primacy for the Safe Drinking Water Act, Wisconsin must adopt all federal requirements under the Act or have requirements that are more stringent than the Act.
In addition to adopting the federal rules, the proposed rules include a requirement for mandatory disinfection at municipal water systems as an enhancement of the federal requirements, updates and clarifications to design standards for community water systems, and creation of a separate administrative rule on operations and maintenance of public water systems in order to improve the usability of the drinking water codes.

The major impact of the rule changes will be related to the Stage 2 Disinfection Byproduct Rule because of the large number of municipal water systems that disinfect (over 500) and the changes to the monitoring requirements and compliance calculations. Additionally, the requirement for mandatory disinfection of all municipal water system will require 71 municipal water systems that do not currently disinfect to do so.

6. Summary of, and comparison with, existing or proposed federal regulation:

The proposed rules will make state regulations compatible with federal regulations, satisfying the primacy requirements of the Safe Drinking Water Act and will update and clarify other state requirements.

7. Comparison with similar rules in adjacent states (Illinois, Iowa, Michigan and Minnesota):

A significant portion of the rule changes are based on changes to the federal rules. The adjacent states are in the process of adopting the federal rule changes. The changes to design standards are not based on federal rule changes. The adjacent states all have design standards based on the "Recommended Standards for Water Works" published by the Great Lakes Upper Mississippi River Board of State Public Health and Environmental Managers. These standards are updated on a 5 year cycle. Wisconsin is represented on the Water Supply Committee for development of the standards. The rule changes for design standards are the same or similar to the published standards. The federal rules do not require mandatory disinfection of groundwater systems. Illinois currently requires disinfection of all community water systems. All of the other adjacent states have mandatory disinfection for community water systems using groundwater based on their vulnerability to contamination by bacteria. All of the adjacent states will be evaluating disinfection at public water systems as part of the federal Groundwater Rule adoption and will be expanding disinfection requirements to systems vulnerable to fecal contamination.

8. Summary of factual data and analytical methodologies used and how any related findings support the regulatory approach chosen:

The bulk of the rule changes are based on federal rule changes, changes to nationally recognized design standards, and clarification or updating comments gathered during a series of stakeholder meetings. The rule change associated with mandatory disinfection of municipal water systems served by groundwater stems in part from the federal

Groundwater Rule and in part from research in Wisconsin on virus occurrence, illness related to viruses in drinking water, and the impact of disinfection on reducing viral related illness. The research studies considered were a Wisconsin Water and Health Trial for Enteric Risk (WAHTER) study conducted by the Marshfield Clinic Research Foundation and "An Assessment of Virus Presence and Potential Virus Pathways in Deep Municipal Wells" conducted by the Wisconsin Geological and Natural History Survey. The WAHTER study investigated the relationship between virus occurrence and illness rates in 14 Wisconsin communities using undisinfected and disinfected groundwater. The assessment study evaluated the occurrence of viruses in the deep wells serving the City of Madison. These studies support the following conclusions:

1. Use of alternate parameters, as proposed by the Groundwater Rule, is inadequate to predict virus occurrence or the vulnerability of wells to contamination by viruses.
2. Viruses occur in municipal wells that are not vulnerable using current assessment tools.
3. Illness attributable to viruses is occurring at municipal water systems supplied by groundwater.
4. Disinfection reduces the illness rates attributable to viruses at municipal water systems supplied by groundwater.

It is proposed to require mandatory disinfection of all municipal water systems served by groundwater based on the intent of the Groundwater Rule to reduce illness rates attributable to viruses at groundwater systems and conclusions drawn from a review of studies conducted on viral illness and virus occurrence in Wisconsin.

9. Analysis and supporting documents used to determine the effect on small business or in preparation of an economic impact report:

An analysis of the effect of the proposed rules on small business was not performed since the primarily impacted systems are community water systems serving municipal water systems, which are not small businesses.

10. Effect on small business:

These rules should not have a significant impact on small business since the water systems operated by small businesses such as taverns and restaurants are already subject to the inspection and deficiency correction requirements included in the rule modifications.

11. Agency contact person:

Lee Boushon, Chief
Public Water Supply Section
(608) 266-0857
lee.boushon@wi.gov

12. Place where comments are to be submitted and deadline for submission:

Written comments may be submitted at the public hearings, by regular mail, fax or email to:
Lee Boushon
Department of Natural Resources
Bureau of Drinking Water and Groundwater
PO Box 7921
Madison WI 53707
Fax (608) 267-7650
Written comments may also be submitted to the Department using the Wisconsin Administrative Rules Internet Web site at http://adminrules.wisconsin.gov.

Hearing dates and the comment submission deadline are to be determined.

The consent of the Attorney General will be requested for the incorporation by reference of new test methods in ch. NR 809.

SECTION 1. NR 809 is repealed and recreated to read:

Chapter NR 809
SAFE DRINKING WATER

NR 809.01 Purpose.
NR 809.02 Departmental justification.
NR 809.03 Applicability.
NR 809.04 Definitions.
NR 809.05 Coverage.
NR 809.06 General requirements.

Subchapter I — Maximum Contaminant Levels, Monitoring and Analytical Requirements for Primary Drinking Water Contaminants

NR 809.07 Maximum contaminant level goals for primary contaminants.
NR 809.09 Applicability of primary maximum contaminant levels to water sources.
NR 809.11 Inorganic chemical maximum contaminant levels and BATs.
NR 809.113 Sample collection and analytical requirements for inorganic contaminants.

NR 809.115	**Monitoring requirements for inorganic contaminants.**
NR 809.117	**Compliance requirements for inorganic contaminants.**
NR 809.118	**Sodium monitoring, reporting and notification requirements.**
NR 809.119	**Materials identification for corrosivity characteristics.**
NR 809.20	**Synthetic organic contaminant maximum contaminant levels and BATS.**
NR 809.203	**Analytical requirements for synthetic organic contaminants.**
NR 809.205	**Monitoring requirements for synthetic organic contaminants.**
NR 809.207	**Compliance requirements for synthetic organic contaminants.**
NR 809.24	**Volatile organic contaminant maximum contaminant levels and BATS.**
NR 809.243	**Analytical requirements for volatile organic contaminants.**
NR 809.245	**Monitoring requirements for volatile organic contaminants.**
NR 809.247	**Compliance requirements for volatile organic contaminants.**
NR 809.25	**Special monitoring, and reporting, for selected organic contaminants and sulfate.**
NR 809.30	**Distribution System microbiological contaminant maximum contaminant levels.**
NR 809.31	**Distribution system microbiological contaminant monitoring requirements.**
NR 809.311	**Analytical requirements for microbiological contaminants.**
NR 809.312	**Compliance reporting for microbiological contaminants.**
NR 809.32	**Groundwater Microbiological Source Water monitoring - General requirements.**
NR 809.323	**Analytical requirements for groundwater source microbiological contaminants.**
NR 809.325	**Groundwater source microbial monitoring requirements.**
NR 809.327	**Compliance requirements for groundwater source microbial monitoring.**
NR 809.328	**Treatment technique compliance for groundwater source microbial contaminants.**
NR 809.329	**Reporting and recordkeeping requirements for groundwater systems.**
NR 809.33	**Surface water microbiological organisms and indicators.**
NR 809.331	**Surface Water Source Monitoring.**
NR 809.332	**Sampling schedules for surface water source water monitoring.**
NR 809.333	**Sampling locations for surface water source water monitoring.**
NR 809.334	**Analytical methods for surface water source water monititoring.**
NR 809.335	**Approved laboratories for surface water source monitoring.**
NR 809.336	**Reporting source water monitoring results.**
NR 809.35	**Sanitary survey requirements for all public water systems.**
NR 809.50	**Maximum contaminant levels, compliance dates and best available technologies for radionuclides.**
NR 809.51	**Beta particle and photon radioactivity from man-made radionuclides maximum contaminant levels.**
NR 809.52	**Analytical methods for radionuclides.**

NR 809.53 **Radionuclide monitoring frequency and compliance requirements for community water systems.**

Subchapter II — Control of Lead and Copper

NR 809.54 **General requirements for the control of Lead and Copper.**
NR 809.541 **Monitoring and analytical requirements for Lead and Copper.**
NR 809.542 **Applicability of corrosion control treatment steps for small, medium and large-size water systems.**
NR 809.543 **Description of corrosion control treatment requirements.**
NR 809.544 **Source water treatment requirements for corrosion control.**
NR 809.545 **Lead service line replacement requirements.**
NR 809.546 **Public education and supplemental monitoring requirements.**
NR 809.547 **Monitoring requirements for lead and copper in tap water.**
NR 809.548 **Monitoring requirements for water quality parameters.**
NR 809.549 **Monitoring requirements for lead and copper in source water.**
NR 809.55 **Reporting requirements for lead and copper.**

Subchapter III — Maximum Contaminant Levels, Maximum Residual Disinfectant Levels, Monitoring, Analytical Requirements and Control of Disinfection Byproducts, Disinfection Residuals, Stage 1 DBP and Stage 2 DBP rules

NR 809.561 **Maximum residual disinfectant level goals (MRDLGs), and maximum contaminant levels (MCLs) for disinfection byproducts, maximum residual disinfectant levels (MRDLs) and best available treatment.**
NR 809.562 **General requirements for disinfection byproducts and disinfection residuals Stage 1 DBP.**
NR 809.563 **Analytical requirements for disinfection byproducts and disinfection residuals for Stage 1 DBP and Stage 2 DBP .**
NR 809.565 **Monitoring requirements fordisinfection byproducts and disinfection residuals Stage 1 DBP.**
NR 809.566 **Compliance requirements for disinfection byproducts and disinfection residuals Stage 1 DBP .**
NR 809.567 **Reporting and recordkeeping requirements for disinfection byproducts and disinfection residuals for Stage 1 DBP.**
NR 809.569 **Treatment techniques for control of disinfection byproduct (DBP) precursors.**
NR 809.60 **General requirements for Stage 2 DBP disinfection byproducts control.**
NR 809.61 **Routine monitoring for Stage 2 DBP.**
NR 809.62 **Monitoring plan for Stage 2 DBP.**
NR 809.63 **Requirements for reduced and increased monitoring for Stage 2 DBP.**
NR 809.64 **Additional disinfection byproducts requirements for consecutive systems under Stage 2 DBP.**

NR 809.65 **Operational evaluation levels for disinfection byproducts under Stage 2 DBP.**
NR 809.66 **Requirements for remaining on reduced TTHM and HAA5 monitoring based on disinfection byproducts Stage 1 DBP results.**
NR 809.67 **Requirements for remaining on increased TTHM and HAA5 monitoring based on disinfection byproducts Stage 1 DBP results.**
NR 809.68 **Reporting and recordkeeping requirements for Stage 2 DBP.**

Subchapter IV — Miscellaneous Chemical Monitoring Requirements, Raw Surface Water Standards, and Certified Laboratories

NR 809.70 **Secondary inorganic chemical and physical standards.**
NR 809.71 **Sampling and analytical requirements for secondary standards.**
NR 809.73 **Sampling and analytical requirements for other chemicals.**
NR 809.74 **Additional requirements for systems which chlorinate or fluoridate water.**
NR 809.75 **Raw surface water standards.**
NR 809.76 **Laboratory Certification.**
NR 809.77 **Monitoring of consecutive public water systems.**

Subchapter V — Reporting, Consumer Confidence Reports and Record Keeping

NR 809.80 **Reporting requirements.**
NR 809.82 **Record maintenance.**
NR 809.83 **Consumer confidence report applicability and deadlines.**
NR 809.833 **Content of consumer confidence reports.**
NR 809.835 **Required additional health information for consumer confidence reports.**
NR 809.837 **Consumer confidence report delivery and recordkeeping.**

Subchapter VI — Conditional Waivers and Variances

NR 809.90 **Conditional waivers.**
NR 809.905 **Conditional waivers from the maximum contaminant levels for uranium .**
NR 809.91 **Nitrate variances.**

Subchapter VII — Public Notification of Drinking Water Violations

NR 809.950 **General public notification requirements.**
NR 809.951 **Tier 1 public notice--form, manner, and frequency of notice.**
NR 809.952 **Tier 2 public notice--form, manner, and frequency of notice.**
NR 809.953 **Tier 3 public notice--form, manner, and frequency of notice.**

NR 809.955 Notice to new billing units or new customers.
NR 809.956 Special notice of the availability of unregulated contaminant monitoring results.
NR 809.957 Special notice for exceedance of the secondary maximum contaminant level for fluoride.
NR 809.958 Special notice for nitrate exceedances above MCL by non-community water systems, where granted permission by the department under s. NR 809.11 (3).
NR 809.959 Public notice by the department on behalf of the public water system.
NR 809.960 Special notice for significant deficiencies or source groundwater fecal contamination.
NR 809.970 Special notice for repeated failure to conduct monitoring of the source water for Cryptosporidium and for failure to determine bin classification or mean Cryptosporidium level.

Subchapter VIII – Initial Distribution System Evaluation

NR 809.97 Initial Distribution System Evaluations.
NR 809.971 Standard monitoring.
NR 809.973 System specific studies.

NR 809.974 40/30 certification.
NR 809.975 Very small system waivers.
NR 809.976 Compliance monitoring location recommendations.

NR 809.01 Purpose. The purpose of this chapter is to establish minimum standards and procedures for the protection of the public health, safety and welfare in the obtaining of safe drinking water. This chapter is adopted under the authority granted in s. 281.12, Stats., and ch. 280, Stats.

Note: See chs. NR 108, 114, 810, 811 and 812 for other requirements pertaining to public and private drinking water systems.

NR 809.02 Departmental justification. (1) Where the department exercises discretion allowed under this chapter to require a public water system owner or operator to perform construction, repairs, monitoring or other activities which would necessitate expenditure of resources, the department shall explain in writing the reasons for the requirements.

(2) A decision by the department to grant a waiver shall be made in writing and shall set forth the basis for the determination. The waiver determination may be initiated by the department or upon an application by the owner or operator of a public water system.

NR 809.03 Applicability. The provisions of this chapter shall apply to all new and existing public water systems as defined in this chapter.

NR 809.04 Definitions. In this chapter:

(1) "Action level" is the concentration of lead or copper in water which determines, in some cases, the treatment requirements that a water system is required to complete.

(2) "Best available technology" or "BAT" means the best technology treatment techniques, or other means which the U.S. environmental protection agency finds, after examination for efficacy under field conditions and not solely under laboratory conditions, are available, taking cost into consideration.

(3) "Coagulation" means a process using coagulant chemicals and mixing by which colloidal and suspended materials are destabilized and agglomerated into flocs.

(4) "Combined distribution system" means an interconnected distribution system consisting of the distribution systems of wholesale systems and of the consecutive systems that receive finished water.

(5) "Community water system" or "CWS" means a public water system which serves at least 15 service connections used by year-round residents or regularly serves at least 25 year-round residents. Any public water system serving 7 or more homes, 10 or more mobile homes, 10 or more apartment units, or 10 or more condominium units shall be considered a community water system unless information is available to indicate that 25 year-round residents will not be served.

(6) "Compliance cycle" means the 9-year calendar year cycle during which public water systems shall monitor. Each compliance cycle consists of 3, 3 year compliance periods. The first compliance cycle begins January 1, 1993 and ends December 31, 2001; the second begins January 1, 2002 and ends December 31, 2010; the third begins January 1, 2011 and ends December 31, 2019.

(7) "Compliance period" means a 3 year calendar year period within a compliance cycle. Each compliance cycle has 3, 3-year compliance periods. Within the first compliance cycle, the first compliance period runs from January 1, 1993 to December 31, 1995; the second from January 1, 1996 to December 31, 1998; the third from January 1, 1999 to December 31, 2001.

(8) "Comprehensive performance evaluation" or "CPE" means a thorough review and analysis of a treatment plant's performance-based capabilities and associated administrative, operation and maintenance practices. It is conducted to identify factors that may be adversely impacting a plant's capability to achieve compliance and emphasizes approaches that can be implemented without significant capital improvements. For purposes of compliance with this chapter, the comprehensive performance evaluation shall consist of at least the following components: Assessment of plant performance; evaluation of major unit processes; identification and prioritization of performance limiting factors; assessment of the applicability of comprehensive technical assistance; and preparation of a CPE report.

(9) "Confirmed presence" means the presence of coliform bacteria in a water sample confirmed by a total coliform-positive repeat sample.

(10) "Confluent growth" means a continuous bacterial growth covering the entire filtration area of a membrane filter, or a portion thereof, in which bacterial colonies are not discrete.

(11) "Consecutive System" means a public water system that receives some or all of its finished water from one or more wholesale suppliers or wholesaler systems through a master metering system. This system may also be known as a wholesale purchaser or

wholesale customer. Delivery may be through a direct connection or through the distribution system of one or more consecutive systems.

(12) "Conventional filtration treatment" means a series of processes including coagulation, flocculation, sedimentation, and filtration resulting in substantial particulate removal.

(13) "CT" or "CTcalc" "CT" or "CT calc" is the product of the residual disinfectant concentration (C) in mg/l determined before or at the first customer, and the corresponding disinfectant contact time (T) in minutes, i.e., "C" x "T". If a public water system applies disinfectants at more than one point prior to the first customer, it shall determine the CT of each disinfectant sequence before or at the first customer, to determine the total percent inactivation or "total inactivation ratio." The inactivation ratio for a single disinfectant sequence is:

$$\frac{CT_{calc}}{CT_{table}}$$

where "CT_{table}" is the CT value required for the target organism and the target level of inactivation as contained in ss. NR 810.47 to 810.61. The sum of the inactivation ratios, or total inactivation ratio for a series of disinfection sequences is:

$$\sum \frac{(CT_{calc})}{CT_{table}}$$

and is calculated by adding together the inactivation ratio for each disinfection sequence. In determining the total inactivation ratio, the public water system owner or operator shall determine the residual disinfectant concentration of each sequence and corresponding contact time before any subsequent disinfection application points. A total inactivation ratio equal to or greater than 1.0 is assumed to provide the target level of disinfection of the target organism.

(14) "Contaminant" means any physical, chemical, biological, or radiological substance or matter in water.

(15) "Corrosion inhibitor" means a substance capable of reducing the corrosivity of water toward metal plumbing materials, especially lead and copper, by forming a protective film on the interior surface of those materials.

(16) "Department" means the department of natural resources.

(17) "Diatomaceous earth filtration" means a process resulting in substantial particulate removal in which:

(a) A pre-coat cake of diatomaceous earth filter media is deposited on a support membrane (septum); and

(b) While the water is filtered by passing through the cake on the septum, additional filter media known as body feed is continuously added to the feed water to maintain the permeability of the filter cake.

(18) "Direct filtration" means a series of processes including coagulation and filtration but excluding sedimentation resulting in substantial particulate removal.

(19) "Disinfectant contact time" ("T" in CT calculations) means the time in minutes that it takes for water to move from the point of disinfectant application or the previous point of disinfectant residual measurement to a point before or at the point where residual disinfectant concentration ("C") is measured. Where only one "C" is measured, "T" is the time in minutes that it takes for water to move from the point of disinfectant application

to a point before or where residual disinfectant concentration ("C") is measured. Where more than one "C" is measured, "T" is:

(a) For the first measurement of "C", the time in minutes that it takes for water to move from the first or only point of disinfectant application to a point before or at the point where the first "C" is measured; and

(b) For subsequent measurements of "C", the time in minutes that it takes for water to move from the previous "C" measurement point to the "C" measurement point for which the particular "T" is being calculated. Disinfectant contact time in pipelines shall be calculated based on "plug flow" by dividing the internal volume of the pipe by the maximum hourly flow rate through the pipe. Disinfectant contact time within mixing basins and storage reservoirs shall be determined by tracer studies or other department approved equivalent demonstration.

(20) "Disinfection" means a process which inactivates pathogenic organisms in water by chemical oxidants or equivalent agents.

(21) "Disinfection profile" means a summary of daily *Giardia lamblia* inactivation through the treatment plant. The procedure for developing a disinfection profile is contained in s. NR 810.32.

(22) "Domestic or other non-distribution system plumbing problem" means a coliform contamination problem in a public water system with more than one service connection that is limited to the specific service connection from which the coliform-positive sample was taken.

(23) "Dose equivalent" means the product of the absorbed dose for ionizing radiation and such factors as account for differences in biological effectiveness due to the type of radiation and its distribution in the body as specified by the international commission on radiological units and measurements (ICRUM).

(24) "Dual sample set" means a set of two samples collected at the same time and same location, with one sample analyzed for total trihalomethanes (TTHM) and the other sample analyzed for Haloacetic acids five (HAA5).

(25) "Enhanced coagulation" means the addition of sufficient coagulant for improved removal of disinfection byproduct precursors by conventional filtration treatment.

(26) "Enhanced softening" means the improved removal of disinfection byproduct precursors by precipitative softening.

(27) "Effective corrosion inhibitor residual" means a concentration sufficient to form a protective coating on the interior walls of a pipe.

(28) "Entry point" means a location in the water system after treatment or chemical addition, if any, but prior to the distribution system. A sample collected in the distribution system may be considered an entry point sample if the department has determined it is more representative of the water sources.

(28) "Environmental protection agency" or "EPA" means the agency of the United States federal government ultimately responsible for establishing and enforcing national primary drinking water regulations.

(29) "Filter profile" means a graphical representation of individual filter performance, based on continuous turbidity measurements or total particle counts versus time for an entire filter run, from startup to backwash inclusively, that includes an assessment of filter performance while another filter is being backwashed.

(30) "Filtration" means a process for removing particulate matter from water by passage through porous media.

(31) "Finished water" means water that is introduced into the distribution system of a public water system and is intended for distribution and consumption without further treatment, except as treatment necessary to maintain water quality in the distribution system, for example booster disinfection or addition of corrosion control chemicals.

(32) "First draw sample" means a one-liter sample of tap water that has been standing in plumbing pipes at least 6 hours and is collected without flushing the tap.

(33) "Flocculation" means a process to enhance agglomeration or collection of smaller floc particles into larger, more easily settleable particles through gentle stirring by hydraulic or mechanical means.

(34) "GAC10" means granular activated carbon filter beds with an empty-bed contact time of 10 minutes based on average daily flow and a carbon reactivation frequency of every 180 days.

(35) "Gross alpha particle activity" means the total radioactivity due to alpha particle emission as inferred from measurements on a dry sample.

(36) "Gross beta particle activity" means the total radioactivity due to beta particle emission as inferred from measurements on a dry sample.

(37) "Groundwater under the direct influence of surface water"(GWUDI) means any water beneath the surface of the ground with:

(a) Occurrence of insects or other macroorganisms, algae or large diameter pathogens such as *Giardia lamblia* or *Cryptosporidium*, in greater than or equal to 10% of representative source water samples collected over a period of 6 months, immediately prior to the first or only point of disinfectant application, or

(b) Evidence of relatively rapid shifts in water characteristics such as turbidity, temperature, conductivity, or pH which closely correlate to climatological or surface water conditions where the department determines that these shifts are indications of the potential for contamination of the groundwater by the organisms identified in par. (a).

(38) "Initial compliance period" means the first full 3-year compliance period which begins at least 18 months after promulgation of the federal regulations. For monitoring contaminants in s. NR 809.11 (2) (b) and in s. NR 809.20 (1)(b), the initial compliance period means January 1993 - December 1995 for systems with 150 or more service connections and January 1996 - December 1998 for systems having fewer than 150 service connections.

(39) "Haloacetic acids (five)" or "HAA5" means the sum of the concentrations in milligrams per liter of the haloacetic acid compounds (monochloroacetic acid, dichloroacetic acid, trichloroacetic acid, monobromoacetic acid and dibromoacetic acid), rounded to 2 significant figures after addition.

(40) "Holding time" means the period from time of sampling to time of analysis. In all cases, samples should be analyzed as soon after collection as possible

(41) "Initial Distribution System Evaluation or "IDSE" means the monitoring and other requirements under the federal rule 40 CFR part 141 Subpart U for establishing compliance monitoring locations for disinfection byproducts under s. NR 809.60, requirements for Stage 2 disinfection byproducts.

(42) "Large water system" means, for the purpose of monitoring lead and copper, a water system that serves more than 50,000 persons.

(43) "Lead service line" means a service line made of lead which connects the water main to the building inlet and any lead pigtail, gooseneck or other fitting which is connected to such lead line.

(44) "*Legionella*" means a genus of bacteria, some species of which have caused a type of pneumonia called Legionnaires disease.

(45) "Locational running annual average" or "LRAA" means the average of sample analytical results for samples taken at a particular monitoring location during the previous four calendar quarters.

(46) "Long term 2 surface water treatment rule" or "LT2" means the monitoring and requirements under the federal rule 40 CFR part 141 Subpart W.

(47) "Man-made beta particle and photon emitters" means all radionuclides emitting beta particles or photons, or both, listed in Maximum Permissible Body Burdens and Maximum Permissible Concentration of Radionuclides in Air or Water for Occupational Exposure, NBS Handbook 69, except the daughter products of thorium-232, uranium-235 and uranium-238.

(48) "Maximum contaminant level" or "MCL" means the maximum permissible level of a contaminant in water which is delivered to any user of a public water system.

(49) "Maximum contaminant level goal" or "MCLG" means the maximum level of a contaminant in drinking water at which no known or anticipated adverse affect on the health of persons would occur, and which allows an adequate margin of safety. Maximum contaminant level goals are non-enforceable health goals.

(50) "Maximum residual disinfectant level" or "MRDL" means a level of a disinfectant added for water treatment that may not be exceeded at the consumer's tap without an unacceptable possibility of adverse health effects.

(51 "Maximum residual disinfectant level goal" or "MRDLG" means the maximum level of a disinfectant added for water treatment at which no known or anticipated adverse effect on the health of persons would occur, and which allows an adequate margin of safety. MRDLGs are nonenforceable health goals and do not reflect the benefit of the addition of the chemical for control of waterborne microbial contaminants.

(52) "Medium-size water system" means, for the purpose of monitoring lead and copper, a water system that serves greater than 3,300 and less than or equal to 50,000 persons.

(53) "Near the first service connection" means at one of the 20% of all service connections in the entire system that are nearest the water supply treatment facility or water supply source, as measured by water transport time within the distribution system.

(54) "Non-community water system" or "NCWS" means a public water system that is not a community water system. A non-community water system is either a non-transient non-community water system or a transient non-community water system.

(55) "Non-transient non-community water system" or "NTNCWS" means a non-community water system that regularly serves at least 25 of the same persons over 6 months per year. Examples of non-transient non-community water systems include those serving schools, day care centers and factories.

(56) "Optimal corrosion control treatment" means the corrosion control treatment that minimizes the lead and copper concentrations at users' taps while insuring that the treatment does not cause the water system to violate any national primary drinking water regulations as listed in part 141 of the code of federal regulations CFR 40.

(57) "Person" means an individual, corporation, company, association, cooperative, trust, institution, partnership, state, municipality, or federal agency.

(58) "Picocurie" or "pCi" means that quantity of radioactive material producing 2.22 nuclear transformations per minute.

(59) "Plant" means any facility for the obtainment of potable water, whether from surface water or groundwater sources, for a community water system.

(60) "Point-of-disinfectant application" is the point where the disinfectant is applied and water downstream of that point is not subject to recontamination by surface runoff.

(61) "Point-of-entry treatment device" or "POE" is a water treatment device applied to the drinking water entering a house or building for the purpose of reducing contaminants in the drinking water distributed throughout the house or building.

(62) "Point-of-use treatment device" or "POU" is a water treatment device applied to a single tap used for the purpose of reducing contaminants in drinking water at that one tap.

(63) "Primary maximum contaminant levels" means those maximum contaminant levels which represent minimum public health standards.

(64) "Public water system" or "system" or "PWS" means a system for the provision to the public of piped water for human consumption through pipes or other constructed conveyances, if the system has at least 15 service connections or regularly serves an average of at least 25 individuals daily at least 60 days out of the year. A public water system is either a "community water system" or a "non-community water system." A system:

(a) Includes any collection, treatment, storage and distribution facilities under control of the operator of the system and used primarily in connection with the system.

(b) Includes any collection or pretreatment storage facilities not under the system's control which are used primarily in connection with the system.

(c) Does not include any "special irrigation district."

Note: The definition of public water system as regulated by this chapter is broader and includes more water systems than those governed by the public service commission under its definition of a public utility in ch. 196, Stats.

(65) "Rem" means the unit of dose equivalent from ionizing radiation to the total body or any internal organ or organ system. A "millirem" or "mrem" is 1/1000 of a rem.

(66) "Repeat compliance period" means any subsequent compliance period after the initial compliance period.

(67) "Residual disinfectant concentration" ("C" in CT calculations) means the concentration of disinfectant measured in mg/l in a representative sample of water.

(68) "Running annual average" means the sum of 1, 2, 3 or 4 calendar quarter sample results divided by 4. The first sample may be the average of the initial and confirmation sample results. If more than 4 calendar quarters of samples have been collected in more than 4 consecutive calendar quarters, the results from the 4 most recent quarters shall be used. If multiple compliance samples are collected in a single calendar quarter, the

sample which yielded the highest concentration shall be used to calculate the running annual average.

(69) “Sanitary survey” means an on-site inspection of the water source, facilities, equipment, operation and maintenance of a public water system for the purpose of evaluating the adequacy of the source, facilities, equipment, operation and maintenance for producing and distributing safe drinking water.

(70) “Secondary drinking water standards” means those standards for aesthetic parameters which represent minimum public welfare concerns but do not represent health standards.

(71) “Sedimentation” means a process for removal of solids before filtration by gravity or separation.

(72) “Service line sample” means a one-liter sample of water that has been standing for at least 6 hours in a service line.

(73) “Single family structure” means a building constructed as a single-family residence that is currently used as either a residence or a place of business.

(74) “Significant deficiency" means, but is not limited to, defects in design, operation, or maintenance of a water system, or a failure or malfunction of the water sources, treatment, storage or distribution system of a water system that the department determines to be causing the introduction of contamination into the water delivered to consumers or when the department determines that a health risk exists to consumers of the water.

(75) “Slow sand filtration” means a process involving passage of raw water through a bed of sand at low velocity, generally less than 0.4 m/h, resulting in substantial particulate removal by physical and biological mechanisms.

(76) “Small water system” means, for the purposes of monitoring lead and copper, a water system that serves 3,300 persons or fewer.

(77) “Special irrigation district” means an irrigation district in existence prior to May 18, 1994 that provides primarily agricultural service through a piped water system with only incidental residential or similar use where the system or the residential or similar users of the system are supplied with water that meets all maximum contaminant levels of subch. I.

(78) “Stage 1 Disinfection Byproducts” or “Stage 1 DBP” means the compliance requirements under the federal rule 40 CFR part 141 Subpart L.

(79) “Stage 2 Disinfection Byproducts” or “Stage 2 DBP” means the compliance requirements under the federal rule 40 CFR part 141 Subpart U.

(80) “Surface water” means all water which is open to the atmosphere and subject to surface runoff.

(81) “Surface water systems” means public water systems using surface water or groundwater under the direct influence of surface water as a source and that are subject to the requirements of 40 CFR 141, subpart H, which contains the national primary drinking water regulations.

(82) “System with a single service connection” means a system which supplies drinking water to consumers via a single service line.

(83) “Supplier of water” or “water supplier” means any person who owns or operates a public water system.

(84) "SUVA" means specific ultraviolet absorption at 254 nanometers (nm).

Note: SUVA is an indicator of the humic content of water. It is a calculated parameter obtained by dividing a sample's ultraviolet absorption at a wavelength of 254 nm (UV_{254}) (measured in m^{-1}) by its concentration of dissolved organic carbon (DOC) (in mg/L).

(85) "Total organic carbon" or "TOC" means total organic carbon in mg/L measured using heat, oxygen, ultraviolet irradiation, chemical oxidants or combinations of these oxidants that convert organic carbon to carbon dioxide, rounded to 2 significant figures.

(86) "Too numerous to count" means that the total number of bacterial colonies exceeds 200 on a 47-mm diameter membrane filter used for coliform detection.

(87) "Transient non-community water system" or "TNCWS" means a non-community water system that serves at least 25 people at least 60 days of the year but does not regularly serve at least 25 of the same persons over 6 months per year. Examples of transient non-community water systems include those serving taverns, motels, restaurants, churches, campgrounds and parks.

(88) "Waterborne disease outbreak" means the significant occurrence of acute infectious illness, epidemiologically associated with the ingestion of water from a public water system which is deficient in treatment or is supplied from a contaminated source, as determined by the department or other local or state agency.

(89) "Wholesale system" means a public water system that treats source water as necessary to produce finished water and then delivers some or all of that finished water to another public water system. Delivery may be through a direct connection or through the distribution system of one or more consecutive systems.

(90) "Virus" means a virus of fecal origin which is infectious to humans by waterborne transmission.

(91) "4 log treatment of viruses" means a treatment process or a combination of treatment processes that provides inactivation or removal of 99.99% of viruses.

NR 809.05 Coverage. This chapter applies to each public water system, unless the public water system meets all of the following conditions:

(1) Consists only of distribution and storage facilities and does not have any collection or treatment facilities.

(2) Obtains all of its water from, but is not owned or operated by, a public water system to which such regulations apply.

(3) Does not sell water to any person.

(4) Is not a carrier which conveys passengers in interstate commerce.

NR 809.06 General requirements. Public water systems shall meet applicable minimum monitoring requirements stated in this chapter. The department may increase any monitoring requirements in this chapter, if the department determines that any increase is necessary to protect public health, safety or welfare. The department may decrease any monitoring requirements in this chapter, if the department determines that such a decrease will not adversely affect protection of public health, safety or welfare.

Subchapter I — Maximum Contaminant Levels, Monitoring and Analytical Requirements for Primary Drinking Water Contaminants

NR 809.07 Maximum contaminant level goals for primary contaminants. **(1)** Maximum contaminant level goals (MCLGs) are zero for the following contaminants:

Giardia lamblia
Cryptosporidium
Legionella
Total Coliforms
Fecal Coliforms
Escherichia coli
Lead
Arsenic
Chloroform
Bromodichloromethane
Bromoform
Bromate
Dichloroacetic acid
Combined radium-226 and radium-228
Beta particle and photon radioactivity
Gross alpha particle activity (excluding radon and uranium)
Uranium

(2) Maximum contaminant level goals (MCLGs) which are less than the MCLs are as follows:

Contaminant	**MCLG in mg/ L**
Acrylamide	0.00001
Alachlor	0.0004
Benzene	0.001
Benzo[a]pyrene	0.000002
Carbon tetrachloride	0.0003
Chlordane	0.00003
Chlorite	0.8
Dibromochoromethane	0.06
Dibromochloropropane	0.00003
Di(2-ethylhexyl)phthalate	0.003
1,2-Dichloroethane	0.0004
1,2-Dichloropropane	0.0005
Epichlorohydrin	0.004
Ethylene Dibromide	0.0000004
Heptachlor	0.000008
Heptachlor Epoxide	0.000004
Hexachlorobenzene	0.00002
Pentachlorophenol	0.0003
Polychlorinated biphenyls (PCBs)	0.000005
2,3,7,8-TCDD (Dioxin)	2×10^{-10}
Tetrachloroethylene	0.0007

Thallium	0.0005
Toxaphene	0.00003
1,1,2-Trichloroethane	0.003
Trichloroethylene	0.003
Vinyl chloride	0.000015

(3) MCLGs which equal the MCLs are as follows:

Contaminant	**MCLG in mg/ L**
Atrazine, (total chlorinated residue)[1]	0.003
Antimony	0.006
Asbestos	7 Million fibers/L (longer than 10 micrometers)
Barium	2
Beryllium	0.004
Cadmium	0.005
Carbofuran	0.04
Chromium	0.1
Copper	1.3
Cyanide(as free Cyanide)	0.2
2,4-D	0.07
Dalapon	0.2
o-Dichlorobenzene	0.6
para-Dichlorobenzene	0.075
1,1-Dichloroethylene	0.007
cis-1,2-Dichloroethylene	0.07
trans-1,2-Dichloroethylene	0.1
Dichloromethane	0.005
Di(2-ethylhexyl)adipate	0.4
Dinoseb	0.007
Diquat	0.02
Endothall	0.1
Endrin	0.002
Ethylbenzene	0.7
Fluoride	4.0
Glyphosate	0.7
Hexachlorocyclopentadiene	0.05
Lindane	0.0002
Mercury	0.002
Methoxychlor	0.04
Monochlorobenzene	0.1
Nickel	0.1
Nitrate	10 (as Nitrogen)

Nitrite	1 (as Nitrogen)
Nitrate+Nitrite	10 (as Nitrogen)
Oxamyl	0.2
Picloram	0.5
Selenium	0.05
Simazine	0.004
Styrene	0.1
Toluene	1
1,2,4-Trichlorobenzene	0.07
1,1,1-Trichloroethane	0.2

[1] Atrazine, total chlorinated residue includes atrazine and its metabolites, diaminoatrazine,
diethylatrazine and deisopropylatrazine.

(4) If a contaminant is not detected in a sample and if the limit of detection is higher than the MCLG, the MCLG shall be considered not to have been exceeded.

(5) Notwithstanding any other provisions of this chapter, if a contaminant listed in sub. (2) is detected at a concentration above the MCLG but below the MCL for that contaminant, the following shall apply:

(a) The system owner or operator shall collect a confirmation sample to verify the presence of the contaminant, unless collected by the department.

(b) Based upon verified results and following a determination by the department on the need for further action as specified in par. (c), the system owner or operator shall provide public information to its customers indicating the analytical results achieved and the health effects of ingesting the substance at the concentration found.

(c) The department may require the system owner or operator to prepare and submit a report which does all of the following:

1. Assesses the cause and significance of the problem.
2. Analyzes the cost, effectiveness and feasibility of alternatives for treating the water or developing alternative water sources.

(d) If, based on the conclusions of the report if required under par. (c), the department determines that action is necessary to protect public health, it may require the system owner or operator to treat or replace the water source.

NR 809.09 Applicability of primary maximum contaminant levels to water sources. Except as otherwise allowed in this chapter, no water source exceeding any primary maximum contaminant level in this chapter may be connected to a public water system unless blending or treatment is provided such that the primary maximum contaminant level is not exceeded upon entry to the distribution system.

NR 809.11 Inorganic chemical maximum contaminant levels and BATs. **(1)** APPLICABILITY The following requirements apply to all of the maximum contaminant levels for inorganic contaminants:

(a) The maximum contaminant levels for nitrate and nitrite apply to both community water systems and non-community water systems, except as provided in sub. (3).

(b) The maximum contaminant level for fluoride only applies to community water systems.

(c) The maximum contaminant levels for antimony, arsenic, asbestos, barium, beryllium, cadmium, chromium, cyanide, mercury, nickel, selenium and thallium apply to community water systems and non-transient, non-community water systems.

(d) Compliance with maximum contaminant levels for inorganic chemicals is calculated under s. NR 809.117.

(2) MCLS FOR INORGANICS. The following are the maximum contaminant levels for inorganic contaminants:

Contaminant	**MCL in mg/L**
Antimony	0.006
Arsenic	0.010
Asbestos	7 Million fibers/Liter (longer than 10 um)
Barium	2
Beryllium	0.004
Cadmium	0.005
Chromium	0.1
Cyanide(as free Cyanide)	0.2
Fluoride	4.0
Mercury	0.002
Nickel	0.1
Nitrate	10 (as Nitrogen)
Nitrite	1 (as Nitrogen)
Total Nitrate Nitrite	10 (as Nitrogen)
Selenium	0.05
Thallium	0.002

(3) NITRATE VARIANCES. At the discretion of the department, nitrate as nitrogen levels not to exceed 20 mg/l may be allowed in a non-community water system if the supplier of water demonstrates all of the following to the satisfaction of the department:

(a) The water will not be available to children under 6 months of age.

(b) The non-community water system meets the public notification requirements under s. NR 809.958, including continuous posting of the fact that nitrate as nitrogen levels exceed 10 mg/l and the potential health effects of exposure.

(c) Local and state public health authorities will be notified annually of nitrate as nitrogen levels that exceed 10 mg/l.

(d) A supply of bacteriologically safe drinking water, containing less than 10 mg/l nitrate as nitrogen, is provided for infants under 6 months of age.

(e) No adverse health effects will result.

(4) BEST AVAILABLE TREATMENT. The best available treatment technologies for inorganic contaminants are as follows:

(a) The best available technologies or BATs for achieving compliance with the maximum contaminant levels for the inorganic contaminants listed in sub. (2), except for fluoride, are as follows:

Contaminant	**BAT(s)**
Antimony	2,7
Arsenic[4]	1,2,5,6,7,9,12[5]
Asbestos	2,3,8
Barium	5,6,7,9
Beryllium	1,2,5,6,7
Cadmium	2,5,6,7
Chromium	2,5,6[2],7
Cyanide	5,7,10
Mercury	2[1],4,6[1],7[1]
Nickel	5,6,7
Nitrate	5,7,9
Nitrite	5,7
Selenium	1,2[3],6,7,9
Thallium	1,5

[1]BAT only if influent Hg concentration

[2]BAT for Chromium III only.

[3]BAT for Selenium IV only.

[4]BATs for Arsenic V. Pre-oxidation may be required to convert Arsenic III to Arsenic V.

[5]To obtain high removals, iron to arsenic ratio must be at least 20:1.

Key to BATs in Table:

1 = Activated Alumina
2 = Coagulation/Filtration (not BAT for systems < 500 service connections)
3 = Direct and Diatomite Filtration
4 = Granular Activated Carbon
5 = Ion Exchange
6 = Lime Softening (not BAT for systems < 500 service connections)
7 = Reverse Osmosis
8 = Corrosion Control
9 = Electrodialysis
10 = Oxidation (Chlorine)
11 = Ultraviolet

12 = Oxidation/Filtration

(b) A public water system owner or operator may use an alternative treatment not listed in par. (a) if it is demonstrated to the department, using pilot studies or other means, that the alternative treatment is sufficient to achieve compliance with the MCLs in sub. (2).

(5) SMALL SYSTEM COMPLIANCE TECHNOLOGIES FOR ARSENIC. **(a)** The EPA identifies the following table as the affordable technology, treatment technique, or other means available to water systems serving 10,000 persons or fewer for achieving compliance with the maximum contaminant level for arsenic:

Small System Compliance Technologies[1] for Arsenic[2]

Small system compliance technology	**Affordable for listed small system categories[3]**
Activated Alumina (centralized)	All size categories
Activated Alumina (Point-of-Use)[4]	All size categories
Coagulation/Filtration[5]	501–3,300, 3,301–10,000
Coagulation-assisted Microfiltration	501–3,300, 3,301–10,000
Electrodialysis reversal[6]	501–3,300, 3,301–10,000
Enhanced coagulation/filtration	All size categories
Enhanced lime softening (pH> 10.5)	All size categories
Ion Exchange	All size categories
Lime Softening[5]	501–3,300, 3,301–10,000
Oxidation/Filtration[7]	All size categories
Reverse Osmosis (centralized)[6]	501–3,300, 3,301–10,000
Reverse Osmosis (Point-of-Use)[4]	All size categories

[1] Section 1412(b)(4)(E)(ii) of the Safe Drinking Water Act or SDWA specifies that small system compliance technologies must be affordable and technically feasible for small systems.

[2] Small system compliance technology for Arsenic V. Pre-oxidation may be required to convert Arsenic III to Arsenic V.

[3] Section 1412(b)(4)(E)(ii) of the Safe Drinking Water Act or SDWA specifies 3 categories of small systems: (i) those serving 25 or more, but fewer than 501, (ii) those serving more than 500, but fewer than 3,301, and (iii) those serving more than 3,300, but fewer than 10,001.

[4] When POU or POE devices are used for compliance, programs to ensure proper long-term operation, maintenance, and monitoring must be provided by the water system to ensure adequate performance.

[5] Unlikely to be installed solely for arsenic removal. May require pH adjustment to optimal range if high removals are needed.

[6] Technologies reject a large volume of water—may not be appropriate for areas where water quantity may be an issue.

[7] To obtain high removals, iron to arsenic ratio must be at least 20:1.

(b) The department may allow Point of Use (POU) treatment only if the department determines that treatment prior to entry to the distribution system is not feasible.

NR 809.113 Sample collection and analytical requirements for inorganic contaminants. (1) ANALYTICAL METHODS. Analyses conducted to determine compliance with s. NR 809.11 shall be made in accordance with methods listed in Table A or methods approved by the EPA under Appendix A to Subpart C of Part 141--Alternative Testing Methods Approved for Analyses Under the Safe Drinking Water Act and published in the Federal Register.

TABLE A
Approved Methodology for Primary Inorganic Contaminants

Contaminant	**Methodology[13]**	**EPA**	**ASTM[3]**	**SM[4](18th, 19th ed.)**	**SM[4](20th ed.)**	**SM Online[21]**	**Other**
1. Alkalinity	Titrimetric		D1067–92, 02 B	2320 B	2320 B	2320 B–97	
	Electrometric titration					I–1030–85[5]	
2. Antimony	Inductively Coupled Plasma (ICP)—Mass Spectrometry	200.8[2]					
	Hydride-Atomic Absorption		D3697–92, 02				
	Atomic Absorption; Platform	200.9[2]					
	Atomic Absorption; Furnace			3113 B		3113 B–99	
3. Arsenic[14]	ICP-Mass Spectrometry	200.8[2]					
	Atomic Absorption; Platform	200.9[2]					
	Atomic Absorption; Furnace		D2972–97, 03 C	3113 B		3113 B–99	
	Hydride Atomic Absorption		D1972–97, 03 B	3114 B		3114 B–97	
4. Asbestos	Transmission Electron Microscopy	100.1[9]					

	Transmission Electron Microscopy	100.2[10]					
5. Barium	Inductively Coupled Plasma	200.7[2]		3120 B	3120 B	3120 B–99	
	ICP-Mass Spectrometry	200.8[2]					
	Atomic Absorption; Direct			3111D		3111 D–99	
	Atomic Absorption; Furnace			3113 B		3113 B–99	
6. Beryllium	Inductively Coupled Plasma	200.7[2]		3120 B	3120 B	3120 B–99	
	ICP-Mass Spectrometry	200.8[2]					
	Atomic Absorption; Platform	200.9[2]					
	Atomic Absorption; Furnace		D3645–97, 03 B	3113 B		3113 B–99	
7. Cadmium	Inductively Coupled Plasma	200.7[2]					
	ICP-Mass Spectrometry	200.8[2]					
	Atomic Absorption; Platform	200.9[2]					
	Atomic Absorption; Furnace			3113 B		3113 B–99	
8. Calcium	EDTA titrimetric		D511–93, 03 A	3500–Ca D	3500–Ca B	3500–Ca B–97	
	Atomic Absorption; Direct Aspiration		D511–93, 03 B	3111 B		3111 B–99	
	Inductively Coupled Plasma	200.7[2]		3120 B	3120 B	3120 B–99	
	Ion		D6919–03				

	Chromatography						
9. Chromium	Inductively Coupled Plasma	200.7[2]		3120 B	3120 B	3120 B–99	
	ICP-Mass Spectrometry	200.8[2]					
	Atomic Absorption; Platform	200.9[2]					
	Atomic Absorption; Furnace			3113 B		3113 B–99	
10. Copper	Atomic Absorption; Furnace		D1688–95, 02 C	3113 B		3113 B–99	
	Atomic Absorption; Direct Aspiration		D1688–95, 02 A	3111 B		3111 B–99	
	Inductively Coupled Plasma	200.7[2]		3120 B	3120 B	3120 B–99	
	ICP-Mass spectrometry	200.8[2]					
	Atomic Absorption; Platform	200.9[2]					
11. Conductivity	Conductance		D1125–95 (Reapproved 1999) A	2510 B	2510 B	2510 B–97	
12. Cyanide	Manual Distillation followed by		D2036–98 A	4500–CN^-C	4500–CN^-C		
	Spectrophotometric, Amenable		D2036–98 B	4500–CN^-G	4500–CN^-G	4500–CN^-G–99	
	Spectro-photometric Manual		D2036–98 A	4500–CN^-E	4500–CN^-E	4500–CN^-E–99	I–3300–85[5]
	Spectro-photometric Semi-automated	335.4[6]					
	Selective Electrode			4500–CN^-F	4500–CN^-F	4500–CN^-F–99	
	UV, Distillation,						Kelada–

	Spectrophotometric						01[16]
	Micro Distillation, Flow Injection, Spectrophotometric						QuikChem 10–204–00–1–X[17]
	Ligand Exchange and Amperometry[20]		D6888–04				OIA–1677, DW[19]
13. Fluoride	Ion Chromatography	300.0[6], 300.1[18]	D4327–97, 03	4110 B	4110 B	4110 B–00	
	Manual Distill.; Color. SPADNS			4500–F⁻B, D	4500–F⁻B, D	4500–F⁻B, D–97	
	Manual Electrode		D1179–93, 99 B	4500–F⁻C	4500–F⁻C	4500–F⁻C–97	
	Automated Electrode						380–75WE[11]
	Automated Alizarin			4500–F⁻E	4500–F⁻E	4500–F⁻E–97	129–71W[11]
	Capillary Ion Electrophoresis						D6508, Rev. 2[22]
14. Lead	Atomic Absorption; Furnace		D3559–96, 03 D	3113 B		3113 B–99	
	ICP–Mass spectrometry	200.8[2]					
	Atomic Absorption; Platform	200.9[2]					
	Differential Pulse Anodic Stripping Voltametry						Method 1001[15]
15. Magnesium	Atomic Absorption		D511–93, 03 B	3111 B		3111 B–99	
	ICP	200.7[2]		3120 B	3120 B	3120 B–99	
	Complexation Titrimetric		D511–93, 03 A	3500–Mg E	3500–Mg B	3500–Mg B–97	

	Methods						
	Ion Chromatography		D6919–03				
16. Mercury	Manual, Cold Vapor	245.1[2]	D3223–97, 02	3112 B		3112 B–99	
	Automated, Cold Vapor	245.2[1]					
	ICP–Mass Spectrometry	200.8[2]					
17. Nickel	Inductively Coupled Plasma	200.7[2]		3120 B	3120 B	3120 B–99	
	ICP–Mass Spectrometry	200.8[2]					
	Atomic Absorption; Platform	200.9[2]					
	Atomic Absorption; Direct			3111 B		3111 B–99	
	Atomic Absorption; Furnace			3113 B		3113 B–99	
18. Nitrate	Ion Chromatography	300.0[6]300.1[18]	D4327–97, 03	4110 B	4110 B	4110 B–00	B–1011[8]
	Automated Cadmium Reduction	353.2[6]	D3867–90 A	4500–NO_3^-F	4500–NO_3^-F	4500–NO_3^-F–00	
	Ion Selective Electrode			4500–NO_3^-D	4500–NO_3^-D	4500–NO_3^-D–00	601[7]
	Manual Cadmium Reduction		D3867–90 B	4500–NO_3^-E	4500–NO_3^-E	4500–NO_3^-E–00	
	Capillary Ion Electrophoresis						D6508, Rev. 2[22]
19. Nitrite	Ion Chromatography	300.0[6]300.1[18]	D4327–97, 03	4110 B	4110 B	4110 B–00	B–1011[8]
	Automated Cadmium Reduction	353.2[6]	D3867–90 A	4500–NO_3^-F	4500–NO_3^-F	4500–NO_3^-F–00	
	Manual Cadmium		D3867–90 B	4500–NO_3^-E	4500–NO_3^-E	4500–NO_3^-E–	

	Reduction					00	
	Spectrophotometric			4500–NO_2^-B	4500–NO_2^-B	4500–NO_2^-B–00	
	Capillary Ion Electrophoresis						D6508, Rev. 2[22]
20. Ortho-phosphate[1,2]	Colorimetric, Automated, Ascorbic Acid	365.1[6]		4500–P F	4500–P F		
	Colorimetric, ascorbic acid, single reagent		D515–88 A	4500–P E	4500–P E		
	Colorimetric Phosphomolybdate;						I–1601–85[5]
	Automated-segmented flow;						I–2601–90[5]
	Automated Discrete						I–2598–85[5]
	Ion Chromatography	300.0[6] 300.1[18]	D4327–97, 03	4110 B	4110 B	4110 B–00	
	Capillary Ion Electrophoresis						D6508, Rev. 2[22]
21. pH	Electrometric	150.1, 150.2[1]	D1293–95, 99	4500–H^+B	4500–H^+B	4500–H^+B–00	
22. Selenium	Hydride-Atomic Absorption		D3859–98, 03 A	3114 B		3114 B–97	
	ICP–Mass Spectrometry	200.8[2]					
	Atomic Absorption; Platform	200.9[2]					
	Atomic Absorption; Furnace		D3859–98, 03 B	3113 B		3113 B–99	
23. Silica	Colorimetric, Molybdate Blue						I–1700–85[5]
	Automated-segmented Flow						I–2700–85[5]
	Colorimetric		D859–94, 00				
	Molybdosilicate			4500–Si	4500–	4500–	

				D	SiO2 C	SiO2 C–97	
	Heteropoly blue			4500–Si E	4500–SiO2 D	4500–SiO2 D–97	
	Automated for Molybdate-reactive Silica			4500–Si F	4500–SiO2 E	4500–SiO2 E–97	
	Inductively Coupled Plasma	200.7[2]		3120 B	3120 B	3120 B–99	
24. Sodium	Inductively Coupled Plasma	200.7[2]					
	Atomic Absorption; Direct Aspiration			3111 B		3111 B–99	
	Ion Chromatography		D6919–03				
25. Temperature	Thermometric			2550	2550	2550–00	
26. Thallium	ICP–Mass Spectrometry	200.8[2]					
	Atomic Absorption; Platform	200.9[2]					
27. Turbidity	Nephelometric	180.1[23]		2130 B			
	Great Lakes Instrument						Instruments Method 2[24]

The procedures shall be done in accordance with the documents listed below. The incorporation by reference of the following documents listed in footnotes 1–11, 16–20, and 22–23 was approved by the Director of the Federal Register in accordance with 5 U.S.C. 552(a) and 1 CFR Part 51. Copies of the documents may be obtained from the sources listed below. Information regarding obtaining these documents can be obtained from the Safe Drinking Water Hotline at 800–426–4791. Documents may be inspected at EPA's Drinking Water Docket, EPA West, 1301 Constitution Avenue, NW., Room 3334, Washington, DC 20460 (Telephone: 202–566–2426); or at the National Archives and Records Administration (NARA). For information on the availability of this material at NARA, call 202–741–6030, or go to:

http://www.archives.gov/federal_register/code_of_federal_regulations/ibr_locations.html
.

[1]"Methods for Chemical Analysis of Water and Wastes," EPA/600/4–79/020, March 1983. Available at NTIS, PB84–128677.

[2]"Methods for the Determination of Metals in Environmental Samples—Supplement I," EPA/600/R–94/111, May 1994. Available at NTIS, PB95–125472.

[3] *Annual Book of ASTM Standards,* 1994, 1996, 1999, or 2003, Vols. 11.01 and 11.02, ASTM International; any year containing the cited version of the method may be used. The previous versions of D1688–95A, D1688–95C (copper), D3559–95D (lead), D1293–95 (pH), D1125–91A (conductivity) and D859–94 (silica) are also approved. These previous versions D1688–90A, C; D3559–90D, D1293–84, D1125–91A and D859–88, respectively are located in the *Annual Book of ASTM Standards,* 1994, Vol. 11.01. Copies may be obtained from ASTM International, 100 Barr Harbor Drive, West Conshohocken, PA 19428.

[4] *Standard Methods for the Examination of Water and Wastewater,* 18th edition (1992), 19th edition (1995), or 20th edition (1998). American Public Health Association, 1015 Fifteenth Street, NW., Washington, DC 20005. The cited methods published in any of these three editions may be used, except that the versions of 3111 B, 3111 D, 3113 B and 3114 B in the 20th edition may not be used.

[5]Method I–2601–90, Methods for Analysis by the U.S. Geological Survey National Water Quality Laboratory—Determination of Inorganic and Organic Constituents in Water and Fluvial Sediment, Open File Report 93–125, 1993; For Methods I–1030–85; I–1601–85; I–1700–85; I–2598–85; I–2700–85; and I–3300–85 See Techniques of Water Resources Investigation of the U.S. Geological Survey, Book 5, Chapter A–1, 3rd edition., 1989; Available from Information Services, U.S. Geological Survey, Federal Center, Box 25286, Denver, CO 80225–0425.

[6]"Methods for the Determination of Inorganic Substances in Environmental Samples," EPA/600/R–93/100, August 1993. Available at NTIS, PB94–120821.

[7]The procedure shall be done in accordance with the Technical Bulletin 601 " Standard Method of Test for Nitrate in Drinking Water," July 1994, PN 221890–001, Analytical Technology, Inc. Copies may be obtained from ATI Orion, 529 Main Street, Boston, MA 02129.

[8]Method B–1011, "Waters Test Method for Determination of Nitrite/Nitrate in Water Using Single Column Ion Chromatography," August 1987. Copies may be obtained from Waters Corporation, Technical Services Division, 34 Maple Street, Milford, MA 01757, Telephone: 508/482–2131, Fax: 508/482–3625.

[9]Method 100.1, “Analytical Method For Determination of Asbestos Fibers in Water,” EPA/600/4–83/043, EPA, September 1983. Available at NTIS, PB83–260471.

[10]Method 100.2, “Determination of Asbestos Structure Over 10-µm In Length In Drinking Water,” EPA/600/R–94/134, June 1994. Available at NTIS, PB94–201902.

[11]Industrial Method No. 129–71W, “Fluoride in Water and Wastewater,” December 1972, and Method No. 380–75WE, “Fluoride in Water and Wastewater,” February 1976, Technicon Industrial Systems. Copies may be obtained from Bran & Luebbe, 1025 Busch Parkway, Buffalo Grove, IL 60089.

[12]Unfiltered, no digestion or hydrolysis.

[13]Because MDLs reported in EPA Methods 200.7 and 200.9 were determined using a 2x preconcentration step during sample digestion, MDLs determined when samples are analyzed by direct analysis (*i.e.* , no sample digestion) will be higher. For direct analysis of cadmium and arsenic by Method 200.7, and arsenic by Method 3120 B, sample preconcentration using pneumatic nebulization may be required to achieve lower detection limits. Preconcentration may also be required for direct analysis of antimony, lead, and thallium by Method 200.9; antimony and lead by Method 3113 B; and lead by Method D3559–90D, unless multiple in-furnace depositions are made.

[14]If ultrasonic nebulization is used in the determination of arsenic by Methods 200.7, 200.8, or SM 3120 B, the arsenic must be in the pentavalent state to provide uniform signal response. For Methods 200.7 and 3120 B, both samples and standards must be diluted in the same mixed acid matrix concentration of nitric and hydrochloric acid with the addition of 100 µL of 30% hydrogen peroxide per 100 mL of solution. For direct analysis of arsenic with Method 200.8 using ultrasonic nebulization, samples and standards must contain 1 mg/L of sodium hypochlorite.

[15]The description for Method Number 1001 for lead is available from Palintest, LTD, 21 Kenton Lands Road, P.O. Box 18395, Erlanger, KY 41018. Or from the Hach Company, P.O. Box 389, Loveland, CO 80539.

[16]The description for the Kelada-01 Method, “Kelada Automated Test Methods for Total Cyanide, Acid Dissociable Cyanide, And Thiocyanate,” Revision 1.2, August 2001, EPA # 821–B–01–009 for cyanide is available from the National Technical Information Service (NTIS), PB 2001–108275, 5285 Port Royal Road, Springfield, VA 22161. The toll free telephone number is 800–553–6847.

Note:A 450–W UV lamp may be used in this method instead of the 550–W lamp specified if it provides performance within the quality control (QC) acceptance criteria of the method in a given instrument. Similarly, modified flow cell configurations and flow conditions may be used in the method, provided that the QC acceptance criteria are met.

[17]The description for the QuikChem Method 10–204–00–1–X, "Digestion and distillation of total cyanide in drinking and wastewaters using MICRO DIST and determination of cyanide by flow injection analysis," Revision 2.1, November 30, 2000, for cyanide is available from Lachat Instruments, 6645 W. Mill Rd., Milwaukee, WI 53218. Telephone: 414–358–4200.

[18]"Methods for the Determination of Organic and Inorganic Compounds in Drinking Water," Vol. 1, EPA 815–R–00–014, August 2000. Available at NTIS, PB2000–106981.

[19]Method OIA–1677, DW "Available Cyanide by Flow Injection, Ligand Exchange, and Amperometry," January 2004. EPA–821–R–04–001, Available from ALPKEM, A Division of OI Analytical, P.O. Box 9010, College Station, TX 77842–9010.

[20]Sulfide levels below those detected using lead acetate paper may produce positive method interferences. Test samples using a more sensitive sulfide method to determine if a sulfide interference is present, and treat samples accordingly.

[21]Standard Methods Online are available at *http://www.standardmethods.org* . The year in which each method was approved by the Standard Methods Committee is designated by the last two digits in the method number. The methods listed are the only online versions that may be used.

[22]Method D6508, Rev. 2, "Test Method for Determination of Dissolved Inorganic Anions in Aqueous Matrices Using Capillary Ion Electrophoresis and Chromate Electrolyte," available from Waters Corp, 34 Maple St, Milford, MA, 01757, Telephone: 508/482–2131, Fax: 508/482–3625.

[23] "Methods for the Determination of Inorganic Substances in Environmental Samples", EPA−600/R−93−100, August 1993, Available at NTIS, PB94−121811

[24] GLI Method 2, "Turbidity", November 2, 1992, Great Lakes Instruments, Inc., 8855 North 55th Street, Milwaukee, Wisconsin 53223.

(2) SAMPLE COLLECTION. Sample collection for the inorganic contaminants under s. NR 809.11(2) shall be conducted using the sample preservation, containers and maximum holding time procedures specified in Table B.

TABLE B

Sample Preservation, Containers and Maximum Holding Times for Inorganic Parameters

Parameter	**Preservation[1]**	**Container[2]**	**Holding Time[3]**
METALS			
Aluminum	HNO_3	P or G	6 months
Antimony	HNO_3	P or G	6 months
Arsenic	Conc. HNO_3 to pH<2	P or G	6 months
Barium	HNO_3	P or G	6 months

Beryllium	HNO_3	P or G	6 months
Cadmium	HNO_3	P or G	6 months
Copper	HNO_3	P or G	6 months
Chromium	HNO_3	P or G	6 months
Iron	HNO_3	P or G	6 months
Lead	HNO_3	P or G	6 months
Manganese	HNO_3	P or G	6 months
Mercury	HNO_3	P or G	28 days
Nickel	HNO_3	P or G	6 months
Selenium	HNO_3	P or G	6 months
Silver	HNO_3	P or G	6 months
Thallium	HNO_3	P or G	6 months
Zinc	HNO_3	P or G	6 months
OTHER PARAMETERS			
Asbestos	Cool, 4°C	P or G	48 hours[4]
Bromate	Ethylenediamine	P or G	28 days
Chloride	None	P or G	28 days
Chlorite	50 mg/L EDA, Cool to 4°C	P or G	14 days
Color	Cool, 4°C	P or G	48 hours
Cyanide	Cool, 4°C+NaOH to pH>12	P or G	14 days
Fluoride	None	P or G	28 days
Foaming Agents	Cool, 4°C	P or G	48 hours
Nitrate (as N)			
Chlorinated	Cool, 4°C	P or G	14 days
Non-Chlorinated	Cool, 4°C	P or G	48 hours[5]
Nitrite (as N)	Cool, 4°C	P or G	48 hours
Nitrate + Nitrite[6]	Conc. H_2SO_4 to pH<2	P or G	14 days
Odor	Cool, 4°C	G	48 hours
pH	None	P or G	Analyze Immediately
Solids (TDS)	Cool, 4°C	P or G	7 days
Sulfate	Cool, 4°C	P or G	28 days
Turbidity	Cool, 4°C	P or G	48 hours

[1] If HNO_3 cannot be used because of shipping restrictions, sample may be initially preserved by icing and immediately shipping it to the laboratory. Upon receipt in the laboratory, the sample must be acidified with conc HNO_3 to pH < 2. At time of analysis, sample container should be thoroughly rinsed with 1:1 HNO_3; washings should be added to sample.

[2] P = plastic, hard or soft. G = glass, hard or soft.

[3] In all cases, samples should be analyzed as soon after collection as possible.

[4] Instructions for containers, preservation procedures and holding times as specified in Method

100.2 must be adhered to for all compliance analyses including those conducted with Method 101.1.

[5] If the sample is chlorinated, the holding time for an unacidified sample kept at 4°C is extended to 14 days.

[6] Nitrate-nitrite refers to a measurement of total nitrate.

(3) LABORATORY CERTIFICATION. Analyses under this section shall only be conducted by laboratories that have received certification under ch. NR 149 or approval by EPA.

(a) To receive certification to conduct analyses for antimony, arsenic, asbestos, barium, beryllium, cadmium, cyanide, fluoride, mercury, nickel, nitrate, nitrite, selenium and thallium, a laboratory shall carry out annual analyses of performance evaluation samples approved by the department or EPA.

(b) For each contaminant that has been included in the performance evaluation sample and for each method for which a laboratory desires certification, the laboratory shall achieve quantitative results that are within the following acceptance limits:

Contaminant	**Acceptance limit**
Antimony	±30% at ≥0.006 mg/L
Arsenic	±30% at ≥0.003 mg/L
Asbestos	2 standard deviations based on study statistics
Barium	±15% at ≥0.15 mg/L
Beryllium	±15% at ≥0.001 mg/L
Cadmium	±20% at ≥0.002 mg/L
Chromium	±15% at ≥0.01 mg/L
Cyanide	±25% at ≥0.1 mg/L
Fluoride	±10% at ≥1 to 10 mg/L
Mercury	±30% at ≥0.0005 mg/L
Nickel	±15% at ≥0.01 mg/L
Nitrate	±10% at ≥0.4 mg/L
Nitrite	±15% at ≥0.4 mg/L
Selenium	±20% at ≥0.01 mg/L
Thallium	±30% at ≥0.002 mg/L

(4) COMPOSITE SAMPLING. Composite sampling for inorganic contaminants shall meet the following requirements: (a) The department may reduce the total number of samples a system is required to analyze by allowing the use of compositing. Compositing shall only be permitted for entry points within a single system. Composite samples from a maximum of 5 entry points are allowed, provided that the detection limit of the method used for analysis is less than one-fifth of the MCL.

(b) Compositing of samples shall be done in the laboratory.

(c) If the concentration in the composite sample is greater than or equal to one-fifth of the MCL of any inorganic contaminant, a follow-up sample shall be taken from each entry point included in the composite and analyzed within 14 days. These samples shall

be analyzed for the contaminants which exceeded one-fifth of the MCL in the composite sample.

(d) If duplicates of the original sample taken from each entry point used in the composite are available and the holding time listed in sub. (2) Table B has not been exceeded, the system may use these instead of resampling. The duplicates shall be analyzed and the results reported to the department within 14 days of the composite analysis.

(e) The following are detection limits for each analytical method and MCLs for inorganic contaminants specified in this section and s. NR 809.11:

Table C

Detection Limits for Inorganic Contaminants

Contaminant	**MCL (mg/l)**	**Methodology**	**Detection limit (mg/l)**
Antimony	0.006	Atomic Absorption; Furnace	0.003
		Atomic Absorption; Platform	0.0008[5]
		ICP-Mass Spectrometry	0.0004
		Hydride-Atomic Absorption	0.001
Arsenic	0.010	Atomic Absorption; Furnace	0.001
		Atomic Absorption; Platform—Stabilized Temperature	0.0005[6]
		Atomic Absorption; Gaseous Hydride	0.001
		ICP-Mass Spectrometry	0.0014[7]
Asbestos	7 MFL[1]	Transmission Electron Microscopy	0.01 MFL
Barium	2	Atomic Absorption; furnace technique	0.002
		Atomic Absorption; direct aspiration	0.1
		Inductively Coupled Plasma	0.002 (0.001)
Beryllium	0.004	Atomic Absorption; Furnace	0.0002
		Atomic Absorption; Platform	0.00002[5]
		Inductively Coupled Plasma[2]	0.0003
		ICP-Mass Spectrometry	0.0003
Cadmium	0.005	Atomic Absorption; furnace technique	0.0001
		Inductively Coupled Plasma	0.001
Chromium	0.1	Atomic Absorption; furnace technique	0.001
		Inductively Coupled Plasma	0.007 (0.001)
Cyanide	0.2	Distillation, Spectrophotometric[3]	0.02
		Distillation, Automated, Spectrophotometric[3]	0.005

		Distillation, Amenable, Spectrophotometric[4]	0.02
		Distillation, Selective Electrode[3, 4]	0.05
		UV, Distillation, Spectrophotometric[9]	0.0005
		Micro Distillation, Flow Injection, Spectrophotometric[3]	0.0006
		Ligand Exchange with Amperometry[4]	0.0005
Mercury	0.002	Manual Cold Vapor Technique	0.0002
		Automated Cold Vapor Technique	0.0002
Nickel	xl	Atomic Absorption; Furnace	0.001
		Atomic Absorption; Platform	0.0006[5]
		Inductively Coupled Plasma[2]	0.005
		ICP-Mass Spectrometry	0.0005
Nitrate	10 (as N)	Manual Cadmium Reduction	0.01
		Automated Hydrazine Reduction	0.01
		Automated Cadmium Reduction	0.05
		Ion Selective Electrode	1
		Ion Chromatography	0.01
		Capillary Ion Electrophoresis	0.076
Nitrite	1 (as N)	Spectrophotometric	0.01
		Automated Cadmium Reduction	0.05
		Manual Cadmium Reduction	0.01
		Ion Chromatography	0.004
		Capillary Ion Electrophoresis	0.103
Selenium	0.05	Atomic Absorption; furnace	0.002
		Atomic Absorption; gaseous hydride	0.002
Thallium	0.002	Atomic Absorption; Furnace	0.001
		Atomic Absorption; Platform	0.0007[5]
		ICP-Mass Spectrometry	0.0003

[1]MFL = million fibers per liter >10 µm.

[2]Using a 2X preconcentration step as noted in Method 200.7. Lower MDLs may be achieved when using a 4X preconcentration.

[3]Screening method for total cyanides.

[4]Measures “free” cyanides when distillation, digestion, or ligand exchange is omitted.

[5]Lower MDLs are reported using stabilized temperature graphite furnace atomic absorption.

[6]The MDL reported for EPA method 200.9 (Atomic Absorption; Platform—Stablized Temperature) was determined using a 2x concentration step during sample digestion. The MDL determined for samples analyzed using direct analyses (*i.e.* , no sample digestion) will be higher. Using multiple depositions, EPA 200.9 is capable of obtaining MDL of 0.0001 mg/L.

[7]Using selective ion monitoring, EPA Method 200.8 (ICP-MS) is capable of obtaining a MDL of 0.0001 mg/L.

[8]Measures total cyanides when UV-digestor is used, and "free" cyanides when UV-digestor is bypassed.

NR 809.115 Monitoring requirements for inorganic contaminants. (1) GENERAL. Monitoring for the contaminants listed in s. NR 809.11(2) for the purpose of determining compliance with the maximum contaminant levels shall be conducted as follows:

(a) Groundwater sources shall be sampled under normal operating conditions at every entry point to the distribution system which is representative of each well being used after treatment, herein called the sampling point, beginning in the initial compliance period. Each sample shall be taken at the same sampling point unless conditions make another sampling point more representative of each source or treatment plant.

(b) Surface water sources or combined surface water and groundwater sources shall be sampled under normal operating conditions, at every entry point to the distribution system after any application of treatment or in the distribution system at a point which is representative of each source after treatment herein called a sampling point, beginning in the initial compliance period. Each sample shall be taken at the same sampling point unless conditions make another sampling point more representative of each source or treatment plant.

(c) If a system draws water from more than one source and the sources are combined before distribution, the system shall be sampled at an entry point to the distribution system during periods of normal operating conditions when water is representative of all sources being used.

(d) All new systems or systems that use a new source of water that begin operation after January 22, 2004 shall demonstrate compliance with the MCLs specified in s. NR 809.11 (2) in accordance with the requirements in this section. The system shall also comply with the initial sampling frequencies specified by the department to ensure a system can demonstrate compliance with the MCLs. Routine and increased monitoring frequencies shall be conducted in accordance with the requirements of this section.

(2) MONITORING FREQUENCY FOR ASBESTOS. The frequency of monitoring to determine compliance with the maximum contaminant level for asbestos specified in s. NR 809.11 (2) shall be conducted as follows:

(a) *Initial and routine monitoring.* Each community and non-transient, non-community water system is required to monitor for asbestos during the first 3-year compliance period

of each 9-year compliance cycle beginning in the compliance period starting January 1, 1993, Unless a waiver is granted under par. (d).

(b) W*aiver request*. If the owner or operator of the system believes it is not vulnerable to either asbestos contamination in its source water or due to corrosion of asbestos-cement pipe, or both, it may apply to the department for a waiver of the monitoring requirement in par. (a).

(c) *Waiver evaluation.* The department may grant a waiver based on a consideration of all the following factors:

1. Potential asbestos contamination of the water source.
2. The use of asbestos-cement pipe for finished water distribution.
3. The corrosive nature of the water.

(d) *Waiver conditions.* The department may grant a waiver if the conditions in par. (b) and (c) are satisfied. A waiver remains in effect until the completion of the 3-year compliance period. Systems not receiving a waiver shall monitor in accordance with the provisions of par. (a).

(e) *Monitoring frequency with waiver.* If the department grants the waiver, the system is not required to monitor.

(f) *Sample location for vulnerable systems.*

1. A system vulnerable to asbestos contamination due solely to corrosion of asbestos-cement pipe shall take one sample at a tap served by asbestos-cement pipe and under conditions where asbestos contamination is most likely to occur.

2. A system vulnerable to asbestos contamination due both to its source water supply and corrosion of asbestos-cement pipe shall take one sample at a tap served by asbestos-cement pipe and under conditions where asbestos contamination is most likely to occur.

(g) *Sample frequency for system with vulnerable source water.* A system vulnerable to asbestos contamination due solely to source water shall monitor in accordance with the provisions in par. (a).

(h) *Monitoring when an MCL is exceeded*. A system which exceeds the MCL as determined in s. NR 809.117 shall monitor quarterly beginning in the next quarter after the violation occurred. The department may decrease the quarterly monitoring requirement to one sample as specified in par. (a) if the department has determined that the system is reliably and consistently below the maximum contaminant level. In no case may the department make this determination unless a groundwater system takes a minimum of 2 quarterly samples and a surface water system or a combined surface water and groundwater system takes a minimum of 4 quarterly samples.

(i) *Grandfathered data.* If monitoring data collected after January 1, 1990 is generally consistent with the requirements of this subsection, then the department may allow system owners to use that data to satisfy the monitoring requirement for the initial compliance period beginning January 1, 1993.

(3) MONITORING FREQUENCY FOR MCLS OTHER THAN ASBESTOS, NITRATE, AND NITRITE. The frequency of monitoring for each community and non-transient, non-community water system to determine compliance with the MCLs specified in s. NR 809.11 (2) for antimony, arsenic, barium, beryllium, cadmium, chromium, cyanide, fluoride, mercury, nickel, selenium and thallium shall be conducted as follows:

(a) *Initial monitoring.* New systems or systems with new sources shall demonstrate compliance with the MCLs listed under s. NR 809.11(2) for antimony, arsenic, barium, beryllium, cadmium, chromium, cyanide, fluoride, mercury, nickel, selenium and thallium prior to initiating water service. If a waiver from cyanide monitoring has been granted under par. (c) cyanide is not required to be sampled for in the initial monitoring.

(b) *Routine monitoring.* Groundwater sources shall be sampled at each sampling point during each compliance period as determined by the department. Suppliers of water having surface water sources or combined surface water and groundwater sources shall take one sample annually at each sampling point.

(c) *Waiver request.* The system owner or operator may apply to the department for a waiver from the monitoring frequencies specified in par. (b). Systems that use a new water source are not eligible for a waiver until monitoring from the new source has been conducted in at least three compliance periods except that the department may grant a waiver for monitoring of cyanide beginning with initial monitoring, provided the system is not vulnerable to contamination because there is no industrial source of cyanide present.

(d) *Waiver evaluation.* In determining the appropriate reduced monitoring frequency, the department shall consider all of the following:

1. Reported concentrations from all previous monitoring.
2. The degree of variation in reported concentrations.
3. Other factors which may affect contaminant concentrations such as changes in groundwater pumping rates, changes in the system's configuration, changes in the system's operating procedures, or changes in stream flows or characteristics.

(e) *Waiver conditions*.. The department may grant a waiver if surface water systems have monitored annually for at least 3 years and groundwater systems have conducted monitoring in at least three compliance periods. At least one of the 3 samples shall have been taken since January 1, 1990. Both surface and groundwater systems shall demonstrate that all previous analytical results were less than the maximum contaminant level. Systems that use a new water source are not eligible for a waiver until monitoring from the new source has been conducted in at least three compliance periods. A condition of the waiver shall be the collection of a minimum of one sample while the waiver is effective. The term during which the waiver is effective may not exceed 9 years.

(f) *Monitoring frequency when an MCL has been exceeded.* Systems which exceed the MCLs in s. NR 809.11(2) shall be monitored quarterly beginning in the next quarter after the violation occurred. The department may decrease the quarterly monitoring requirement to the frequencies specified in pars. (a) and (b) if the department has determined that the system is reliably and consistently below the maximum contaminant level. In no case may the department make this determination unless a groundwater system takes a minimum of 2 quarterly samples and a surface water system takes a minimum of 4 quarterly samples.

(4) MONITORING FREQUENCY FOR NITRATE. The frequency of monitoring for all public water systems to determine compliance with the MCL for nitrate specified in s. NR 809.11 (2) shall be conducted as follows:

(a) *Initial monitoring.* New systems or systems with new sources shall demonstrate compliance with the MCLs listed under s. NR 809.11(2) for nitrate prior to initiating water service.

(b) *Routine monitoring.* Each community water system and non-community water system shall monitor according to the following:

1. Community water systems and non-transient non-community water systems served by groundwater shall monitor annually.

2. Community water systems and non-transient non-community water systems served by surface water shall monitor quarterly.

3. Transient non-community water systems shall monitor annually.

(c) *Increased monitoring due to detection at one-half the MCL and greater*. For community and non-transient non-community water systems, the repeat monitoring frequency for groundwater systems shall be quarterly for at least one year following any one sample in which the concentration is greater than or equal to 5 mg/L nitrate as nitrogen. The department may reduce a groundwater system's sampling frequency to annual after 4 consecutive quarterly samples are reliably and consistently less than the MCL.

(d) *Timing of samples after increased monitoring is ended.* After quarterly sampling is completed, any community or non-transient non- community water system which is allowed to resume routine monitoring, under par. (b), shall take subsequent samples during the quarter which previously resulted in the highest analytical result.

(e) *Reduction of quarterly monitoring for surface water systems.* The department may reduce a surface water system's sampling frequency to annual if all analytical results from 4 consecutive quarters are less than 5 mg/L nitrate as nitrogen. A surface water system shall return to quarterly monitoring if any one sample is greater than or equal to 5 mg/L nitrate.

(f) *Monitoring if an MCL is exceeded.* Where nitrate sampling results indicate an exceedance of the MCL, the system shall take a confirmation sample as required under sub. (6)(b)

(5) MONITORING FREQUENCY FOR NITRITE. The frequency of monitoring for all public water systems to determine compliance with the MCL for nitrite specified in s. NR 809.11 (2) shall be conducted as follows:

(a) *Initial monitoring.* New systems or systems with new sources shall demonstrate compliance with the MCLs listed under s. NR 809.11(2) for nitrite prior to initiating water service.

(b) *Routine monitoring.* After the initial sample, systems where an analytical result for nitrite is less than 0.5 mg/L nitrate as nitrogen shall monitor at the frequency specified by the department. For community and non-transient non-community water systems shall sample at the same frequency as monitoring required under sub. (3).

(c) *Increased monitoring due to detection at one-half the MCL and greater.* The repeat monitoring frequency shall be quarterly for at least one year following any one sample in which the concentration of nitrite is greater than or equal to 0.5 mg/L nitrite as nitrogen. The department may reduce the sampling frequency to annual after determining the concentration is reliably and consistently less than the MCL. Each subsequent annual sample shall be taken during the quarter which previously resulted in the highest analytical result.

(d) *Monitoring if an MCL is exceeded.* If nitrite sampling results indicate an exceedance of the MCL, the system shall take a confirmation sample as required under sub. (6)(b).

(6) CONFIRMATION SAMPLES. The collection of confirmation samples shall comply with the following requirements:

(a) *Department required confirmation samples.* The department may require the collection of a confirmation sample where sample results indicate an exceedance of the MCL for antimony, arsenic, asbestos, barium, beryllium, cadmium, chromium, cyanide, fluoride, mercury, nickel, selenium or thallium. The confirmation sample shall be collected as soon as possible after the initial sample results were received, but not exceeding 2 weeks, at the same entry point.

(b) *Mandatory confirmation samples.* If nitrate or nitrite sampling results indicate an exceedance of the MCL, the system shall take a confirmation sample within 24 hours of the system's receipt of notification of the analytical results of the first sample. Systems unable to comply with the 24-hour sampling requirement shall immediately notify the consumers served by the public water system in accordance with subch. VII and meet other Tier 1 public notification requirements under subch. VII. Systems exercising this option shall take and analyze a confirmation sample within 2 weeks of notification of the analytical results of the first sample.

(c) *Averaging of confirmation samples.* If a confirmation sample is required for any contaminant, the results of the original and the confirmation sample shall be averaged. The resultant average shall be used to determine the system's compliance in accordance with s. NR 809.117 (1).

(7) SAMPLING FREQUENCY. The department may require more frequent monitoring than specified in subs. (2), (3), (4) and (5) and may require confirmation samples for positive and negative results at its discretion.

(8) INCREASED MONITORING. Systems may apply to the department to conduct more frequent monitoring than the minimum monitoring frequencies specified in this section.

(9) DESIGNATED SAMPLING TIME. Each public water system shall monitor during the month, quarter or year designated by the department during each compliance period for all monitoring required under subs. (2), (3), (4) and (5).

(10) SAMPLING ERRORS. The department may delete results of obvious sampling errors, or may require the collection of additional samples to determine whether the result is or is not in error.

NR 809.117 Compliance requirements for inorganic contaminants.

(1) COMPLIANCE DETERMINATIONS. Compliance for inorganic contaminants shall be determined based on all of the following:

(a) Compliance with s. NR 809.11 shall be determined based on the analytical results obtained at each entry point. Any contaminant listed in s. NR 809.11 which is detected shall be quantified.

(b) For systems which are conducting monitoring more frequently than annually, compliance with the MCLs for antimony, arsenic, asbestos, barium, beryllium, cadmium, chromium, cyanide, fluoride, mercury, nickel, selenium or thallium is determined by a running annual average at each entry point. If the average at any sampling point is greater than the MCL, then the system is out of compliance. If any one or more samples would cause the annual average to exceed an MCL, then the system is out of compliance immediately. Any sample below the reported method detection limit shall be calculated at zero for the purpose of determining the annual average. If a system fails to collect the

required number of samples, compliance shall be based on the total number of samples collected.

(c) For systems which are monitoring annually, or less frequently, the system is out of compliance with the MCL for antimony, arsenic, asbestos, barium, beryllium, cadmium, chromium, cyanide, fluoride, mercury, nickel, selenium or thallium if the level of a contaminant at any entry point is greater than the MCL. If a confirmation sample is required by the department, compliance shall be based on the average of the 2 samples. If a system fails to collect the required number of samples, compliance shall be based on the total number of samples collected.

(d) Compliance with the MCLs for nitrate, nitrite or combined nitrate and nitrite is determined based on one sample if the levels of these contaminants are below the MCLs. If the levels exceed a MCL in the initial sample, a confirmation sample is required in accordance with s. NR 809.115(6)(b). Compliance shall be determined based on the average of the initial and confirmation samples.

(e) Arsenic sampling results shall be reported to the nearest 0.001 mg/L.

(f) Systems remain out of compliance with the MCLs for nitrate, nitrite, or combined nitrate and nitrite until the results of 4 consecutive quarterly samples are less than the MCL. The department may specify alternate means for returning to compliance with the MCLs for nitrate, nitrite, or combined nitrate and nitrite. Alternate compliance agreements shall be in writing.

(2) MONITORING AND REPORTING VIOLATIONS. Failure to monitor shall result in a monitoring and reporting violation.

(3) USE OF ANALYTICAL RESULTS. The department may determine compliance or initiate enforcement action based upon analytical results and other information compiled by their sanctioned representatives and agencies.

NR 809.118 Sodium monitoring, reporting and notification requirements. (1) GENERAL. The supplier of water for a community water system shall collect and analyze one sample per plant at the entry point to the distribution system for the determination of sodium concentration. Samples will be collected and analyzed annually for systems utilizing surface water sources in whole or in part, and at least every 3 years for systems utilizing solely groundwater sources. The minimum number of samples required to be taken by the system shall be based on the number of plants used by the system, except that multiple wells drawing raw water from a single aquifer may, with department approval, be considered one plant for determining the minimum number of samples. The supplier of water may be required by the department to collect and analyze water samples for sodium more frequently in locations where the sodium content is variable.

(2) DEPARTMENT NOTIFICATION. The supplier of water shall report to the department the results of the analyses for sodium concentration within the first 10 days of the month following the month in which the sample results were received or within the first 10 days following the end of the required monitoring period as stipulated by the department, whichever is first. If more than annual sampling is required, the supplier shall report the average sodium concentration within 10 days of the month following the month in which the analytical results of the last sample used for the annual average was received.

(3) HEALTH OFFICIALS NOTIFICATION. The supplier of water shall notify appropriate local health officials of the sodium concentration by written notice by direct mail within 3

months of receipt of sample results. A copy of each notice required to be provided by this subsection and a list of health officials notified shall be sent to the department within 10 days of its issuance.

(4) ANALYTICAL METHODS. Analyses for sodium shall be performed as prescribed in s. NR 809.113(1), Table A.

Note: A primary maximum contaminant level has not been established for sodium.

NR 809.119 Materials identification for corrosivity characteristics. Suppliers of water for community water supply systems shall identify whether the following construction materials are present in their distribution system and report their findings to the department:

(a) Lead from piping, solder, caulking, interior lining of distribution mains, alloys and home plumbing.

(b) Copper from piping and alloys, service lines and home plumbing.

(c) Galvanized piping, service lines and home plumbing.

(d) Ferrous piping materials such as cast iron and steel.

(e) Asbestos cement pipe.

(f) Vinyl lined asbestos cement pipe.

(g) Coal tar lined pipes and tanks.

NR 809.20 Synthetic organic contaminant maximum contaminant levels and BATS.

(1) APPLICABILITY. The following maximum contaminant levels for synthetic organic contaminants apply to community water systems and non-transient non-community water systems.

Contaminant	MCL (mg/L)
Alachlor	0.002
Atrazine	0.003
Benzo[a]pyrene	0.0002
Carbofuran	0.04
Chlordane	0.002
2,4-D	0.07
Dalapon	0.2
Dibromochloropropane	0.0002
Di(2-ethylhexyl)adipate	0.4
Di(2-ethylhexyl)phthalate	0.006
Dinoseb	0.007
Diquat	0.02
Endothall	0.1
Endrin	0.002

Ethylene Dibromide	0.00005
Glyphosate	0.7
Heptachlor	0.0004
Heptachlor epoxide	0.0002
Hexachlorobenzene	0.001
Hexachlorocyclopentadiene	0.05
Lindane	0.0002
Methoxychlor	0.04
Oxamyl	0.2
Pentachlorophenol	0.001
Picloram	0.5
Polychlorinated biphenyls (PCBs)	0.0005
Simazine	0.004
2,3,7,8-TCDD (Dioxin)	$3x10^{-8}$
Toxaphene	0.003
2,4,5-TP	0.05

(2) BEST AVAILABLE TREATMENT. The following are the BATs available for achieving compliance with the maximum contaminant levels for the organic contaminants listed in sub. (1):

(a) Central treatment using granular activated carbon, except for glyphosate.

(b) Packed tower aeration for dibromochloropropane, di(2-ethylhexyl)adipate, ethylene dibromide, and hexachlorocyclopentadiene.

(c) Oxidation for glyphosate.

(3) ALTERNATIVE TREATMENT. A public water system owner or operator may use an alternative treatment not listed in sub. (2) if it is demonstrated to the department, using pilot studies or other means, that the alternative treatment is sufficient to achieve compliance with the MCLs in sub. (1).

NR 809.203 Analytical requirements for synthetic organic contaminants.

(1) DETECTION LIMITS. Detection as used in this section shall be defined as greater than or equal to the following concentrations for each contaminant:

Contaminant	Detection Limit (mg/L)
1. Alachlor	0.0002
2. Atrazine	0.0001
3. Benzo[a]pyrene	0.00002
4. Carbofuran	0.0009
5. Chlordane	0.0002

6. 2,4-D	0.0001
7. Dalapon	0.001
8. Dibromochloropropane	0.00002
9. Di(2-ethylhexyl)adipate	0.006
10.Di(2-ethylhexyl)phthalate	0.006
11. Dinoseb	0.0002
12. Diquat	0.0004
13. Endothall	0.009
14. Endrin	0.00001
15. Ethylene dibromide	0.00001
16. Glyphosate	0.006
17. Heptachlor	0.00004
18. Heptachlor epoxide	0.00002
19. Hexachlorobenzene	0.0001
20.Hexachlorocyclopentadiene	0.0001
21. Lindane	0.00002
22. Methoxychlor	0.0001
23. Oxamyl	0.002
24. Picloram	0.0001
25.Polychlorinated biphenyls (PCBs as decachlorobiphenyls)	0.0001
26. Pentachlorophenol	0.00004
27. Simazine	0.00007
28. Toxaphene	0.001
29. 2,3,7,8-TCDD (Dioxin)	0.000000005
30. 2,4,5-TP	0.0002

(2) ANALYTICAL METHODS. Analysis for the synthetic organic contaminants listed in s. NR 809.20 shall be conducted using the methods prescribed in Table C or methods approved by the EPA under Appendix A to Subpart C of Part 141--Alternative Testing Methods Approved for Analyses Under the Safe Drinking Water Act and published in the Federal Register.

TABLE C
SDWA Approved Methodology for Synthetic Organic Contaminants

Contaminant	EPA Methods	SM	ASTM	Other
Regulated Parameters:				
Synthetic Organic Chemicals				
2,3,7,8-TCDD (dioxin)		1613[1]		
2,4-D [2] (as acids, salts and esters)	515.2, 555, 515.1, 515.3, 515.4		D5317-93, 98 (Reapproved 2003)	
2,4,5-TP [2] (Silvex)	515.2, 555, 515.1, 515.3, 515.4		D5317-93, 98 (Reapproved 2003)	
Alachlor	507, 525.2, 508.1, 505[8], 551.1			
Atrazine [3]	507, 525.2, 508.1, 505[8], 551.1			Syngenta[4] AG-625
Benzo(a)pyrene	525.2, 550, 550.1			
Carbofuran	531.1	6610[5]		
Chlordane	508, 525.2, 508.1, 505			
Dalapon	552.1 515.1, 552.2, 515.3, 515.4, 552.3			
Di(2-ethylhexyl)adipate	506, 525.2			
Di(2-ethylhexyl)phthalate	506, 525.2			
Dibromochloropropane (DBCP)	504.1, 551.1			
Dinoseb	515.2, 555, 515.1, 515.3			
Diquat	549.2			
Endothall	548.1			
Endrin	508, 525.2, 508.1, 505, 551.1			
Ethylene dibromide (EDB)	504.1, 551.1			
Glyphosate	547	6651[6]		
Heptachlor	508, 525.2, 508.1, 505, 551.1			
Heptachlor Epoxide	508, 525.2, 508.1,			

	505, 551.1			
Hexachlorobenzene	508, 525.2, 508.1, 505, 551.1			
Hexachlorocyclopentadiene	508, 525.2, 508.1, 505, 551.1			
Lindane	508, 525.2, 508.1, 505, 551.1			
Methoxychlor	508, 525.2, 508.1, 505, 551.1			
Oxamyl	531.1	6610[5]		
PCBs (as decachlorobiphenyl)	508A[7]			
(as Aroclors)	508.1, 508, 525.2, 505			
Pentachlorophenol	515.2, 525.2, 555, 515.1, 515.3, 515.4		D5317-93, 98 (Reapproved 2003)	
Picloram [4]	515.2, 555, 515.1, 515.3, 515.4		D5317-93, 98 s(Reapproved 2003)	
Simazine	507, 525.2, 508.1, 505[8], 551.1			
Toxaphene	508, 508.1, 525.2, 505			
Total Trihalomethanes	502.2, 524.2, 551.1			
Unregulated Parameters:				
Aldicarb	531.1	6610[5]		
Aldicarb sulfone	531.1	6610[5]		
Aldicarb Sulfoxide	531.1	6610[5]		
Aldrin	505, 508, 525.2, 508.1			
Butachlor	507, 525.2			
Carbaryl	531.1	6610[5]		
Dicamba	515.1, 555, 515.2			
Dieldrin	505, 508, 525.2, 508.1			
3-Hydroxcarbofuran	531.1	6610[5]		
Methomyl	531.1	6610[5]		

Metolachlor	507, 525.2, 508.1			
Metribuzin	507, 525.2, 508.1			
Propachlor	507, 525.2, 508.1			

[1] Method 1613, "Tetra− through Octa− Chlorinated Dioxins and Furans by Isotope Dilution. HRGC/HRMS, EPA−821/B−94/005, October 1994, Method 1613 can be used to measure 2, 3, 7, 8−TCDD (dioxin). This method is available from National Technical Information Service, NTIS PB95−104774.

[2] Accurate determination of the chlorinated esters requires hydrolysis of the sample as described in EPA Methods 515.1, 515.2, 515.3, 515.4 and 555 and ASTM Method D 5317-93, 98 (Reapproved 2003).

[3] Substitution of the detector specified in Method 505, 507, 508, or 508.1 for the purpose of achieving lower detection limits is allowed as follows: Either an electron capture or nitrogen phosphorus detector may be used provided all regulatory requirements and quality control criteria are met.

[4] This method may not be used for the analysis of atrazine in any system where chlorine dioxide is used for drinking water treatment. In samples from all other systems, any result generated by Method AG-625 that is greater than one-half the maximum contaminant level (MCL) (in other words, greater than 0.0015 mg/L or 1.5 µg/L) must be confirmed using another approved method for this contaminant and should use additional volume of the original sample collected for compliance monitoring. In instances where a result from Method AG-625 triggers such confirmatory testing, the confirmatory result is to be used to determine compliance.

[5] Method 6610 shall be followed in accordance with the "Supplement to the 18th edition of Standard Methods for the Examination of Water and Wastewater", 1994, or with the 19th edition of Standard Methods for the Examination of Water and Wastewater, 1995, APHA; either publication may be used. This incorporation by reference was approved by the Director of the Federal Register in accordance with 5 U.S.C. 552 (a) and 1 CFR Part 51. Copies may be obtained from the American Public Health Association, 1015 Fifteenth Street, N.W., Washington, D.C., 2005. Other required analytical test procedures germane to conducting these analyses are contained in Technical Notes on Drinking Water Methods, EPA/600/R-94-173, October 1994, NTIS PB95-104766.

[6] Method 6651 shall be followed in accordance with the "Standard Methods for the Examination of Water and Wastewater", 18th Edition, 1992, and 19th edition, 1995, American Public Health Association. This incorporation by reference was approved by the Director of the Federal Register in accordance with 5 U.S.C. 552 (a) and 1 CFR Part 51. Copies may be obtained from the American Public Health Association, 1015 Fifteenth Street, N.W., Washington, D.C., 20005.

[7] Method 505 or 508 can be used as a screen for PCBs. Method 508A shall be used to quantitate PCBs as decachlorobiphenyl if detected in Method 505 or 508. PCBs are qualitatively identified as Aroclors and measured for compliance purposes as decachlorobiphenyl

[8] A nitrogen−phosphorus detector should be substituted for the electron capture detector in Method 505 (or a different approved method should be used) to determine alachlor, atrazine and simizine, if lower detection limits are required.

(3) PCB ANALYSIS. Analysis for PCBs shall be conducted as follows:

(a) Each system which monitors for PCBs shall have each sample analyzed by a laboratory certified under ch. NR 149 using Method 505, 508, 508.1 or 525.2 as specified in Table C and must achieve the required detection limits in this subsection.

(b) If one or more of 7 PCB Aroclors are detected as designated in this paragraph in any sample analyzed using Methods 505 and 508, the sample shall be reanalyzed using Method 508A to quantitate PCBs as decachlorobiphenyl.

Aroclor	**Detection limit (mg/L)**
1016	0.00008
1221	0.02
1232	0.0005
1242	0.0003
1248	0.0001
1254	0.0001
1260	0.0002

(c) Compliance with the PCB MCL shall be determined based upon the quantitative results of analyses using Method 508A.

(4) SAMPLE COLLECTION. Samples shall be collected using containers, preservatives and holding times specified in Table D:

TABLE D
Sample Preservation Requirements and Holding Times for Organic Parameters

Parameter/Method	**Preservation**	**Container**	**Holding Time**	
			Sample	**Extract**
502.1,502.2,503.1	Sodium Thiosulfate (3 mg) or Ascorbic Acid (25 mg), Cool, 4°C, HCl pH<2	40 mL, G[1]	14 days	-
504	Sodium Thiosulfate (3 mg), Cool, 4°C, HCl pH<2	40 mL, G[1]	28 days	Analyze immediately
505	Sodium Thiosulfate (3 mg), Cool, 4°C	40 mL, G[1]	14 days (Heptachlor=7	Analyze immediately

			days)	
506	Sodium Thiosulfate (60 mg), Cool, 4°C, dark	1L, Amber G[2]	14 days	4°C, dark, 14 days
507	Sodium Thiosulfate (80 mg), Cool, 4°C	1L, Amber G[2]	14 days (see method for exceptions)	4°C, dark, 14 days
508	Sodium Thiosulfate (80 mg), Cool, 4°C	1L, G[2]	7 days (see method for exceptions)	4°C, dark 14 days
508A	Cool, 4°C	1L, G[2]	14 days	30 days
515.1	Sodium Thiosulfate (80 mg), Cool, 4°C	1L, Amber G[2]	14 days	4°C, dark, 28 days
524.1, 524.2	Ascorbic Acid (25 mg), HCl pH<2,Cool, 4°C,	40 mL, G[1]	14 days	-
525.1	Sodium Sulfite (40-50 mg) or Sodium Arsenite (40-50 mg) Cool, 4°C, HCl pH<2	1L, G[1]	7 days	30 days
531.1	Monochloroacetic acid pH<3, Sodium Thiosulfate (80 mg), Cool, 4°C	60 mL, G[1]	Freeze -10°C, 28 days	-
547	Sodium Thiosulfate (100 mg/L), Cool, 4°C	60 mL, G[1]	14 days (18 mo. frozen)	-
548	Cool, 4°C	60 mL, G[1]	7 days	1 day
549	Sodium Thiosulfate (100 mg/L), H2SO4 pH<2, Cool, 4°C, dark	1L, High Density Amber PVC or Silanized Amber Glass	7 days	21 days
550, 550.1	Sodium Thiosulfate (100 mg/L), Cool, 4°C, HCl pH<2	1L, Amber G[2]	7 days	4°C, dark, 40 days
551.1	Ammonium chloride Sodium sulfite (100 mg/L), Cool, 4°C, HC1 pH< 4.5-5.0	60 mL[2]	4°C, 14 days	-10°C, 14 days
552.2	Ammonium chloride (10 mg/L), Cool 4°C	100 mL, Amber G[2]	14 days 4°C	7 days 4°C, 14 days -10°C
1613	Sodium Thiosulfate (80 mg), Cool, 4°C, dark	1L, Amber G[2]	-	40 days

[1] Teflon-lined septa.
[2] Teflon-lined cap.

(5) LABORATORY CERTIFICATION. Analyses under this section shall only be conducted by laboratories that have received certification under ch. NR 149 or have been approved by EPA.

NR 809.205 Monitoring requirements for synthetic organic contaminants. (1) GENERAL. Owners or operators of community and non-transient non-community water systems shall monitor for the synthetic organic contaminants listed in s. NR 809.20 for the purposes of determining compliance with the maximum contaminant levels as follows:

(a) Groundwater sources shall be sampled under normal operating conditions at every entry point to the distribution system which is representative of each well after treatment, herein called the sampling point. Each sample shall be taken at the same sampling point unless, if approved by the department, conditions make another sampling location more representative of each source or treatment plant.

(b) Surface water sources or combined surface water and groundwater sources shall be sampled at each entry point to the distribution system after treatment, or at points in the distribution system that are representative of each source after treatment, herein called the sampling point. Each sample shall be taken at the same sampling point unless, if approved by the department, conditions make another sampling location more representative of each source or treatment plant.

(c) If the system draws water from more than one source and the sources are combined before distribution, the system shall be sampled at an entry point to the distribution system during periods of normal operating conditions when water representative of all sources is being used.

(d) All new systems or systems that use a new source of water that begin operation after January 22, 2004 shall demonstrate compliance with the MCLs specified in s. NR 809.20 in accordance with the requirements in this section. The system shall also comply with the initial sampling frequencies specified by the department to ensure a system can demonstrate compliance with the MCLs. Routine and increased monitoring frequencies shall be conducted in accordance with the requirements of this section.

(2) MONITORING FREQUENCY FOR SYNTHETIC ORGANIC CONTAMINANTS. The frequency of monitoring to determine compliance with the maximum contaminant level for synthetic organic contaminants specified in s. NR 809.20 shall be conducted as follows:

(a) *Initial monitoring*. New systems or systems with new sources shall demonstrate compliance with the MCLs listed under s. NR 809.20 for synthetic organic contaminants prior to initiating water service. Each community and non-transient, non-community water system shall take 4 consecutive quarterly samples for each contaminant listed in s. NR 809.20 beginning with the year the system initiate water service and every compliance period after that unless they meet the requirements of par (b). After demonstrating compliance with the MCLs and beginning with the initial compliance period, new groundwater systems or groundwater systems with new sources may receive a complete waiver from the department for the following contaminants dioxin, PCBs, and benzo(a)pyrene.

(b) *Routine monitoring*. Sampling may be reduced to routine monitoring after the initial monitoring period as follows:

1. *Systems greater than 3,330*. Systems serving more than 3,300 persons which do not detect a contaminant in the initial compliance period may reduce the sampling frequency to a minimum of 2 quarterly samples in one year during each repeat compliance period.

2. *Systems less than 3,300.* Systems serving 3,300 persons or less which do not detect a contaminant in the initial compliance period may reduce the sampling frequency to a minimum of one sample during each repeat compliance period.

(3) WAIVER REQUEST. Each community and non-transient non-community groundwater system may apply to the department for a waiver from the requirements of sub. (2)(b). A system shall reapply for a waiver for each compliance period.

(4) WAIVER EVALUATION. The department may grant a waiver from the requirements of sub. (2) after evaluating the following factors:

(a) Knowledge of previous use including transport, storage or disposal of the contaminant within the watershed or zone of influence of the system. If a determination by the department reveals no previous use of the contaminant within the zone of influence of the well, a waiver may be granted.

(b) If previous use of the contaminant is unknown or it has been used previously, then the following factors shall be used to determine whether a waiver is granted:

1. Previous analytical results.

2. The proximity of the system to a potential point or non-point source of contamination. Point sources include spills and leaks of chemicals at or near a water treatment facility or at manufacturing, distribution, or storage facilities, or from hazardous and municipal waste landfills and other waste handling or treatment facilities. Non-point sources include the use of pesticides to control insect and weed pests on agricultural areas, forest lands, home and gardens, and other land application uses.

3. The environmental persistence and transport of the pesticide or PCBs.

4. How well the water source is protected against contamination due to such factors as depth of the well and the type of soil and the integrity of the well casing.

5. Elevated nitrate levels at the water supply source.

6. Use of PCBs in equipment used in the production, storage or distribution of water such as pumps, transformers, etc.

(5) WAIVER CONDITIONS AND VULNERABILITY ASSESSMENTS. As a condition of the waiver under sub (4), a groundwater system shall update its vulnerability assessment considering the factors listed in sub. (4). Based on this vulnerability assessment, the department shall reconfirm that the system is non-vulnerable. If the department does not make this reconfirmation within 3 years of the initial determination or each subsequent determination, then the waiver is invalidated and the system is required to sample during each compliance period as specified in sub. (2)(b).

(6) MONITORING FOR DETECTED CONTAMINANTS. If a synthetic organic contaminant listed in s. NR 809.20 is detected, as defined by s. NR 809.203(1) in any sample, then the system owner or operator shall monitor quarterly at each entry point which resulted in detection. Quarterly monitoring may be modified by the department as follows:

(a) The department may decrease the quarterly monitoring requirement specified in par. (a) provided it has determined that the system is reliably and consistently below the MCL. In no case may the department make this determination unless a groundwater

system takes a minimum of 2 quarterly samples and a surface water system takes a minimum of 4 quarterly samples.

(b) After the department determines the system is reliably and consistently below the MCL, the department may allow the system to monitor annually. Systems which monitor annually shall monitor during the quarter that previously yielded the highest analytical results.

(c) Systems which have 3 consecutive annual samples with no detection of a contaminant may apply to the department for reduced monitoring under sub. (2)(a) or (b) or a waiver as specified in sub. (3).

(d) If monitoring results in detection of one or more of certain related contaminants such as heptachlor and heptachlor epoxide, then subsequent monitoring shall analyze for all related contaminants.

(7) MONITORING WHEN AN MCL IS EXCEEDED. Additional monitoring for synthetic organic contaminants shall be required as follows in order to maintain compliance:

(a) If an organic contaminant listed in s. NR 809.20 is detected at a level exceeding the MCL in any sample, then the system owner or operator shall begin to take quarterly samples at each entry point which exceeded an MCL.

(b) Systems which exceed an MCL listed in s. NR 809.20 as determined by s. NR 809.207(1) shall monitor quarterly. After a minimum of 4 quarterly samples show that the system is back in compliance and the department determines the system is reliably and consistently below the MCL as specified in s. NR 809.207(1), the system shall monitor at the frequency specified in sub. (6)(b).

(8) CONFIRMATION SAMPLES. The department may require a confirmation sample for positive or negative results. If a confirmation sample is required by the department, the result shall be averaged with the first sampling result and the average used for the compliance determination as specified by s. NR 809.207(1). The department may delete results of obvious sampling errors from this calculation, or may require additional samples to determine whether the result is or is not in error.

(9) COMPOSITE SAMPLING. The department may reduce the total number of samples a system is required to analyze by allowing the use of compositing. If the department allows compositing, the following composite sampling requirements shall be met:

(a) Composite samples from a maximum of 5 entry points are allowed, if the detection limit of the method used for analysis is less than one-fifth of the MCL. Compositing is only permitted at entry points within a single system. Compositing of samples shall be done in the laboratory and analyzed within 14 days of sample collection.

(b) If the concentration in the composite sample detects one or more contaminants listed in s. NR 809.20, then a follow-up sample shall be taken and analyzed for each contaminant detected within 14 days from each entry point included in the composite.

(c) If duplicate aliquots of the original sample taken from each entry point used in the composite are available, the system may use these duplicates instead of re-sampling. The duplicate shall be analyzed and the results reported to the department within 14 days of collection.

(10) INCREASING MONITORING FREQUENCY. The department may increase the required monitoring frequency, if necessary, to detect variations within the system. Examples of variations include fluctuations in concentration due to seasonal use or changes in the water source.

(11) DESIGNATION OF SAMPLING TIMES. Each public water system shall monitor during the month, quarter or year designated by the department within each compliance period.

NR 809.207 Compliance requirements for synthetic organic contaminants.

(1) MCL COMPLIANCE DETERMINATION. Compliance with synthetic organic contaminant MCLs shall be determined as follows:

(a) Compliance with the synthetic organic contaminant MCLs specified in s. NR 809.20 shall be determined based on the analytical results obtained at each entry point. If one entry point is in violation of an MCL, the system is in violation of the MCL.

(b) For systems which are conducting monitoring more frequently than annual, compliance is determined by a running annual average of all samples taken at each entry point. If the annual average of any entry point is greater than the MCL, then the system is out of compliance. If the initial sample or a subsequent sample would cause the annual average to be exceeded, then the system is out of compliance immediately.

(c) If monitoring is conducted annually or less frequently, the system is out of compliance if the level of a contaminant at any entry point is greater than the MCL. Compliance shall be based on the average value of the initial sample and the confirmation sample.

(d) Any contaminant listed in s. NR 809.20 that is detected shall be quantified. Any sample below the reported method detection limit shall be calculated at zero for the purposes of determining the averages in pars. (b) and (c).

(e) If a system fails to collect the required number of samples, compliance shall be based on the total number of samples collected.

(2) DETECTION OF SYNTHETIC CONTAMINANTS NOT LISTED IN S. NR 809.20(1). Any detection of a volatile organic contaminant not listed in s. NR 809.20(1) shall be reported to the department with the other monitoring reports required under this section. The laboratory shall indicate whether any detected synthetic organic contaminant not listed in s. NR 809.20(1) has been confirmed or tentatively identified, and when a numerical result is reported, whether the result is quantitative or an estimate.

(3) USE OF ANALYTICAL RESULTS. The department may determine compliance or initiate enforcement action based upon analytical results and other information compiled by their sanctioned representatives and agencies.

NR 809.24 Volatile organic contaminant maximum contaminant levels and BATS.

(1) APPLICABILITY. The following maximum contaminant levels for volatile organic contaminants (VOC) apply to community water systems and non-transient, non-community water systems.

Contaminant	MCL (mg/L)
Benzene	0.005
Vinyl chloride	0.0002
Carbon tetrachloride	0.005
1,2-Dichloroethane	0.005

Trichloroethylene	0.005
1,1-Dichloroethylene	0.007
1,1,1-Trichloroethane	0.20
para-Dichlorobenzene	0.075
cis-1,2-Dichloroethylene	0.07
trans-1,2-Dichloroethylene	0.1
Dichloromethane	0.005
1,2-Dichloropropane	0.005
Ethylbenzene	0.7
Monochlorobenzene	0.1
ortho-Dichlorobenzene	0.6
Styrene	0.1
Tetrachloroethylene	0.005
Toluene	1
1,2,4-Trichlorobenzene	0.07
1,1,2-Trichloroethane	0.005
Xylenes (total)	10

(2) BEST AVAILABLE TREATMENT. The following are the BATs available for achieving compliance with the maximum contaminant level for the volatile organic chemicals listed in sub. (1):

(a) Central treatment using packed tower aeration.

(b) Central treatment using granular activated carbon, except for vinyl chloride and dichloromethane.

(3) ALTERNATIVE TREATMENT. The department may approve the use of alternative treatment not listed in sub. (2), if a public water system owner or operator demonstrates to the department, using pilot studies or other means, that the alternative treatment is sufficient to achieve compliance with the MCLs in sub. (1).

NR 809.243 Analytical requirements for volatile organic contaminants.

(1) DETECTION LIMITS. For the purposes of this section, detection is defined as >0.0005 mg/l, except for vinyl chloride for which detection is defined as >0.0003 mg/L.

(2) ANALYTICAL METHODS. Analysis for the volatile organic contaminants listed in s. NR 809.24 shall be conducted using the methods prescribed in Table E or methods approved by the EPA under Appendix A to Subpart C of Part 141--Alternative Testing Methods Approved for Analyses Under the Safe Drinking Water Act and published in the Federal Register.

TABLE E
SDWA Approved Methodology for Volatile Organic Contaminants

Contaminant	**EPA Methods** [1]
Regulated Parameters:	
Benzene	502.2, 524.2
Carbon tetrachloride	502.2, 524.2, 551.1
Chlorobenzene	502.2, 524.2
Dibromochloropropane (DBCP)	504.1, 551.1
1,2-Dichlorobenzene	502.2, 524.2
1,4-Dichlorobenzene	502.2, 524.2
1,2-Dichloroethane	502.2, 524.2
cis-Dichloroethylene	502.2, 524.2
trans-Dichloroethylene	502.2, 524.2
Dichloromethane	502.2, 524.2
1,2-Dichloropropane	502.2, 524.2
Ethylbenzene	502.2, 524.2
Styrene	502.2, 524.2
Tetrachloroethylene	502.2, 524.2, 551.1
1,1,1-Trichloroethane	502.2, 524.2, 551.1
Trichloroethylene	502.2, 524.2, 551.1
Toluene	502.2, 524.2
1,2,4-Trichlorobenzene	502.2, 524.2
1,1-Dichloroethylene	502.2, 524.2
1,1,2-Trichloroethane	502.2, 524.2, 551.1
Vinyl chloride	502.2, 524.2
Xylenes (total)	502.2, 524.2

[1] Procedures for Methods 502.2, 504.1, 505, 506, 507, 508, 508.1, 515.2, 524.2 525.2, 531.1, 551.1 and 552.2 are in Methods for the Determination of Organic Compounds in Drinking Water Supplement III, EPA/600/R-95-131, August 1995. Methods 508A and 515.1 are in "Methods for the Determination of Organic Compounds in Drinking Water", EPA−600/4−88/039, December 1988, Revised, July 1991. Methods 547, 550, and 550.1 are in "Methods for the Determination of Organic Compounds in Drinking Water, Supplement I", EPA−600/4−90/020, July 1990. Methods 548.1, 549.1and 555 are in "Methods for the Determination of Organic Compounds in Drinking Water, Supplement II", EPA−600/R−92−129, August 1992. These documents are available from the National Technical Information Service (NTIS), U.S. Department of Commerce, 5285 Port Royal Road, Springfield, Virginia 22161 as publications NTIS PB91−231480, PB91−146027, and PB92−207703. The toll free number is 1-800-553-6847. EPA Methods 515.3 and 549.2 are available from U.S. Environmental Protection Agency, National Exposure Research Laboratory (NERL)-Cincinnati, 26 West Martin Luther King Drive, Cincinnati, OH 45268. ASTM Method D 5317-93 is available in the Annual Book of ASTM Standards, 1996, Vol. 11.02, American Society for Testing and Materials, 100 Barr Harbor Drive, West Conshohocken, PA 19428, or in any edition published after 1993.

(3) SAMPLE COLLECTION. Samples shall be collected using containers, preservatives and holding times specified in s. NR 809.203(4) Table D.

(4) LABORATORY CERTIFICATION. Analyses under this section shall only be conducted by laboratories that have received certification under ch. NR 149 or have been approved by EPA.

(5) LABORATORY EVALUATION. Each certified laboratory shall determine the method detection limit (MDL) at which it is capable of detecting VOCs as defined in federal law under 40 CFR, Part 136, Appendix B. The maximum acceptable MDL is 0.0005 mg/L for all VOCs except vinyl chloride, which is 0.0002 mg/L. These are the detection concentrations for purposes of this section.

NR 809.245 Monitoring requirements for volatile organic contaminants.

(1) GENERAL. Owners or operators of community and non-transient non-community water systems shall monitor for the contaminants listed in s. NR 809.24 for purposes of determining compliance with the maximum contaminant levels as follows:

(a) Groundwater sources shall be sampled at every entry point to the distribution system which is representative of each well after treatment herein called the sampling point. Each sample shall be taken at the same sampling point unless, if approved by the department, conditions make another sampling location more representative of each source, treatment plant, or within the distribution system.

(b) Surface water sources or combined surface water and groundwater sources shall be sampled at each entry point to the distribution system after treatment or at points , if approved by the department, in the distribution system that are more representative of each source after treatment, herein called the sampling point. Each sample shall be taken at the same sampling point unless, if approved by the department, conditions make another sampling location more representative of each source, treatment plant or within the distribution system.

(c) If the system draws water from more than one source and the sources are combined before distribution, the system shall be sampled at an entry point to the distribution system during periods of normal operating conditions when water representative of all sources is being used.

(d) All new systems or systems that use a new source of water shall demonstrate compliance with the MCLs specified in s. NR 809.24 in accordance with the requirements in this section. The system shall also comply with the initial sampling frequencies specified by the department to ensure a system can demonstrate compliance with the MCLs. Routine and increased monitoring frequencies shall be conducted in accordance with the requirements in this section.

(2) MONITORING FREQUENCY FOR VOLATILE ORGANIC CONTAMINANTS. The frequency of monitoring to determine compliance with the maximum contaminant level for volatile organic contaminants specified in s. NR 809.24 shall be conducted as follows:

(a) *Initial monitoring* 1. New systems or systems with new sources shall demonstrate compliance with the MCLs listed under s. NR 809.24 for volatile organic contaminants prior to initiating water service.

2. Each community and non-transient non-community water system owner or operator shall take 4 consecutive quarterly samples for each VOC contaminant specified in s. NR 809.24, beginning with the first quarter a new source goes into service.

3. If the initial monitoring under subds. 1. and 2. for the VOC contaminants listed in s. NR 809.24, did not detect any VOC contaminant, then the system owner or operator shall take one sample annually.

(b) *Routine monitoring.* Each community and non-transient non-community water system owner or operator shall take annual samples for VOC contaminants.

(c) R*educed monitoring*. 1. After a minimum of 3 years of annual sampling, under par. (a) 3. or (b) the department may allow groundwater systems with no previous detection of any VOC contaminant specified in s. NR 809.24 to take one sample during each three year compliance period.

2. After a minimum of 3 years of annual sampling, under par. (a) 3. or (b) the department may allow surface water systems with no previous detection of any VOC contaminant specified in s. NR 809.24 to take one sample during each three year compliance period, if the surface water system meets criteria specified by the department.

(3) WAIVER REQUESTS. Each community and non-transient groundwater system which does not detect a VOC contaminant specified in s. NR 809.24 may apply to the department for a waiver from the requirements of sub. (2)(c) after completing all of the initial monitoring under sub. (2)(a). For the purposes of this section, detection is defined as >0.0005 mg/l, except for vinyl chloride for which detection is defined as 0.0002 mg/L. A groundwater system shall reapply for a waiver for each compliance period. A waiver shall be effective for no more than 6 years or 2 compliance periods.

(4) WAIVER EVALUATION. The department may grant a waiver from sub. (2)(c) after evaluating the following factors:

(a) Knowledge of previous use including transport, storage or disposal of the contaminant within the watershed or zone of influence of the system. If a determination by the department reveals no previous use of the contaminant within zone of influence for the well, a waiver may be granted.

(b) If previous use of the contaminant is unknown or it has been used previously, then the following factors shall be used to determine whether a waiver is granted.

1. Previous analytical results.

2. The proximity of the system to potential point or non-point source of contamination. Point sources include spills and leaks of chemicals at or near a water treatment facility or at manufacturing, distribution or storage facilities, or from hazardous and municipal waste landfills and other waste handling or treatment facilities.

3. The environmental persistence and transport of the contaminants.

4. The number of persons served by the public water system and the proximity of a smaller system to a larger system.

5. How well the water source is protected against contamination. Groundwater systems shall consider factors such as depth of the well, the type of soil and wellhead protection.

(5) WAIVER CONDITIONS AND VULNERABILITY ASSESSMENTS. A groundwater system shall take one sample at each entry point during the time the waiver is effective. As a condition of the waiver under sub (4), a groundwater system shall update its vulnerability

assessment considering the factors listed in sub. (4). Based on this vulnerability assessment, the department shall reconfirm that the system is non-vulnerable. If the department does not make this reconfirmation within 3 years of the initial determination or each subsequent determination, then the waiver is invalidated and the system is required to sample during each compliance period as specified in sub. (2)(b).

(6) MONITORING FOR DETECTED COMPOUNDS. If vinyl chloride is detected at a level exceeding 0.0002 mg/L, or any other VOC contaminant specified in s. NR 809.24 is detected at a level exceeding 0.0005 mg/1 in any sample, then:

(a) The system shall monitor quarterly for all VOCs under s. NR 809.24 at each sampling point which resulted in a detection.

(b) The department may decrease the quarterly monitoring requirement specified in par. (a) if the department has determined that the system is reliably and consistently below the MCL. In no case may the department make this determination unless a groundwater system takes a minimum of 2 quarterly samples and a surface water system takes a minimum of 4 quarterly samples.

(c) If the department determines that the system is reliably and consistently below the MCL, the department may allow the system to monitor annually. Systems which monitor annually shall monitor during the quarter which previously yielded the highest analytical result.

(d) Systems which have 3 consecutive annual samples with no detection of a contaminant may apply to the department for a waiver as specified in sub. (3).

(7) MONITORING WHEN AN MCL IS EXCEEDED. Additional monitoring for volatile organic contaminants shall be required as follows in order to maintain compliance.

(a) If a VOC contaminant specified in s. NR 809.24 is detected at a level exceeding the MCL in any sample, then the system owner or operator shall begin to take quarterly samples at each entry point which exceeded a MCL.

(b) Systems which exceed a MCL listed in s. NR 809.24 shall monitor quarterly. After a minimum of 4 quarterly samples show that the system is back in compliance and the department determines the system is reliably and consistently below the MCL as specified in s. NR 809.247(1), the system shall monitor at the frequency specified in sub. (6)(c).

(8) CONFIRMATION SAMPLES. The department may require a confirmation sample for positive or negative results. The department may delete results of sampling errors from any compliance calculation, or may require the collection of additional samples to determine whether the result is or is not in error. When a confirmation sample is required, the result shall be averaged with the first sampling result and the average used for the compliance determination as specified in s. NR 809.247(1)(c)

(9) COMPOSITE SAMPLES. The department may reduce the total number of samples a system shall analyze by allowing the use of compositing. The following composite sampling requirements shall be met:

(a) Compositing may only be permitted for entry points within a single system. Composite samples from a maximum of 5 entry points may be allowed, if the detection limit of the method used for analysis is less than one-fifth of the MCL.

(b) Compositing of samples shall be done in the laboratory and analyzed within 14 days of sample collection according to the procedures in s. NR 809.243(1) Table E.

(c) If the concentration in the composite sample is greater than 0.0003 mg/L for vinyl chloride or 0.0005mg/L for any other contaminant listed under s. NR 809.24, then a follow-up sample shall be taken and analyzed for each contaminant detected within 14 days from each entry point included in the composite.

(d) If duplicates of the original sample taken from each sampling point used in the composite are available, the system may use these instead of re-sampling. The duplicate shall be analyzed and the results reported to the department within 14 days of collection.

(10) INCREASING MONITORING FREQUENCY. The department may increase monitoring requirements if necessary to detect contaminant variations within a system.

(11) DESIGNATION OF SAMPLING TIMES. Each public water system shall monitor during the month, quarter or year designated by the department within each compliance period.

NR 809.247 Compliance requirements for volatile organic contaminants. (1) MCL COMPLIANCE DETERMINATION. Compliance with volatile organic contaminant MCLs shall be determined as follows:

(a) Compliance with the VOC MCLs specified in s. NR 809.24 shall be determined based on the analytical results obtained at each entry point. If one entry point is in violation of an MCL, the system is in violation of the MCL.

(b) For systems which are conducting monitoring more frequently than annually, compliance is determined by a running annual average of all samples taken at each entry point. If the annual average of any entry point is greater than the MCL, the system is out of compliance. If the initial sample or a subsequent sample would cause the annual average to exceed the MCL, the system is out of compliance immediately.

(c) If monitoring is conducted annually, or less frequently, the system is out of compliance if the level of a contaminant at any entry point is greater than the MCL. Compliance shall be based on the average value of this sample and the confirmation sample.

(d) If a system fails to collect the required number of samples, compliance shall be based on the total number of samples collected.

(e) Any contaminant listed in s. NR 809.24 that is detected shall be quantified. Any sample below the reported method detection limit shall be calculated at zero for the purposes of determining the averages in pars. (b) and (c).

(2) DETECTION OF VOLATILE CONTAMINANTS NOT LISTED IN S. NR 809.24. Any detection of a volatile organic contaminant not listed in s. NR 809.24 shall be reported to the department with the other monitoring reports required under this section. The laboratory shall indicate whether any detected volatile organic contaminant not listed in s. NR 809.24 has been confirmed or tentatively identified, and when a numerical result is reported, whether the result is quantitative or an estimate.

(3) SEPARATE DISTRIBUTION SYSTEM NOTICE. If a public water system has a distribution system separable from other parts of the distribution system with no interconnections, the department may allow the system to give public notice to only that area served by that portion of the system which is out of compliance.

(4) USE OF ANALYTICAL RESULTS. The department may determine compliance or initiate enforcement action based upon analytical results and other information compiled by their sanctioned representatives and agencies.

NR 809.25 Special monitoring and reporting for selected organic contaminants and sulfate. (1) GENERAL. (a) Community systems with populations of 10,000 and greater shall monitor for the contaminants listed in par. (e) and (f) on a schedule to be determined by the department. Community water systems with populations less than 10,000 and non-transient, non-community water systems shall monitor for the contaminants listed in par. (e) and (f) at the discretion of the department.

(b) Surface water systems shall be sampled at the entry points to the distribution system after any application of treatment. The minimum number of samples is one year of quarterly samples per water source.

(c) Groundwater systems shall be sampled at points of entry to the distribution system representative of each well after any application of treatment. The minimum number of samples is one sample per entry point to the distribution system.

(d) The department may require confirmation and follow-up samples for positive or negative results.

(e) List of unregulated volatile organic compounds:

Chloroform
Bromoform
Chlorodibromomethane
Bromodichloromethane
Bromobenzene
Bromomethane
Chloromethane
Chloroethane
o-Chlorotoluene
p-Chlorotoluene
Dibromomethane
m-Dichlorobenzene
1,1-Dichloropropene
1,1-Dichloroethane
1,3-Dichloropropane
2,2-Dichloropropane
1,3-Dichloropropene
1,1,1,2-Tetrachloroethane
1,1,2,2-Tetrachloroethane
1,2,3-Trichloropropane
1,2,4-Trimethylbenzene
1,2,3-Trichlorobenzene
n-Propylbenzene
n-Butylbenzene
Naphthalene
Hexachlorobutadiene
1,3,5-Trimethylbenzene
p-Isopropyltoluene
Isopropylbenzene
Tert-butylbenzene

Sec-butylbenzene
Fluorotrichloromethane
Dichlorodifluoromethane
Bromochloromethane
Methyl-t-butyl ether (MTBE)
(f) List of unregulated synthetic organic contaminants:
Aldrin
Aldicarb
Aldicarb Sulfoxide
Aldicarb Sulfone
Butachlor
Carbaryl
Dicamba
Dieldrin
3-Hydroxycarbofuran
Methomyl
Metolachlor
Metribuzin
Propachlor
(g) Analysis under this section shall be conducted by a laboratory certified under ch. NR 149 using EPA methods 502.2, 524.2 for contaminants listed in par (e) and EPA methods listed in s. NR 809.203, Table C for contaminants listed in par. (f).

(2) SULFATE MONITORING. Monitoring for sulfate shall be conducted as required by the department.

(3) REPORTING REQUIREMENTS. Reporting requirements under this section shall be as required under s. NR 809.80.

(4) TREATMENT TECHNIQUES FOR ACRYLAMIDE AND EPICHLOROHYDRIN. In lieu of MCLs and monitoring for acrylamide and epichlorohydrin, the following treatment techniques and reporting are required. Each public water system shall certify annually in writing to the department using third party or manufacturer's certification, that when acrylamide and epichlorohydrin are used in drinking water systems, the combination, or product, of dose and monomer level does not exceed the levels specified as follows:

(a) Acrylamide = 0.05% dosed at 1 ppm or equivalent.

(b) Epichlorohydrin = 0.01% dosed at 20 ppm or equivalent.

(c) Suppliers of water may rely on certification from manufacturers or third parties, as approved by the department.

NR 809.30 Distribution System microbiological contaminant maximum contaminant levels. The following are the maximum contaminant levels for coliform bacteria applicable to public water systems.

(1) MCL FOR COLIFORM BACTERIA. The maximum contaminant level (MCL) for coliform bacteria is based on the presence or absence of total coliforms in a sample.

(a) For a system which collects at least 40 samples per month, if no more than 5.0% of the samples collected during a month are total coliform-positive, the system is in compliance with the MCL for total coliforms.

(b) For a system which collects fewer than 40 samples per month, if no more than one sample, including routine and repeat samples, collected during a monitoring period is total coliform-positive, the system is in compliance with the MCL for total coliforms.

(2) MCL FOR FECAL COLIFORM OR E. COLI. Any fecal coliform-positive repeat sample or E. Coli-positive repeat sample, or any total coliform-positive repeat sample following a fecal coliform-positive or E. Coli-positive routine sample constitutes a violation of the MCL for total coliforms. For purposes of the public notification requirements in subch. VII, this is a violation that may pose an acute risk to health.

(3) DETERMINING COMPLIANCE. The water supplier for a public water system shall determine compliance with the MCL for total coliforms in subs. (1) and (2) for each monitoring period in which the system is required to monitor for total coliforms.

(4) CORRECTIVE ACTION. The supplier of water shall initiate definitive action to identify the cause of the positive bacteriological sample results and to eliminate potential health hazards which may exist in the system when monitoring pursuant to s. NR 809.301 (1) or (2) shows the presence of any coliform organisms.

(5) HETEROTROPHIC BACTERIA LIMITS. If heterotrophic bacterial plate counts on water distributed to the consumer exceed 500 organisms per milliliter, the department shall determine if the bacterial count is of public health or nuisance significance and may require appropriate action.

(6) BEST AVAILABLE TREATMENT TECHNIQUES. Any of the following are best technology, treatment techniques, or other means available for achieving compliance with the maximum contaminant level for total coliforms in subs. (1) and (2):

(a) Protection of wells from coliform contamination by appropriate placement and construction.

(b) Maintenance of a disinfectant residual throughout the distribution system.

(c) Proper maintenance of the distribution system including appropriate pipe replacement and repair procedures, main flushing programs, proper operation and maintenance of storage tanks and reservoirs, and continual maintenance of positive water pressure in all parts of the distribution system.

(d) Filtration and disinfection of surface water, or disinfection of groundwater using strong oxidants such as chlorine, chlorine dioxide or ozone.

(e) The development and implementation of a department-approved wellhead protection program.

Note: The basic purpose of a wellhead protection program is to restrict potentially polluting activities near wells and well fields and within recharge areas of aquifers supplying water to these wells. In general, activities are more restricted close to the well and less so farther away.

NR 809.31 Distribution system microbiological contaminant monitoring requirements. **(1)** ROUTINE MONITORING. (a) Suppliers of water for public water systems shall collect total coliform samples at sites which are representative of water throughout the distribution system according to a written sample siting plan. These plans are subject to department review and revision.

(b) 1. Water suppliers for community water systems shall take water samples for coliform determination at regular intervals, and in a number proportionate to the

population served by the system. Suppliers required to collect multiple samples each month shall sample at geographically representative locations and on dates evenly spaced during the month. Except as specified in subd. 2., the minimum sampling frequency shall be as set forth in the following:

Population served:	**Minimum number of samples per month**
25 to 1,000 (Not serving a municipality)	1
25 to 1,000 (Serving a municipality)	2
1,001 to 2,500	2
2,501 to 3,300	3
3,301 to 4,100	4
4,101 to 4,900	5
4,901 to 5,800	6
5,801 to 6,700	7
6,701 to 7,600	8
7,601 to 8,500	9
8,501 to 12,900	10
12,901 to 17,200	15
17,201 to 21,500	20
21,501 to 25,000	25
25,001 to 33,000	30
33,001 to 41,000	40
41,001 to 50,000	50
50,001 to 59,000	60
59,001 to 70,000	70
70,001 to 83,000	80
83,001 to 96,000	90
96,001 to 130,000	100
130,001 to 220,000	120
220,001 to 320,000	150
320,001 to 450,000	180
450,001 to 600,000	210
600,001 to 780,000	240
780,001 to 970,000	270
970,001 to 1,230,000	300

1,230,001 to 1,520,000	330
1,520,001 to 1,850,000	360
1,850,001 to 2,270,000	390
2,270,001 to 3,020,000	420
3,020,001 to 3,960,000	450
3,960,001 or more	480

2. Based on a history of no coliform bacterial contamination and on a sanitary survey by the department showing the water system to be supplied solely by a protected groundwater source and free of sanitary defects, a non-municipal community water system serving 25 to 1,000 persons may, with written permission from the department, reduce this sampling frequency, except that it shall not be reduced to less than one per calendar quarter.

(c) The supplier of water for a non-community school or a non-transient non-community water system shall sample for coliform bacteria in each calendar quarter during which the system provides water to the public, unless the department, on the basis of a sanitary survey conducted in the past 5 years, or other factors, determines that more frequent monitoring is appropriate.

(d) The monitoring frequency for total coliforms for non-community water systems, notwithstanding par. (c), is as follows:

1. A non-community water system using only groundwater and serving 1,000 persons per day or fewer shall monitor each calendar quarter that the system provides water to the public., except that the department may reduce the monitoring frequency, in writing, if a sanitary survey shows that the system is free of sanitary defects. The monitoring frequency shall not be reduced to less than once per year.

2. A non-community water system using only groundwater and serving on average more than 1,000 persons per day for any month shall monitor at the same frequency as a like-sized community water system, as specified in par. (b) 1., except that the department may reduce the monitoring frequency, in writing, for any month the average daily population served is 1,000 persons or fewer per day.

3. A non-community water system using groundwater under the direct influence of surface water as defined in s. NR 809.04(37), in total or in part, shall monitor at the same frequency as a like-sized community municipal system, as specified in par. (b) 1. The system shall begin monitoring at this frequency beginning 6 months after the department determines that the groundwater source is under the direct influence of surface water.

(e) Public water systems shall collect samples at regular time intervals throughout the month, except that a system which uses groundwater and serves 1,000 persons or fewer, may collect all required samples on a single day if the samples are taken from different sites.

(f) Special purpose samples such as those taken to determine whether disinfection practices are sufficient following pipe placement, replacement or repair, may not be used to determine compliance with the MCL for total coliforms in s. NR 809.30. Repeat samples taken pursuant to sub. (2) are not considered special purpose samples, and shall be used to determine compliance with the MCL for total coliforms in s. NR 809.30.

(g) A public water system that uses groundwater under the direct influence of surface water as defined in s. NR 809.04 (37), and does not provide filtration in compliance with s. NR 810.29, shall collect at least one sample in the distribution system near the first service connection each day one or more turbidity measurements of the source water obtained as specified in s. NR 810.38 (1) (c), exceeds 1 NTU. This sample shall be analyzed for the presence of total coliforms. The system owner or operator shall collect this coliform sample within 24 hours of the first exceedance unless the department determines that the system, for logistical reasons beyond its control, cannot have the sample analyzed within 30 hours of collection. Results from this coliform monitoring shall be included in determining compliance with the MCL for total coliforms in s. NR 809.30.

(2) REPEAT MONITORING. (a) If a routine sample is total coliform-positive, the water supplier of a public water system shall collect a set of repeat samples within 24 hours of being notified of the positive result. A system which is required to collect more than one routine sample per month shall collect no fewer than 3 repeat samples for each total coliform-positive sample found. A system which is required to collect one routine sample per month or fewer shall collect no fewer than 4 repeat samples for each total coliform-positive sample found. The department may extend the 24-hour limit on a case-by-case basis if the system has a logistical problem that is beyond its control in collecting the repeat samples within 24 hours. In the case of an extension, the department will specify how much time the water supplier has to collect repeat samples.

(b) The water supplier shall collect at least one repeat sample from the sampling tap where the original total coliform-positive sample was taken, and at least one repeat sample at a tap within 5 service connections upstream and at least one repeat sample at a tap within 5 service connections downstream of the original sampling site. If a total coliform-positive sample is at the end of the distribution system, or one service conecction away from the end of the distribution system, the department may waive the location requirement to collect at least one repeat sample upstream or downstream of the original sampling site.

(c) A groundwater system serving 1000 or fewer people may use a repeat sample, taken at the source or all of the sources serving the location of each routine positive sample, to meet the requirements of both this paragraph and s. NR 809.325(2)(d). In cases where more than one source serves the location of the routine positive sample or samples, repeat samples shall be taken from each of the sources to satisfy the requirements of this paragraph and s. NR 809.325(2)(d).

(d) The water supplier shall collect all repeat samples on the same day, except that the department may allow a system with a single service connection to collect the required set of repeat samples over a 4 day period or to collect a larger volume repeat sample in one or more sample containers of any size, as long as the total volume collected is at least 400 ml, or 300 ml for systems which collect more than one routine sample per month.

(e) If one or more repeat samples in the set is total coliform-positive, the public water supplier shall collect an additional set of repeat samples in the manner specified in pars. (a) to (d). The additional set of samples shall be collected within 24 hours after the water supplier is notified of the positive result, unless the department extends the limit as provided in par. (a). The water supplier shall repeat this process until either total coliforms are not detected in one complete set of repeat samples or the system determines that the MCL for total coliforms in s. NR 809.30 has been exceeded and the system notifies the department as specified in s. NR 809.80 (2).

(f) If a water supplier collecting fewer than 5 routine samples per month has one or more total coliform-positive samples and the department does not invalidate the samples under sub. (3), the supplier shall collect at least 5 routine samples during the next month the system provides water to the public, except that the department may waive this requirement if the conditions of subd. 1. or 2. are met. The requirement for a water supplier to collect repeat samples in pars. (a) to (e) is not waivable.

1. The department may waive the requirement to collect 5 routine samples during the next month the system provides water to the public if the department performs a site visit before the end of the next month the system provides water to the public. Although a sanitary survey need not be performed, the site visit shall be sufficiently detailed to allow the department to determine whether additional monitoring or any corrective action is needed.

2. The department may waive the requirement to collect 5 routine samples during the next month the system provides water to the public if the department has determined why the sample was total coliform positive and establishes that the water supplier has corrected the problem or will correct the problem before the end of the next month the system serves water to the public. In this case, the decision to waive the following month's additional monitoring requirement will be documented in writing, signed by a qualified department official, and made available to the public. The written documentation shall describe the specific cause of the total coliform positive sample and what action the water supplier has taken or will take to correct this problem. The requirement to collect 5 routine samples during the next month the system provides water to the public shall not be waived solely on the grounds that all repeat samples are total coliform-negative. The system owner or operator shall still collect at least one routine sample before the end of the next month it serves water to the public and use it to determine compliance with the MCL for total coliforms in s. NR 809.30, unless the department has determined that the system corrected the contamination problem before the system collected the set of repeat samples required in pars. (a) to (e) and all repeat samples were total coliform negative.

(g) After a water supplier collects a routine sample and before learning the results of the analysis of that sample, if the water supplier collects another routine sample from within 5 adjacent service connections of the initial sample, and the initial sample after analysis is found to contain total coliforms, then the system may count the subsequent sample as a repeat sample instead of as a routine sample.

(h) Results of all routine and repeat samples not invalidated by the department shall be included in determining compliance with the MCL for total coliforms in s. NR 809.30 and the minimum routine requirements of this section.

(3) INVALIDATION OF TOTAL COLIFORM SAMPLES. (a) A total coliform-positive sample invalidated under this subsection does not count towards meeting the minimum monitoring requirements of this section.

(b) The department may invalidate a total coliform-positive sample only if the conditions of subd. 1., 2. or 3. are met.

1. The certified laboratory establishes that improper sample analysis caused the total coliform-positive result.

2. The department, on the basis of the results of repeat samples collected as required by sub. (2) (a) to (e), determines that the total coliform-positive sample resulted from a domestic or other non-distribution system plumbing problem. No sample may be invalidated by the department on the basis of repeat sample results unless all repeat samples collected at the same tap as the original total coliform-positive sample are also total coliform-positive, and all repeat samples collected within 5 service connections of the original tap are total coliform-negative, for example, the department will not invalidate a total coliform-positive sample on the basis of repeat samples if all the repeat samples are total coliform-negative, or if the public water system has only one service connection.

3. The department has substantial grounds to believe that a total coliform-positive result is due to a circumstance or condition which does not reflect water quality in the distribution system. In this case, the system owner or operator shall still collect all repeat samples required under sub. (2) (a) to (e), and shall use them to determine compliance with the MCL for total coliforms in s. NR 809.30. To invalidate a total coliform-positive sample under this paragraph, the decision with the rationale for the decision shall be documented in writing, approved by a qualified department official and available to the public for inspection. The document shall state the specific cause of the total coliform-positive sample, and what action the system owner or operator has taken or will take, to correct this problem. The department may not invalidate a total coliform-positive sample solely on the grounds that all repeat samples are total coliform-negative.

(c) A laboratory shall invalidate a total coliform sample if the sample produces a turbid culture in the absence of gas production using an analytical method where gas formation is examined for, example, the Multiple Tube Fermentation Technique, produces a turbid culture in the absence of an acid reaction in the Presence-Absence Coliform Test, or exhibits confluent growth or produces colonies too numerous to count with an analytical method using a membrane filter, for example, Membrane Filter Technique, except that a laboratory shall not invalidate a total coliform sample if total coliforms are detected. If a laboratory invalidates a sample because of such interference, the system owner or operator shall collect another sample from the same location as the original sample within 24 hours of being notified of the interference problem, and have it analyzed for the presence of total coliforms. The system owner or operator shall continue to re-sample every 24 hours and have the samples analyzed until it obtains a valid result. The department may waive the 24 hour time limit on a case-by-case basis.

(4) FECAL COLIFORMS OR ESCHERICHIA COLI (E. COLI) TESTING. (a) If any routine or repeat sample is total coliform-positive, the system owner or operator shall analyze that total coliform-positive culture medium to determine if fecal coliforms are present, except that the system may test for E. Coli in lieu of fecal coliforms. If fecal coliforms or E. Coli are present, the system owner or operator shall notify the department by the end of the

day when the system is notified of the test result, unless the system is notified of the result after normal department business hours, in which case the system owner or operator shall notify the department before the end of the next business day.

(b) The department may allow a public water system, on a case-by-case basis, to forgo fecal coliform or E. Coli testing on a total coliform-positive sample if that system owner or operator assumes that the total coliform-positive sample is fecal coliform-positive or E. Coli-positive. Accordingly, the system owner or operator shall notify the department as specified in par. (a) and the provisions of s. NR 809.30 (2) apply.

(5) GROUNDWATER SYSTEM RAW WATER SAMPLING. In addition to sampling from the distribution system, each supplier of water for a system providing disinfection shall obtain at least one sample every 3 months from each well prior to the point of any chemical addition. For waterworks which have more than one well in the same location and utilizing the same aquifer, the supplier of water may sample only one of the wells each time on an alternating basis. If a well has a high potential for contamination, the department may, in individual cases, require more frequent sampling.

(6) SURFACE WATER SYSTEM RAW WATER SAMPLING. At surface water facilities, the microbiological quality of the source water shall be monitored sufficiently to maintain quality control of the treatment process. Each plant shall establish a schedule subject to review and modification by the department.

Note: Generally, enumeration methods such as membrane filter or 5 tube fermentation tests and heterotrophic plate counts of the raw, settled and finished water on an established schedule will be necessary to meet this requirement.

(7) HETEROTROPHIC PLATE COUNTS. At all waterworks which have a potential for high total bacteria levels because of the water quality, the method of treatment, chemical addition or other cause, the department may require heterotrophic plate counts pursuant to an established schedule. Analyses shall be conducted in accordance with the analytical requirements in s. NR 809.311(1), Table F.

NR 809.311 Analytical requirements for microbiological contaminants

(1) ANALYTICAL METHODS. Analyses conducted to determine compliance with s. NR 809.31 shall be made in accordance with methods listed in Table F or methods approved by the EPA under Appendix A to Subpart C of Part 141--Alternative Testing Methods Approved for Analyses Under the Safe Drinking Water Act and published in the Federal Register.

TABLE F
SDWA Approved Methodology for Microbiological Measurements

	Methodology	**Standard Methods (18th Edition[1])**
Total Coliform Bacteria[8]	Multiple tube fermentation[3,4,5]	9221 A,B,C
	Membrane	9222 A,B,C
	Minimal Media ONPG-MUG Test[7]	9223
	Chromogenic/Fluorogenic[10]	see footnote 10
	Presence - Absence (P-A) Coliform	9221D

	Test[5,6]	
Fecal Coliform,	Fecal Coliform Multiple Tube(MPN)[9] Tests	9221E
	Fecal Coliform Membrane Filter (MF) Procedure	9222D
Escherichia coli	EC Medium + MUG[7]	908C (pp. 879)
	Nutrient Agar + MUG[7]	908B (pp. 874)
	Minimal Medium + MUG (MMO-MUG)[5,7]	908C or 908D (pp. 878-882)
Heterotrophic Plate Count[2]	Pour Plate Method	9215B

[1]Except where noted, all methods refer to the "Standard Methods for the Examination of Water and Wastewater", 18th Edition, American Public Health Association, American Water Works Association, Water Pollution Control Federation, 1992.
[2]The time from sample collection to initiation of analysis may not exceed 8 hours. Sample must be iced.
[3]Lactose broth, as commercially available, may be used in lieu of lauryl tryptse broth, if the system conducts at least 25 parallel tests between this medium and lauryl tryptose broth using the water normally tested, and this comparison demonstrates that the false-positive rate for total coliforms, using lactose broth, is less than 10 percent.
[4]If inverted tubes are used to detect gas production, the media should cover these tubes at least one-half to two-thirds after the sample is added.
[5]No requirement exists to run the completed phase on 10 percent of all total coliform-positive confirmed tubes.
[6]Six-times formulation strength may be used if the medium is filter-sterilized rather than autoclaved.
[7]The ONPG-MUG Test is also known as the Autoanalysis Colilert System.
[8]The time from sample collection to initiation of analysis should not exceed 30 hours. If the laboratory analyzes the sample between 30 and 48 hours after collection the results report must indicate that the results are possibly invalid.
[9]A-1 broth may be held up to three months in a tightly closed screwcap tube at 4°C.
[10]This is also known as the Colisure Test. The Colisure Test must be incubated for 28 hours before examining the results. If an examination of the results at 28 hours is not convenient, the results may be examined at any time between 28 and 48 hours. A description of the Colisure Test may be obtained from the Millipore Corp., Technical Services Department, 80 Ashby Road, Bedford, MA 01730.

(2) SAMPLE VOLUME. The standard sample volume required for total coliform analysis, regardless of analytical method used, is 100 ml.

(3) SAMPLE COLLECTION. Sample collection for microbiological contaminants under s. NR 809.30 shall be conducted using the sample preservation, containers and maximum holding time procedures specified below:

Sample Preservation Requirements and Holding Times for Microbiological Samples

Parameter	Preservation	Sample Holding Time	Extract
Coliform, E.Coli, Fecal Coliform	Cool, to10º C, Sodium Thiosulfate[1]	30 hours	
Heterotrophs	Room temperature Cool 4º	6 hours 24 hours	100 mL

[1] Sodium thiosulfate must be added to the sample container prior to adding water containing chlorine.

(4) LABORATORY CERTIFICATIION. Analyses under this section shall only be conducted by laboratories that have received certification under ch. ATCP 70 or approval by EPA.

(5) PRESENCE OR ABSENCE. Public water system owners or operators need only determine the presence or absence of total coliforms; a determination of total coliform density is not required.

Note: The coliform density may, however, be helpful in selecting a remedial option.

(6) REQUIRED METHOD. Samples collected to determine compliance with s. NR 809.30(1) shall be analyzed by the enzyme substrate test method.

(7) OTHER METHOD. The department may approve, on a case-by-case basis, other methods as prescribed in sub. (1), Table F for use in determining compliance with s. NR 809.30(1).

(8) SAMPLE INTEGRITY. If chlorine odor is present in a drinking water sample the laboratory shall test the sample for the presence of chlorine. If chlorine is detected in the sample, the laboratory shall reject the sample for analysis, based on the improper preservation. The public water system shall submit a new sample for analysis to replace the rejected sample.

NR 809.312 Compliance reporting for microbiological contaminants. (1) MCL VIOLATION REPORTING. When a sample collected under s. NR 809.31(1), (2) or (4) exceeds a maximum contaminant level in s. NR 809.30(1) or (2), the supplier of water shall report the violation to the department no later than the end of the next business day after it learns of the violation, and shall provide public notice of the violation in accordance with s. NR 809.951.

(2) MONITORING VIOLATION REPORTING. A public water supplier who has failed to comply with a coliform monitoring requirement shall report the monitoring violation to the department within 10 days after discovering the violation, and shall notify the public as specified in s. NR 809.952.

NR 809.32 Groundwater microbiological source water monitoring - General requirements.

(1)APPLICABILITY OF GROUNDWATER SOURCE MICROBIOLOGICAL CONTAMINANTS. (a) This section applies to all public water systems using groundwater, except for public water systems that combine all of their groundwater with surface water or with groundwater under the direct influence of surface water prior to surface water treatment.

(b) This section applies to any public water system meeting the applicability statement in sub. (1), including consecutive systems that receive finished groundwater from another system.

(2) COMPLIANCE DATE. Unless otherwise noted, all groundwater systems shall comply with the requirements of this section beginning December 1, 2009.

(3) REQUIREMENTS. All public water systems using groundwater as a source shall comply with the following requirements:

(a) Provide all information required by the department for sanitary surveys conducted under s. NR 809.35.

(b) Groundwater systems that do not treat all of their groundwater to at least 4-log treatment of viruses, using inactivation, removal, or a department-approved combination of 4-log virus inactivation and removal before or at the first customer, shall meet all the microbiological source water monitoring requirements under s. NR 809.325.

(c) Groundwater systems that have fecally contaminated source waters, as determined by source water monitoring conducted under NR 809.325, or have significant deficiencies that are identified by the department or that are identified by EPA, under Subpart S of 40 CFR part 141 of the U.S. Code, shall meet the treatment technique requirements in s. NR 809.327. Groundwater system with fecally contaminated source water or with significant deficiencies are subject to the treatment technique requirements of s. NR 809.327 and shall implement one or more of the following corrective action options:

1. Correct all significant deficiencies.
2. Provide an alternate source of water.
3. Eliminate the source of contamination.
4. Provide treatment that reliably achieves at least 4-log treatment of viruses, before or at the first customer.

(d) Groundwater systems that provide at least 4-log treatment of viruses before or at the first customer shall conduct compliance monitoring to demonstrate treatment effectiveness, as required under s. NR 809.327(3).

NR 809.323 Analytical requirements for groundwater source microbiological contaminants. **(1)** ANALYTICAL METHODS. (a) A groundwater system subject to the source water monitoring requirements of s. NR 809.325(2) shall collect a standard sample volume of at least 100 mL for E. coli analysis regardless of the analytical method used.

(b) A groundwater system shall analyze all groundwater source samples, collected under s. NR 809.325(2), using one of the analytical methods listed in Table G for the presence of E. coli. If the department requires a system to test for the presence of enterococci or colipahage, the system shall use one of the method listed in par. (c) Table G or methods approved by the EPA under Appendix A to Subpart C of Part 141--Alternative Testing Methods Approved for Analyses Under the Safe Drinking Water Act and published in the Federal Register.

(c) Sample volumes of at least 100 mL shall be used for all analyses using the methods in Table G. Analyses shall be conducted in accordance with the documents listed in the footnotes to Table G.

Table G
Analytical Methods for Source Water Monitoring

Fecal indicator [1]	Methodology	Method citation
E. coli	Colilert [3]	9223 B [2]
	Colisure [3]	9223 B [2]
	Membrane Filter Method EPA Method with MI Agar.	1604 [4]
	m-ColiBlue24 Test [5]	
	E*Colite Test [6]	
	EC-MUG [7]	9221 F [2]
	NA-MUG [7]	9222 G [2]
Enterococci	Multiple-Tube Technique.	9230B [2]
	Membrane Filter Technique.	9230C [2]
	Membrane Filter EPA Method Technique.	1600 [8]
	Enterolert [9]	
Coliphage	Two-Step Enrichment EPA Method Presence-Absence Procedure.	1601[10]
	Single Agar Layer EPA Method Procedure.	1602 [11]

Copies of the documents listed in the footnotes may be obtained from the sources listed in the footnotes. Copies may be inspected at EPA's Drinking Water Docket, EPA West, 1301 Constitution Avenue, NW., Room B102, Washington DC 20460, Telephone: 202-

566-2426, or at the National Archives and Records Administration (NARA). For information on the availability of this material at NARA, call 202-741- 6030, or go to: http://www.archives.gov/federal_register/code_of_federal_regulations/ibr_locations.html.

[1]The time from sample collection to initiation of analysis may not exceed 30 hours. The groundwater system is encouraged but is not required to hold samples below 10[deg]C during transit.

[2]Methods are described in Standard Methods for the Examination of Water and Wastewater 20th edition (1998) and copies may be obtained from the American Public Health Association, 1015 Fifteenth Street, NW., Washington, DC 20005-2605.

[3]Medium is available through IDEXX Laboratories, Inc., One IDEXX Drive, Westbrook, Maine 04092.

[4]EPA Method 1604: Total Coliforms and Escherichia coli in Water by Membrane Filtration Using a Simultaneous Detection Technique (MI Medium); September 2002, EPA 821-R-02-024. Method is available at http://www.epa.gov/nerlcwww/1604sp02.pdf or from EPA's Water Resource Center (RC-4100T), 1200 Pennsylvania Avenue, NW., Washington, DC 20460.

[5] A description of the m-ColiBlue24 Test, ``Total Coliforms and E. coli Membrane Filtration Method with m-ColiBlue24® Broth," Method No. 10029 Revision 2, August 17, 1999, is available from Hach Company, 100 Dayton Ave., Ames, IA 50010 or from EPA's Water Resource Center (RC-4100T), 1200 Pennsylvania Avenue, NW., Washington, DC 20460.

[6]A description of the E*Colite Test, ``Charm E*Colite Presence/Absence Test for Detection and Identification of Coliform Bacteria and Escherichia coli in Drinking Water, January 9, 1998, is available from Charm Sciences, Inc., 659 Andover St., Lawrence, MA 01843-1032 or from EPA's Water Resource Center (RC-4100T), 1200 Pennsylvania Avenue, NW., Washington, DC 20460.

[7] EC-MUG (Method 9221F) or NA-MUG (Method 9222G) can be used for E. coli testing step as described in Sec. 141.21(f)(6)(i) or (ii) after use of Standard Methods 9221 B, 9221 D, 9222 B, or 9222 C.

[8] EPA Method 1600: Enterococci in Water by Membrane Filtration Using membrane-Enterococcus Indoxyl-[beta]-D-Glucoside Agar (mEI) EPA 821-R- 02-022 (September 2002) is an approved variation of Standard Method 9230C. The method is available at http://www.epa.gov/nerlcwww/1600sp02.pdf or from EPA's Water Resource Center (RC-4100T), 1200 Pennsylvania Avenue, NW., Washington, DC 20460. The holding time and temperature for groundwater samples are specified in footnote 1 above, rather than as specified in Section 8 of EPA Method 1600.

[9] Medium is available through IDEXX Laboratories, Inc., One IDEXX Drive, Westbrook, Maine 04092. Preparation and use of the medium is set forth in the article ``Evaluation of Enterolert for Enumeration of Enterococci in Recreational Waters," by Budnick, G.E., Howard, R.T., and Mayo, D.R., 1996, Applied and Environmental Microbiology, 62:3881-3884.

[10] EPA Method 1601: Male-specific (F+) and Somatic Coliphage in Water by Two-step Enrichment Procedure; April 2001, EPA 821-R-01-030. Method is available at

http://www.epa.gov/nerlcwww/1601ap01.pdf or from EPA's Water Resource Center (RC-4100T), 1200 Pennsylvania Avenue, NW., Washington, DC 20460.

[11] EPA Method 1602: Male-specific (F+) and Somatic Coliphage in Water by Single Agar Layer (SAL) Procedure; April 2001, EPA 821-R-01-029. Method is available at http://www.epa.gov/nerlcwww/1602ap01.pdf or from EPA's Water Resource Center (RC-4100T), 1200 Pennsylvania Avenue, NW., Washington, DC 20460.

(2) INVALIDATION OF AN E. COLI-POSITIVE GROUNDWATER SOURCE SAMPLE. (a) The department may invalidate an E. coli-positive groundwater source sample collected under s. NR 809.325(2) under the conditions specified in subd. 1. or 2.

1. The system provides the department with written notice from the laboratory that improper sample analysis occurred.

2. The department determines and documents in writing that there is substantial evidence that an E. coli-positive groundwater source sample is not related to source water quality.

(b) If the department invalidates an E. coli-positive groundwater source sample, the groundwater system shall collect another source water sample under s. NR 809.325(2) no later than 24 hours after being notified by the department that the sample has been invalidated. The system shall have the sample analyzed for E. coli using the analytical methods in s. NR 809.323(1) (b) Table G.

(c)The department may extend the 24-hour time limit on a case-by-case basis if the system cannot collect the source water sample within the 24-hour time limit due to circumstances beyond the system's control. In the case of an extension, the department shall specify in writing how much time the system has to collect the sample.

NR 809.325 Groundwater source microbial monitoring requirements. **(1)** SAMPLING LOCATION. (a) Any groundwater source sample required under sub. (2) shall be collected at a location prior to any treatment of the groundwater source unless the department approves a sampling location after treatment.

(b) If the system's configuration does not allow for sampling at the well itself, the system may collect a sample at a department-approved location to meet the requirements of par. (a), if the sample is representative of the source water quality of that well.

(c) Source water samples taken in response to positive total coliform samples collected under s. NR 809.31 shall be referred to as triggered source water samples.

(2) TRIGGERED SOURCE WATER MONITORING. (a) Groundwater systems shall conduct triggered source water monitoring if all of the following conditions exist.

1. The system does not provide at least 4-log treatment of viruses before or at the first customer for each groundwater source.

2. The system is notified that a sample collected under s. NR 809.31(1) is total coliform-positive and the sample is not invalidated under s. NR 809.31(3).

(b) The following sampling requirements apply:

1. No later than 24 hours after notification of a total coliform-positive distribution system sample, a groundwater system shall collect at least one groundwater source sample, for each total coliform-positive sample, from each groundwater source in use at the time the total coliform-positive sample was collected, except as provided in par. (c).

2. The department may extend the 24-hour time limit on a case-by-case basis if the system cannot collect the groundwater source water sample within the 24-hour time limit due to circumstances beyond the system's control. In the case of an extension, the department shall specify, in writing, how much time the system has to collect the sample.

3. If approved by the department, systems with more than one groundwater source may meet the requirements of this paragraph by sampling a representative groundwater source or sources if they have an approved triggered source water monitoring plan.

(c) A triggered source water monitoring plan shall evaluate each sample site in the system's sample siting plan under s. NR 809.31(1) (a) and identify the sources that are representative of each monitoring site. If directed by the department, systems shall submit for department approval a triggered source water monitoring plan that identifies one or more groundwater sources that are representative of each monitoring site in the system's sample siting plan and that the system intends to use for representative sampling under sub. (b).

(d) A groundwater system serving 1,000 people or fewer may use a repeat sample collected from a groundwater source to meet both the requirements of s. NR 809.31(2) and to satisfy the monitoring requirements of par. (b) for that groundwater source. If the repeat samples collected from the groundwater source are E. coli positive, the system shall comply with the requirements of par. (e) unless the department requires immediate corrective action under s. NR 809.327(2) (b).

(e) If the department does not require corrective action under s. NR 809.327(2) (b) for an E. coli-positive source water sample collected under par. (b), the system shall collect five additional source water samples from the same source no later than 24 hours after being notified of the E. coli positive sample. If any of the 5 samples collected under this paragraph is E. coli-positive, the system shall conduct a corrective action as outlined in s. NR 809.327(2).

(3) CONSECUTIVE AND WHOLESALE SYSTEMS. (a) In addition to the other requirements of this section, a consecutive groundwater system that has a total coliform-positive sample collected under s. NR 809.31(2) shall notify any wholesale system from which it receives water no later than 24 hours after being notified of the total coliform-positive sample.

(b) A wholesale groundwater system that receives notice from a consecutive system it serves that a sample collected under s. NR 809.31(2) was total coliform-positive shall, no later than 24 hours after being notified, collect samples from its groundwater sources under sub. (2)(b) and analyze them for E. coli under s. NR 809.323(1)(b) Table G. The department may extend the 24-hour time limit on a case-by-case basis if the system cannot collect the groundwater source water sample within the 24-hour time limit due to circumstances beyond the system's control. In the case of an extension, the department shall specify, in writing, how much time the system has to collect the sample.

(c) If the sample collected under par. (b) is E. coli-positive, the wholesale groundwater system shall notify all consecutive systems served by that groundwater source no later than 24 hours after being notified of the groundwater source sample monitoring result and shall meet the requirements of sub. (2)(d) unless the department requires immediate corrective action under s. NR 809.327(2)(b).

(4) EXCEPTION TO THE TRIGGERED SOURCE WATER MONITORING REQUIREMENTS.

(a) A groundwater system is not required to comply with the triggered source water monitoring requirements of sub. (2) if the department determines, and documents in writing, that the total coliform-positive sample collected under s. NR 809.31(2) was caused by a distribution system deficiency.

(5) FAILURE TO MEET MONITORING REQUIREMENTS. If a system fails to meet any of the monitoring requirements of subs. (1) to (3), the system is in violation and is required to complete public notification requirements under NR 809.95.

(6) PUBLIC NOTIFICATION. A groundwater system with a groundwater source sample collected under pars. (2) or (3) that is fecal indicator-positive and that is not invalidated under s. NR 809.323, including consecutive systems served by the groundwater source, must conduct public notification under s NR 809.951(1)(b)9.

NR 809.327 Compliance requirements for groundwater source microbial monitoring.

(1) COMPLIANCE REQUIREMENTS. Treatment technique submittal requirements for systems with significant deficiencies or confirmed source water fecal contamination are as follows:

(a) No later than 30 days after receiving written notice from the department, groundwater systems with significant deficiencies or source water fecal contamination shall consult with the department regarding appropriate corrective action, unless the department directs the groundwater system to implement a specific corrective action.

(b) If the department specifies interim measures for protection of the public health, pending department approval of the corrective action plan and schedule or pending completion of the corrective action plan, the system shall comply with these interim measures in addition to the other requirements of this section.

(c) No later than 120 days after receiving written notification from the department of a significant deficiency, or confirmed source water fecal contamination, the groundwater system shall have one of the following:

1. A completed corrective action in accordance with the applicable department plan review processes contained in ch. NR 811 for community systems or ch. NR 812 for noncommunity systems.

2. A written and approved department corrective action plan and schedule.

(2) CORRECTIVE ACTION ALTERNATIVES. Groundwater systems receiving written notice from the department of significant deficiencies under s. NR 809.35 or confirmed source water fecal contamination under s. NR 809.325 shall implement one or more of the following corrective action alternatives:

(a) Correct all significant deficiencies.

(b) Provide an alternate source of water.

(c) Eliminate the source of contamination.

(d) Provide treatment that reliably achieves at least 4-log treatment of viruses before or at the first customer for the groundwater source.

(3) NOTIFICATION AND SUBMITTAL REQUIREMENTS FOR SYSTEMS PROVIDING 4 LOG TREATMENT OF VIRUSES.

(a) A public water supply system that has an existing or new groundwater source and serves customers on or after November 30, 2009 and provides department-approved

treatment that achieves 4 log inactivation or removal of viruses before the first customer, is not required to meet the triggered source water monitoring requirements of s. NR 809.325(2) if all of the following conditions are met:

1. The system notifies the department in writing that it provides at least 4-log treatment of viruses.

2. The notification to the department includes a submittal for review that includes the engineering and operational information that the department will need to evaluate the adequacy of the treatment.

3. The system provides any other information that the department requests to aid in its evaluation of the sufficiency of the system's treatment process for viruses.

(b) A public water system that provides at least 4-log treatment of viruses before or at the first customer and places a new groundwater source into service after November 30, 2009, is not required to meet the triggered source water monitoring requirements of NR 809.325 if the system complies with all of the following requirements:

1. The system notifies the department in writing that it provides at least 4-log treatment of viruses before or at the first customer for the groundwater source.

2. Notification to the department includes engineering, operational, or other information that the department requests to evaluate the submission.

3. The system conducts compliance monitoring as required under sub. (4) within 30 days of placing the source in service.

(c) If a system subsequently discontinues 4-log treatment of viruses before or at the first customer for a groundwater source, the system shall conduct triggered source water monitoring in accordance with the requirements of s. NR 809.325(2).

(4) TREATMENT COMPLIANCE MONITORING. A groundwater system that provides 4 log treatment of viruses shall monitor the effectiveness and reliability of treatment for that groundwater source before or at the first customer as follows:

(a) Chemical disinfection.

1. All community public water systems shall continuously monitor the residual disinfectant concentration using analytical methods and requirements specified in s. NR 809.563 at a location approved by the department and shall record the lowest residual disinfectant concentration each day that water from the groundwater source is served to the public, unless the department allows less frequent monitoring as outlined in subd 2.

a. The groundwater system shall maintain the department determined residual disinfectant concentration every day the system serves water from the groundwater source to the public.

b. If there is a failure in the continuous monitoring equipment, the system shall conduct grab sampling every four hours until the continuous monitoring equipment is returned to service.

c. The system shall resume continuous residual disinfectant monitoring, as soon as possible, but no later than 14 days after the failure.

2. Community water systems serving 3,300 or fewer people shall be allowed to monitor the residual disinfectant concentration less than continuously, if the system receives approval under s. NR 811.48(3)(b) to monitor less than continuously. The monitoring shall be done using analytical methods and requirements specified in s. NR 809.563 at a location approved by the department and the residual disinfection concentration shall be recorded from that water every day the groundwater source is served to the public.

a. The groundwater system shall maintain the department determined residual disinfectant concentration every day the groundwater system serves water from the groundwater source to the public. The groundwater system shall take a daily grab sample during the hour of peak flow or at another time specified by the department.

b. If any daily grab sample measurement falls below the department determined residual disinfectant concentration, the system shall take follow-up samples at the frequency determined by the department under s. NR 811.43(3)(b) but no less than four hours until the residual disinfectant concentration is restored to the department determined level.

3. Non-community systems serving 3,300 or fewer people, unless otherwise required by the department under ch. NR 812, shall monitor the residual disinfectant concentration using analytical methods and requirements specified in s. NR 809.563 at a location approved by the department and record the residual disinfection concentration once each day that water from the groundwater source is served to the public.

a. The groundwater system shall maintain the department determined residual disinfectant concentration every day the groundwater system serves water from the groundwater source to the public. The groundwater system shall take a daily grab sample during the hour of peak flow or at another time specified by the department.

b. If any daily grab sample measurement falls below the department determined residual disinfectant concentration, the system shall take follow-up samples every four hours until the residual disinfectant concentration is restored to the department determined level.

c. Alternatively, non-community groundwater systems that serve 3,300 or fewer people may monitor continuously in order to meet the requirements of subd. 1.

(b) Membrane filtration. A groundwater system that uses membrane filtration to meet the requirements of s. NR 809.327(2) shall monitor the membrane filtration process in accordance with all department specified monitoring requirements and shall operate the membrane filtration in accordance with all department specified compliance requirements. To be in compliance with the requirement to achieve at least 4-log treatment of viruses when a system uses membrane filtration exclusively, the system shall meet all of the following:

1. The membrane shall have an absolute molecular weight cut-off (MWCO), or an alternate parameter that describes the exclusion characteristics of the membrane, that can reliably achieve at least 4-log removal of viruses.

2. The membrane process shall be operated in accordance with department-specified compliance requirements.

3. The integrity of the membrane is intact.

4. The system shall provide at least 2 log of additional treatment of viruses using a chemical disinfectant.

(c) Alternative treatment. A groundwater system that uses a department-approved alternative treatment to meet the requirements of sub. (2)(d) for providing at least 4-log treatment of viruses before or at the first customer shall do all of the following:

1. Monitor the alternative treatment in accordance with all department specified monitoring requirements.

2. Operate the alternative treatment in accordance with all compliance requirements that the department determines to be necessary to achieve at least 4-log treatment of viruses.

(5) DISCONTINUING TREATMENT. A groundwater system may discontinue 4-log treatment of viruses before or at the first customer for a groundwater source if the department determines and documents in writing that 4-log treatment of viruses is no longer necessary for that water source. A system that discontinues 4-log treatment of viruses is subject to the source water monitoring requirements of s. NR 809.325.

(6) FAILURE TO MEET MONITORING REQUIREMENTS. If a system fails to meet any of the monitoring requirements of sub. (4), the system is in violation and is required to complete public notification requirements under s. NR 809.952.

NR 809.328 Treatment technique compliance for groundwater source microbial contaminants (1) TREATMENT TECHNIQUE VIOLATIONS FOR GROUNDWATER SYSTEMS. (a) A groundwater system with a significant deficiency is in violation of the treatment technique requirement if, within 120 days of receiving written notice from the department of the significant deficiency or earlier if directed by the department, the system does not meet subd. 1. or 2.:

1. The system has not completed a corrective action in accordance with any applicable department plan approval processes under chs. NR 811 and NR 812, including any department specified interim actions.

2. The system is not in compliance with a department-approved corrective action plan and schedule.

(b) Unless the department invalidates an E. coli-positive groundwater source sample collected under s. NR 809.325, a system is in violation of the treatment technique requirement under s. NR 809.327 if within 120 days or earlier if directed by the department, the system does not meet the conditions of subd. 1. or 2.

1. The system does not complete corrective action in accordance with any applicable department plan review processes under chs. NR 811 and NR 812, including department specified interim measures.

2. The system is not in compliance with a department-approved corrective action plan and schedule.

(c) A groundwater system subject to the requirements of s. NR 809.327(4) that fails to maintain at least 4-log treatment of viruses before or at the first customer for a groundwater source is in violation of the treatment technique requirement if the failure is not corrected within 4 hours of determining the system is not maintaining at least 4-log treatment of viruses before or at the first customer.

(d) Groundwater systems shall give public notification under NR 809.952 for the treatment technique violations specified under this section.

NR 809.329 Reporting and recordkeeping requirements for groundwater systems. (1) REPORTING. In addition to the requirements of ss. NR 809.31 and 809.80, a groundwater system regulated under s. NR 809.32 shall provide the following information to the Department:

(a) A groundwater system conducting compliance monitoring under s. NR 809.327(3) shall notify the department any time the system fails to meet any department-specified

requirements including, but not limited to, minimum residual disinfectant concentration, membrane operating criteria or membrane integrity, and alternative treatment operating criteria, if the operation is not restored in accordance with the criteria or requirements within four hours. The system shall notify the department as soon as possible, but in no case later than the end of the next business day after the failure.

(b) After completing any corrective action under s. NR 809.327(2), a groundwater system shall notify the Department within 30 days of completion of the corrective action.

(2) RECORDKEEPING. In addition to the requirements of s. NR 809.80, a groundwater system regulated under s. NR 809.32 shall maintain the following information in its records:

(a) Documentation of corrective actions. Documentation shall be kept for a period of not less than ten years.

(b) Documentation of notice to the public as required under s. NR 809.80. Documentation shall be kept for a period of not less than three years.

(c) Records of decisions under s. NR 809.325(4) and records of invalidation of an E. coli-positive groundwater source sample under s. NR 809.323(2). Documentation shall be kept for a period of not less than five years.

(d) For consecutive systems, documentation of notification to its wholesale systems of total-coliform positive samples that are not invalidated under s. NR 809.325(3). Documentation shall be kept for a period of not less than five years.

(e) For systems, including wholesale systems, which are required to perform compliance monitoring under s. NR 809.327(3) all of the following apply:

1. Records of the department specified minimum disinfectant residual. Documentation shall be kept for a period of not less than ten years.

2. Records of the lowest daily residual disinfectant concentration and records of the date and duration of any failure to maintain the department prescribed minimum residual disinfectant concentration for a period of more than four hours. Documentation shall be kept for a period of not less than five years.

3. Records of department-specified compliance requirements for membrane filtration and of parameters specified by the department for department-approved alternative treatment and records of the date and duration of any failure to meet the membrane operating, membrane integrity, or alternative treatment operating requirements for more than 4 hours. Documentation shall be kept for a period of not less than five years.

NR 809.33 Surface water microbiological organisms and indicators. (1) GENERAL REQUIREMENTS. The requirements in this section establish or extend treatment techniques in lieu of maximum contaminant levels for *Cryptosporidium.* These requirements are in addition to requirements for filtration and disinfection in subch. II of ch. NR 810.

(2) APPLICABILITY. These requirements apply to all surface water and GWUDI public water systems.

(a) Wholesale systems that supply water from a surface water or GWUDI source shall comply with the requirements of this section based on the population of the largest system in the combined distribution system.

(b) The requirements of this section for filtered systems apply to all systems required by s. NR 810.29 to provide filtration treatment, whether or not the system is currently operating a filtration system.

(c) The requirements of this section for unfiltered systems apply only to unfiltered systems that met and continue to meet the filtration avoidance criteria in s. NR 810.30 as applicable.

(3) REQUIREMENTS. Systems subject to this section must comply with the following requirements:

(a) The following monitoring is required under this section:

1. Systems shall have conducted and submitted to EPA an initial round of source water monitoring for treatment plants existing as of January 5, 2006 under 40 CFR part 141 National Primary Drinking Water Regulations Subpart W that determined the level of treatment for *Cryptosporidium* needed under s. NR 810.34.

2. Systems shall conduct source water monitoring as part of the treatment approval process for plants constructed after January 5, 2006 under s. NR 811.18(1)(f). This monitoring shall include *Cryptosporidium, E. coli,* and turbidity to determine what level of *Cryptosporidium* treatment shall be provided using the requirements of the bin classifications under s. NR 810.34.

3. A second round of source water monitoring for each plant that treats a surface water or GWUDI source shall be conducted and submitted to the department as required in s. NR 809.331(2). This monitoring may include sampling for *Cryptosporidium, E. coli,* and turbidity as described in ss. NR 809.331 to 809.336, to determine what level, if any, of additional *Cryptosporidium* treatment the system shall provide.

(b) Systems that plan to make a significant change to their disinfection practice must develop disinfection profiles and calculate disinfection benchmarks, as described in s. NR 810.32.

(c) Filtered systems must determine their *Cryptosporidium* treatment bin classification as described in s. NR 810.34 and provide additional treatment for *Cryptosporidium,* if required, as described in s. NR 810.35. All unfiltered systems must provide treatment for *Cryptosporidium* as described in s. NR 810.36. Filtered and unfiltered systems must implement *Cryptosporidium* treatment according to the schedule in s. NR 810.37.

(d) Systems with uncovered finished water storage facilities must comply with the requirements to cover the facility or treat the discharge from the facility as described in s. NR 810.28.

(e) Systems required to provide additional treatment for *Cryptosporidium* must implement microbial toolbox options that are designed and operated as described in ss. NR 810.41 to 810.46.

(f) Systems must comply with the applicable recordkeeping and reporting requirements described in ss. NR 809.39 to 809.40.

(4) SURFACE WATER TREATMENT TECHNIQUE VIOLATIONS. Surface water and GWUDI systems are in violation of the treatment technique requirements for turbididty if any of the requirements of s. NR 810.29(1) to (4) are not met.

NR 809.331 Surface Water Source Monitoring. (1) INITIAL ROUND OF SOURCE WATER MONITORING. Systems shall have conducted the following monitoring according to the schedule in sub. (3) Table H, at treatment plants existing as of January 5, 2006 unless they meet the monitoring exemption criteria in sub. (4). The initial source water monitoring requirements were conducted under 40 CFR part 141 National Primary Drinking Water Regulations Subpart W with EPA wholly responsible for

implementation. For systems with treatment plants constructed after January 5, 2006 the department may require the following initial monitoring as part of the approval process under s. NR 811.18(1)(f).

(a) Filtered systems serving at least 10,000 people shall sample their source water for *Cryptosporidium*, *E. coli*, and turbidity at least monthly for 24 months.

(b) Unfiltered systems serving at least 10,000 people shall sample their source water for *Cryptosporidium* at least monthly for 24 months.

(c) Filtered systems serving fewer than 10,000 people shall sample their source water for *E. coli* at least once every two weeks for 12 months. A filtered system serving fewer than 10,000 people may avoid *E. coli* monitoring if the system notifies the department that it will monitor for *Cryptosporidium* as described in sub. (3). The system shall notify the department no later than 3 months prior to the date the system is required to start *E. coli* monitoring under sub. (3).

(d) Filtered systems serving fewer than 10,000 people shall sample their source water for *Cryptosporidium* at least twice per month for 12 months or at least monthly for 24 months if based on monitoring conducted under par. (c), and if they meet one of the following:

1. For systems using lake or reservoir sources, the annual mean *E. coli* concentration is greater than 10 *E. coli* /100 mL.
2. For systems using flowing stream sources, the annual mean *E. coli* concentration is greater than 50 *E. coli* /100 mL.
3. The system does not conduct *E. coli* monitoring as described in par. (c).
4. Systems using groundwater under the direct influence of surface water (GWUDI) shall comply with the requirements of this par. based on the *E. coli* level that applies to the nearest surface water body. If no surface water body is nearby, the system shall comply based on the requirements that apply to systems using lake or reservoir sources.

(e) For filtered systems serving fewer than 10,000 people, the department may approve monitoring for an indicator other than *E. coli* under par. (c). The department also may approve an alternative to the *E. coli* concentration in subds. (d) 1. to 3. to trigger *Cryptosporidium* monitoring. This approval by the department shall be provided to the system in writing and shall include the basis for the department's determination that the alternative indicator or trigger level will provide a more accurate identification of whether a system will exceed the Bin 1 *Cryptosporidium* level in s. NR 810.34.

(f) Unfiltered systems serving fewer than 10,000 people shall sample their source water for *Cryptosporidium* at least twice per month for 12 months or at least monthly for 24 months.

(g) Systems may sample more frequently than required under this section if the sampling frequency is evenly spaced throughout the monitoring period.

(2) SECOND ROUND OF SOURCE WATER MONITORING. Systems shall conduct a second round of source water monitoring that meets the requirements for monitoring parameters, frequency, and duration described in sub. (1), unless they meet the monitoring exemption criteria in sub. (4). Systems shall conduct this monitoring on the schedule in sub. (3).

(3) MONITORING SCHEDULE. According to EPA requirements, systems shall begin the monitoring required in subs. (1) and (2) no later than the month beginning with the date listed in this table:

Table H

Source Water Monitoring Starting Dates

Systems that serve . . .	**The initial round of source water monitoring shall begin no later than the month beginning :**	**The second round of source water monitoring shall begin no later than the month beginning :**
(1) At least 100,000 people	October 1, 2006	April 1, 2015.
(2) From 50,000 to 99,999 people	April 1, 2007	October 1, 2015.
(3) From 10,000 to 49,999 people	April 1, 2008	October 1, 2016.
(4) Fewer than 10,000 and monitor for *E. coli* [a]	October 1, 2008	October 1, 2017.
(5) Fewer than 10,000 and monitor for *Cryptosporidium* [b]	April 1, 2010	April 1, 2019.

[a]Applies only to filtered systems.
[b]Applies to filtered systems that meet the conditions of sub. (1)(e) and unfiltered systems.

(4) MONITORING AVOIDANCE. (a) Filtered systems are not required to conduct source water monitoring under this section if the system will provide a total of at least 5.5-log of treatment for *Cryptosporidium,* equivalent to meeting the treatment requirements of Bin 4 in s. NR 810.35.

(b) Unfiltered systems are not required to conduct source water monitoring under this section if the system will provide a total of at least 3-log *Cryptosporidium* inactivation, equivalent to meeting the treatment requirements for unfiltered systems with a mean *Cryptosporidium* concentration of greater than 0.01 oocysts/L in s. NR 810.36.

(c) If a system chooses to provide the level of treatment in par. (a) or (b), as applicable, rather than start source water monitoring, the system must notify the department in writing no later than the date the system is otherwise required to submit a sampling schedule for monitoring under s. NR 809.332. Alternatively, a system may choose to stop sampling at any point after it has initiated monitoring if it notifies the department in writing that it will provide this level of treatment. Systems shall install and operate technologies to provide this level of treatment by the applicable treatment compliance date in s. NR 810.37.

(5) PLANTS OPERATING ONLY PART OF THE YEAR. Systems with surface water treatment plants that operate for only part of the year shall conduct source water monitoring in accordance with this section, but with the following modifications:

(a) Systems must sample their source water only during the months that the plant operates unless the department specifies another monitoring period based on plant operating practices.

(b) Systems with plants that operate less than six months per year and that monitor for *Cryptosporidium* shall collect at least six *Cryptosporidium* samples per year during each of two years of monitoring. Samples must be evenly spaced throughout the period the plant operates.

(6) NEW SOURCES. (a) A system that begins using a new source of surface water or GWUDI after the system is required to begin monitoring under sub. (3) must monitor the new source on a schedule the department approves. Source water monitoring shall meet the requirements of this section. The system must also meet the bin classification and *Cryptosporidium* treatment requirements of ss. NR 810.34 and 810.35 or s. NR 810.36, as applicable, for the new source on a schedule the department approves.

(b) The requirements of this section apply to systems with surface water treatment plants that begin operation after the monitoring start date applicable to the system's size under sub. (3).

(c) The system shall begin a second round of source water monitoring no later than 6 years following initial bin classification under s. NR 810.34 or determination of the mean *Cryptosporidium* level under s. NR 810.36, as applicable.

(7) MONITORING VIOLATION. Failure to collect any source water sample required under this section in accordance with the sampling schedule, sampling location, analytical method, approved laboratory, and reporting requirements of s. NR 809. 332 to s. NR 809.336 is a monitoring violation.

(8) GRANDFATHERING MONITORING DATA. Systems may use monitoring data collected prior to the applicable monitoring start date in sub. (3) to meet the initial source water monitoring requirements in sub. (1). This data, referred to as grandfathered data, may substitute for an equivalent number of months of data at the end of the monitoring period. All data submitted under this section shall meet the requirements in s. NR 809.337.

NR 809.332 Sampling schedules for surface water source water monitoring. (1) SAMPLING SCHEDULES. Systems required to conduct source water monitoring under s. NR 809.331 shall submit a sampling schedule that specifies the calendar dates when the system will collect each required sample.

(a) Systems shall submit sampling schedules no later than 3 months prior to the applicable date listed in s. NR 809.331(3), Table H, for each round of required monitoring.

(b) Systems serving at least 10,000 people shall submit their sampling schedule for the initial round of source water monitoring under s. NR 809.331(1) to EPA electronically at https://intranet.epa.gov/lt2/. If a system is unable to submit the sampling schedule electronically, the system may use an alternative approach for submitting the sampling schedule subject to EPA approval.

(c) Systems serving fewer than 10,000 people shall submit their sampling schedules for the initial round of source water monitoring under s. NR 809.331 (1) to the EPA or the department.

(d) Systems shall submit sampling schedules for the second round of source water monitoring under s. 809.331 (2) to the department.

(e) If EPA or the department does not respond to a system regarding its sampling schedule, the system shall sample at the reported schedule.

(2) SAMPLE COLLECTION. Systems shall collect samples no later than two days before or two days later than the dates indicated in their sampling schedule. Thus samples shall be collected within a five-day period around the scheduled date, unless one of the conditions of par. (2) (a) or (b) applies.

(a) If an extreme condition or situation exists that may pose danger to the sample collector, or that cannot be avoided and causes the system to be unable to sample in the scheduled five-day period, the system shall sample as close to the scheduled date as feasible unless the department approves an alternative sampling date. The system shall submit an explanation for the delayed sampling date to the department concurrent with the shipment of the sample to the laboratory.

(b) If a system is unable to report a valid analytical result for a scheduled sampling date due to equipment failure, loss of or damage to the sample, failure to comply with the analytical method requirements, including the quality control requirements in s. NR 809.334, or the failure of an approved laboratory to analyze the sample, then the system shall collect a replacement sample. The system shall collect the replacement sample no later than 21 days after receiving information that an analytical result cannot be reported for the scheduled date unless the system demonstrates that collecting a replacement sample within this time frame is not feasible or the department approves an alternative resampling date. The system shall submit an explanation for the delayed sampling date to the department concurrent with the shipment of the sample to the laboratory.

(3) REVISING SAMPLING SCHEDULES. Systems that fail to meet the criteria of sub. (2) for any source water sample required under s. NR 809.331 shall revise their sampling schedules to add dates for collecting all missed samples. Systems shall submit the revised schedule to the department for approval before the system begins collecting the missed samples.

809.333 Sampling locations for surface water source water monitoring. (1) GENERAL REQUIREMENTS. Systems required to conduct source water monitoring under s. NR 809.331 shall collect samples for each plant that treats a surface water or GWUDI source. Where multiple plants draw water from the same influent, such as the same pipe or intake, the department may approve one set of monitoring results to be used to satisfy the requirements of s. NR 809.331 for all plants.

(2) SAMPLE COLLECTION LOCATION. Systems shall collect source water samples prior to chemical treatment, such as coagulants, oxidants and disinfectants, unless the system meets the condition of this subsection. The department may approve a system to collect a source water sample after chemical treatment if the department determines that collecting a sample prior to chemical treatment is not feasible for the system and that the chemical treatment is unlikely to have a significant adverse effect on the analysis of the sample.

(3) RECYCLED FILTER BACKWASH. Systems that recycle filter backwash water shall collect source water samples prior to the point of filter backwash water. All public water systems that recycle filter backwash water shall comply with all of the requirements under ss. NR 810.295, 811.860 and 809.862.

(4) BANK FILTRATION. (a) Systems that receive *Cryptosporidium* treatment credit for bank filtration under ss. NR 810.29(5) or 810. 37 (2), as applicable, shall collect source water samples in the surface water prior to bank filtration.

(b) Systems that use bank filtration as pretreatment to a filtration plant shall collect source water samples from the collector well after bank filtration. Use of bank filtration during monitoring shall be consistent with routine operational practice. Systems collecting samples after a bank filtration process may not receive treatment credit for the bank filtration under s. NR 810.43 (3).

(5) MULTIPLE SOURCES. Systems with plants that use multiple water sources, including multiple surface water sources and blended surface water and groundwater sources, shall collect samples as specified in par. (a) or (b). The use of multiple sources during monitoring shall be consistent with routine operational practice.

(a) If a sampling tap where the sources are combined prior to treatment is available, systems shall collect samples from that tap.

(b) If a sampling tap where the sources are combined prior to treatment is not available, systems shall collect samples at each source near the intake on the same day and must follow either subd. 1. or 2. for sample analysis.

1. Systems may composite samples from each source into one sample prior to analysis. The volume of sample from each source shall be weighted according to the proportion of the source in the total plant flow at the time the sample is collected.

2. Systems may analyze samples from each source separately and calculate a weighted average of the analysis results for each sampling date. The weighted average shall be calculated by multiplying the analysis result for each source by the fraction the source contributed to total plant flow at the time the sample was collected and then summing these values.

(6) ADDITIONAL REQUIREMENTS. Systems shall submit a description of their sampling locations to the department at the same time as the sampling schedule required under s. NR 809.332. This description shall address the position of the sampling location in relation to the system's water sources and treatment processes, including pretreatment, points of chemical treatment, and filter backwash recycle. If the department does not respond to a system regarding sampling locations, the system shall sample at the reported locations.

NR 809.334 Analytical methods for surface water source water monititoring. (1) CRYPTOSPORIDIUM. Systems shall analyze for *Cryptosporidium* using *Method 1623: Cryptosporidium and Giardia in Water by Filtration/IMS/FA*, 2005, United States Environmental Protection Agency, EPA–815-R–05–002 or *Method 1622: Cryptosporidium in Water by Filtration/IMS/FA*, 2005, United States Environmental Protection Agency, EPA–815–R–05–001, which are incorporated by reference or methods approved by the EPA under Appendix A to Subpart C of Part 141--Alternative Testing Methods Approved for Analyses Under the Safe Drinking Water Act and published in the Federal Register. The Director of the Federal Register approved incorporation by reference of these documents in accordance with 5 U.S.C. 552(a) and 1 CFR part 51. The system may obtain a copy of these methods online from *http://www.epa.gov/safewater/disinfection/lt2* or from the United States Environmental Protection Agency, Office of Groundwater and Drinking Water, 1201 Constitution Ave.,

NW, Washington, DC 20460, Telephone: 800–426–4791. The system may inspect a copy at the Water Docket in the EPA Docket Center, 1301 Constitution Ave., NW, Washington, DC, Telephone: 202–566–2426 or at the National Archives and Records Administration (NARA). For information on the availability of this material at NARA, call 202–741–6030, or go to:
h*ttp://www.archives.gov/federal_register/code_of_federal_regulations/ibr_locations.html*

(a) Systems shall analyze at least a 10 L sample or a packed pellet volume of at least 2 mL as generated by the methods listed in this subsection. Systems unable to process a 10 L sample shall analyze as much sample volume as can be filtered by two filters approved by EPA for the methods listed in this subsection, up to a packed pellet volume of at least 2 mL.

(b) Matrix spike (MS) samples, as required by the methods in this subsection, shall be spiked and filtered by a laboratory approved for *Cryptosporidium* analysis under s. NR 809.335. If the volume of the MS sample is greater than 10 L, the system may filter all but 10 L of the MS sample in the field, and ship the filtered sample and the remaining 10 L of source water to the laboratory. In this case, the laboratory shall spike the remaining 10 L of water and filter it through the filter used to collect the balance of the sample in the field.

(c) Flow cytometer-counted spiking suspensions shall be used for MS samples and ongoing precision and recovery (OPR) samples.

(2) E. COLI. Systems shall use methods for enumeration of E. coli in source water listed in Table I or methods approved by the EPA under Appendix A to Subpart C of Part 141--Alternative Testing Methods Approved for Analyses Under the Safe Drinking Water Act and published in the Federal Register.

.

Table I
E. coli Analytical Methods

Parameter and units	Method[1]	EPA	Standard methods 18th, 19th, 20th ed.	Standard methods online	AOAC, ASTM, USGS	Other
E. coli , number per 100 mL	MPN[2,3,6]multiple tube/multiple well		9223 B[5]	9223 B–97[13]	991.15[4]	Colilert®[5,8] Colilert-18®[5,7,8]

[1] The method must be specified when results are reported.
[2] Tests must be conducted to provide organism enumeration (density). Select the appropriate configuration of tubes/filtrations and dilutions/volumes to account for the quality, character, consistency, and anticipated organism density of the water sample.
[3] To assess the comparability of results obtained with individual methods, it is suggested that side-by-side tests be conducted across seasons of the year with the water samples routinely tested in accordance with the most current Standard Methods for the Examination of Water and Wastewater or EPA alternate test procedure (ATP) guidelines.
[4] AOAC. 1995. Official Methods of Analysis of AOAC International, 16th Edition, Volume I, Chapter 17. Association of Official Analytical Chemists International. 481 North Frederick Avenue, Suite 500, Gaithersburg, MD 20877–2417.

[5] These tests are collectively known as defined enzyme substrate tests, where, for example, a substrate is used to detect the enzyme β-glucuronidase produced by E. coli .
[6] Samples shall be enumerated by the multiple-tube or multiple-well procedure. Using multiple-tube procedures, employ an appropriate tube and dilution configuration of the sample as needed and report the Most Probable Number (MPN). Samples tested with Colilert®may be enumerated with the multiple-well procedures, Quanti-Tray®Quanti-Tray®2000, and the MPN calculated from the table provided by the manufacturer.
[7] Colilert-18®is an optimized formulation of the Colilert®for the determination of total coliforms and E. coli that provides results within 18 h of incubation at 35 °C rather than the 24 h required for the Colilert®test and is recommended for marine water samples.
[8] Descriptions of the Colilert®, Colilert-18®, Quanti-Tray®, and Quanti-Tray®/2000 may be obtained from IDEXX Laboratories, Inc., 1 IDEXX Drive, Westbrook, ME 04092.

(a) The time from sample collection to initiation of analysis may not exceed 30 hours unless the system meets the condition of par. (b).

(b) The department may approve on a case-by-case basis the holding of an *E. coli* sample for up to 48 hours between sample collection and initiation of analysis if the department determines that analyzing an *E. coli* sample within 30 hours is not feasible. *E. coli* samples held between 30 to 48 hours shall be analyzed by the Colilert reagent version of Standard Method 9223B as listed in sub. (2), Table I.

(c) Systems shall maintain samples between 0 °C and 10 °C during storage and transit to the laboratory.

(3) TURBIDITY. Systems shall use methods for turbidity measurement under s. NR 809.113(1) Table A.

NR 809.335 Approved laboratories for surface water source monitoring. (1) CRYPTOSPORIDIUM. Systems shall have *Cryptosporidium* samples analyzed by a laboratory that is approved under EPA's Laboratory Quality Assurance Evaluation Program for Analysis of *Cryptosporidium* in Water or a laboratory that has been certified for *Cryptosporidium* analysis by an equivalent department laboratory certification program.

(2) E. COLI. Any laboratory certified by the EPA, the National Environmental Laboratory Accreditation Conference or the department of agriculture, trade and consumer protection for total coliform or fecal coliform analysis under s. NR 809.323(1)(c), Table F is approved for *E. coli* analysis under this section when the laboratory uses the same technique for *E. coli* that the laboratory uses for s. NR 809.334(2), Table I.

(3) TURBIDITY. Measurements of turbidity shall be made by a party approved by the department.

NR 809.336 Reporting source water monitoring results. (1) Systems must report results from the source water monitoring required under s. NR 809.331(1) and (2) no later than 10 days after the end of the first month following the month when the sample is collected.

(a) All systems serving at least 10,000 people must report the results from the initial source water monitoring required under s. NR 809.331(1) to EPA electronically at https://intranet.epa.gov/lt2/.

(b) If a system is unable to report monitoring results electronically, the system may use an alternative approach for reporting monitoring results that EPA approves.

(2) Systems serving fewer than 10,000 people must report results from the initial source water monitoring required under s. NR 809.331(1) to the department.

(3) All systems must report results from the second round of source water monitoring required under s. NR 809.331(2) to the department.

(4) Systems must report the applicable information in par. (a) and (b) for the source water monitoring required under s. NR 809.331(1) and (2) .

(a) Systems must report the following data elements for each Cryptosporidium analysis:

Data element.
1. PWS ID.
2. Facility ID.
3. Sample collection date.
4. Sample type (field or matrix spike).
5. Sample volume filtered (L), to nearest 1/4 L.
6. Was 100% of filtered volume examined.
7. Number of oocysts counted.

1. For matrix spike samples, systems must also report the sample volume spiked and estimated number of oocysts spiked. These data are not required for field samples.

2. For samples in which less than 10 L is filtered or less than 100% of the sample volume is examined, systems must also report the number of filters used and the packed pellet volume.

3. For samples in which less than 100% of sample volume is examined, systems must also report the volume of resuspended concentrate and volume of this resuspension processed through immunomagnetic separation.

(b) Systems must report the following data elements for each E. coli analysis:

Data element.
1. PWS ID.
2. Facility ID.
3. Sample collection date.
4. Analytical method number.
5. Method type.
6. Source type (flowing stream, lake/reservoir, GWUDI).
7. E. coli /100 mL.

8. Turbidity.[1]

[1] Systems serving fewer than 10,000 people that are not required to monitor for turbidity under s. NR 809.331(1) and (2) are not required to report turbidity with their E. coli results.

NR 809.35 Sanitary survey requirements for all public water systems.

(1) SANITARY SURVEYS. (a) Community public water systems shall undergo a sanitary survey every 3 years, unless the system meets the requirements of sub. (2) for outstanding performance of a system, then a sanitary survey may be conducted every 5 years.

(b) Non-community water systems shall undergo a sanitary survey every 5 years.

(c) The department will review the results of each sanitary survey to determine whether the existing monitoring frequency is adequate and what additional measures, if any, the system needs to undertake to improve drinking water quality.

(d) Sanitary surveys shall be performed by the department or an agent approved by the department. If the department requests a system owner to have a sanitary survey performed, the system owner is responsible for ensuring the survey is completed.

(2) OUTSTANDING PERFORMANCE**.** (a) At the discretion of the department systems may be designated as demonstrating outstanding performance and eligible for a reduced frequency of sanitary surveys. For community systems determined by the department to have outstanding performance based on prior sanitary surveys, subsequent sanitary surveys may be conducted no less than every five years. The following criteria shall be used to determine outstanding performance:

1. No violations of MCLs since the last sanitary survey.
2. No violations of monitoring and reporting requirements since the last sanitary survey.
3. No violations of primary drinking water regulations during the past five years or similar time period.
4. No significant deficiencies shall have been identified in the current sanitary survey or the previous sanitary survey.
5. Existence of emergency preparedness measures and backup facilities.
6. Expert operation and management of the system, for example, skilled, certified personnel in adequate numbers, existence of quality O&M manuals that are used by the staff; adequate budget and revenues.
7. Effective cross-connection program developed and implemented.
8. Stable water source with no significant interruptions in supply.

(3) INFORMATION AVAILABILITY. Systems shall provide the department any existing information that will enable the department to conduct a sanitary survey.

(4) SURVEY DETAILS. A sanitary survey, as conducted by the department under this section, includes but is not limited to, an onsite review of the water sources facilities, equipment, operation, maintenance, and monitoring compliance of a public water system to evaluate the adequacy of the system, its sources and operations and the distribution of safe drinking water. In addition, the department shall identify sources of potential contamination by using results of source water vulnerability assessments or other relevant information.

(5) COMPONENTS OF A SURVEY. The sanitary survey shall include an evaluation of all or the applicable components listed in (a) to (h):

(a) Source.
(b) Treatment.
(c) Distribution system.
(d) Finished water storage.
(e) Pumps, pump facilities, and controls.
(f) Monitoring, reporting, and data verification.
(g) System management and operation.
(h) Operator compliance with department requirements.

NR 809.50 Maximum contaminant levels, compliance dates and best available technologies for radionuclides. The following are the maximum contaminant levels, compliance dates and best available technologies for radium-226, radium-228 and gross alpha particle radioactivity:

(1) MAXIMUM CONTAMINANT LEVELS FOR RADIONUCLIDES. The following are the maximum contaminant levels for radium-226, radium-228 and gross alpha particle radioactivity:

(a) *MCL for combined radium-226 and radium-228.* The maximum contaminant level for combined radium-226 and radium-228 is 5 pCi/l. The combined radium-226 and radium-228 value is determined by the addition of the results of the analysis for radium-226 and the analysis for radium-228.

(b) *MCL for gross alpha particle activity, excluding radon and uranium.* The maximum contaminant level for gross alpha particle activity, including radium-226 but excluding radon and uranium, is 15 pCi/l.

(c) *MCL for uranium.* The maximum contaminant level for uranium is 30 ug/l.

(2) COMPLIANCE DATES FOR COMBINED RADIUM-226 AND RADIUM-228, GROSS ALPHA PARTICLE ACTIVITY, GROSS BETA PARTICLE AND PHOTON RADIOACTIVITY AND URANIUM. Community water systems shall comply with the MCLs listed in sub. (1) and with s. NR 809.51 (1) beginning December 8, 2003 and compliance shall be determined in accordance with the requirements of ss. NR 809.50 and 809.51. Compliance with reporting requirements for the radionuclides under appendix A to subch. VII is required on and after December 8, 2003.

(3) BEST AVAILABLE TECHNOLOGIES (BATS) FOR RADIONUCLIDES. (a) The department identifies, as indicated in the following table, the best available technology for achieving compliance with the maximum contaminant levels for combined radium-226 and radium-228, uranium, gross alpha particle activity and beta particle and photo radioactivity. A community water system that must treat to reduce radionuclide levels below the MCLs specified in sub. (1) or s. NR 809.51 shall achieve compliance using one of the methods listed in Table J, Table K or Table L.

Table J
BAT for Combined Radium-226 and Radium-228, Uranium, Gross Alpha Particle Activity, and Beta Particle and Photon Radioactivity

Contaminant	**BAT**
1. Combined radium-226 and radium-228	Ion exchange, reverse osmosis, lime softening

2. Uranium	Ion exchange, reverse osmosis, lime softening, coagulation/ filtration
3. Gross alpha particle activity (excluding Radon and Uranium).	Reverse osmosis.
4. Beta particle and photon Ion exchange	Reverse osmosis. radioactivity

(4) SMALL WATER SYSTEMS COMPLIANCE TECHNOLOGIES FOR RADIONUCLIDES. (a) The department identifies, as indicated in the following table, the best available technology for achieving compliance with the maximum contaminant levels for combined radium-226 and radium-228, uranium, gross alpha particle activity and beta particle and photo radioactivity for small systems serving a population of 10,000 or less:

Table K
List of Small Water Systems Compliance Technologies for Radionuclides and Limitations To Use

Unit technologies	**Limitations (see footnotes)**	**Operator skill level required[1]**	**Raw water quality range and consideration[1]**
1. Ion exchange (IE).	(a)	Intermediate	All groundwaters.
2. Point of use (POU [2]) IE	(b)	Basic	All groundwaters
3. Reverse osmosis (RO)	(c)	Advanced	Surface waters usually require pre-filtration
4. POU [2] RO	(b)	Basic	Surface waters usually require pre-filtration.
5. Lime softening	(d)	Advanced	All waters.
6. Green sand filtration	(e)	Basic	
7. Co-precipitation with Barium sulfate	(f)	Intermediate to Advanced	Groundwaters with suitable water quality
8.Electrodialysis/electrodialysis reversal		Basic to Intermediate	All groundwaters.
9.Pre-formedhydrous Manganese oxide filtration.	(g)	Intermediate	All groundwaters
10. Activated alumina	(a), (h)	Advanced	All groundwaters; competing anion concentrations may affect regeneration frequency.
11.Enhanced coagulation/filtration	(i)	Advanced	Can treat a wide range of water qualities.

1 National Research Council (NRC). Safe Water from Every Tap: Improving Water Service to Small Communities. National Academy Press, Washington, D.C. 1997.
2 POU devices are typically installed at the kitchen tap. See the April 21, 2000 NODA for more details.
Limitations Footnotes: Technologies for Radionuclides:
a The regeneration solution contains high concentrations of the contaminant ions. Disposal options should be carefully considered before choosing this technology.
b When POU devices are used for compliance, programs for long-term operation, maintenance, and monitoring must be provided by water utility to ensure proper performance.

c Reject water disposal options should be carefully considered before choosing this technology. See other RO limitations described in the SWTR Compliance Technologies Table.
d The combination of variable source water quality and the complexity of the water chemistry involved may make this technology too complex for small surface water systems.
e Removal efficiencies can vary depending on water quality.
f This technology may be very limited in application to small water systems. Since the process requires static mixing, detention basins, and filtration, it is most applicable to systems with sufficiently high sulfate levels that already have a suitable filtration treatment train in place.
g This technology is most applicable to small water systems that already have filtration in place.
h Handling of chemicals required during regeneration and pH adjustment may be too difficult for small water systems without an adequately trained operator.
i Assumes modification to a coagulation/filtration process already in place.

Table L
Compliance Technologies by System Size Category for Radionuclide NPDWR's

Contaminant	**Compliance technologies [1] for system size categories (population served)**		
	25–500	501–3,300	3,300–10,000
1. Combined radium-226 and radium-228	1, 2, 3, 4, 5, 6, 7, 8, 9	1, 2, 3, 4, 5, 6, 7, 8, 9	1, 2, 3, 4, 5, 6, 7, 8, 9
2. Gross alpha particle activity	3, 4	3, 4	3, 4
3. Beta particle activity and photon activity	1, 2, 3, 4	1, 2, 3, 4	1, 2, 3, 4
4. Uranium	1, 2, 4, 10, 11	1, 2, 3, 4, 5, 10, 11	1, 2, 3, 4, 5, 10, 11

Note: 1 Numbers correspond to those technologies found listed in the Table K of s. NR 809.50(4).

(b) Point of Use (POU) treatment may only be allowed if the department determines that treatment prior to entry is not feasible.

(5) ALTERNATIVE TREATMENT. The department may approve the use of alternative treatment not listed in subs. (3) and (4), if a public water system owner or operator demonstrates to the department, using pilot studies or other means, that the alternative treatment is sufficient to achieve compliance with the MCLs in sub. (1).

NR 809.51 Beta particle and photon radioactivity from man-made radionuclides maximum contaminant levels. (1) ALLOWABLE DOSE. The average annual concentration of beta particle and photon radioactivity from man-made radionuclides in

drinking water shall not produce an annual dose equivalent to the total body or any internal organ greater than 4 millirem/year.

(2) MCL CALCULATION. Except for the radionuclides listed in Table M, the concentration of man–made radionuclides causing 4 mrem total body or organ dose equivalents shall be calculated on the basis of a 2 liter per day drinking water intake using the 168 hour data listed in "Maximum Permissible Body Burdens and Maximum Permissible Concentrations of Radionuclides in Air or Water for Occupational Exposure", NBS Handbook 69 as amended August, 1963, U.S. Department of Commerce. Copies of this document are available for inspection at the office of the department of natural resources, the secretary of state's office and the office of the revisor of statutes, and may be obtained for personal use from the Superintendent of Documents, U.S. Government Printing Office, Washington, D.C. 20402. If 2 or more radionuclides are present, the sum of their annual dose equivalent to the total body or to any organ may not exceed 4 millirem/year.

Table M
Average annual concentrations assumed to produce
a total body or organ dose of 4 mrem/yr.

Radionuclide	Critical Organ	pCi per liter
Tritium	Total body	20,000
Strontium-90	Bone marrow	8

Note: Sections ss. NR 809.50 to 809.52 are identical to the radioactivity standards of the department of health services in ch. DHS 157, Wis. Adm. Code, and to the National Interim Primary Drinking Water Regulations, 40 CFR 141. These sections are adopted pursuant to s. 254.34, Stats.

NR 809.52 Analytical methods for radionuclides. (1) ANALYTICAL METHODS. Analyses conducted to determine compliance with ss. NR 809.50 and 809.51 shall be made in accordance with approved methods listed in Table N or methods approved by the EPA under Appendix A to Subpart C of Part 141--Alternative Testing Methods Approved for Analyses Under the Safe Drinking Water Act and published in the Federal Register.

TABLE N
SDWA Approved Methodology for Radiological Measurements
Reference (method or page number)

Parameter	Method	EPA[1]	EPA[2]	EPA[3]	EPA[4]	SM[5]	ASTM[6]	USGS[7]	DOE[8]	Others
Naturally Occurring:								R-1120-76	---	
Gross alpha[11] &	Evaporation	900	p1	00-01	p1	302, 7110 B		R-1120-76	---	

beta										
Gross alpha[11]	co-precipitation	---		00-02		7110 C	---	---	---	
Radium 226	Radon emanation, Radiochemical	903.1 903.0	P 16 p13	Ra-04 Ra-03	p19	7500-Ra C 304,305, 7500-Ra B	D 3454-91 D 2460-90	R-1141-76 R-1140-76	Ra-05	N.Y.[9]
Radium 228	Radiochemical	904.0	P 24	Ra-05	p19	304,7500 Ra D	---	R-1142-76	---	N.Y.[9] N.J.[10]
Uranium[12]	Radiochemical	908.0				7500-UB 7500-UB-00	D2907-91	R-1180-76	U-04 U-2	
	Fluorometric	908.1				7500-UC (17th Ed)	D2907-97	R-1180-76 R-1181-76 R-1182-76	U-04	
	Alpha spectrometry	---		00-07	p33	7500-UC (18th or 19th Ed)	D3972-90	---	---	
	Laser Phosphorimetry	---				-	D5174-91			
	ICP-MS	200.8 13				3125	D5673-03			
Man-Made:										
Radioactive						303,7500-	---			
Strontium - 89,90	Radiochemical	905.0	p 29	Sr-04	p65	Sr B	---	R1160-76	Sr-01 Sr-02	
Tritium	Liquid Scintillation	906.0	p 34	H-02	p 87	306, 7500-		D 4107–	R 1171-	---

						3H B		91	76	
Radioactive Cesium -	Radiochemical, Gamma ray spectrophotometry	901.0 901.1	p 4		p 92	7500-Cs B 7120 (19th Ed.)	D 2459-72 D 3649-91	--- R-1110-76	4.5.2.3	
Radioactive Iodine	Radiochemical, Gamma ray spectrophotometry	902.0 901.1	P 6 p 9		p 92	7500-I B 7500-I C 7500-I D 7120 (19th Ed)	D 3649-91 D 4785-88	---	4.5.2.3	
Gamma Emitters	Gamma ray spectrometry	901.1 902.0 901.0			p 92	7120 (19th Ed.) 7500-Cs B 7500-I B	D 3649-91 D 4785-88	---	4.5.2.3	

[1]"Prescribed Procedures for Measurement of Radioactivity in Drinking Water", EPA-600/4-80/032. August, 1980. Available from the EMSL, Office of Research and Development, U.S. EPA, 26 W. Martin Luther King Drive, Cincinnati, Ohio, 45268.
[2]"Interim Radiochemical Methodology for Drinking Water", EPA 600/4-75/008 (revised), March 1976, Available at NTIS, ibid PB 253258.
[3]"Radiochemistry Procedures Manual", EPA 520/5-84/006, December 1987, Available at NTIS, ibid, PB 84-215581.
[4]"Radiochemical Analytical Procedures for Analysis of Environmental Samples", March 1979, Available at NTIS, ibid, EMSL LV 053917
[5]"Standard Methods for the Examination of Water and Wastewater", 13th Edition, 17th, 18th, 19th Editions, 1971, 1989, 1992, 1995, Available at APHA, 1015 Fifteenth Street, N.W. Washington, D.C. 20005. All methods are in the 17th, 18th and 19th editions except 7500-U C Flurometric Uranium was discontinued after the 17th Edition. 7120 Gamma Emitters is only in the 19th Edition and 302, 303, 304, 305 and 306 are only in the 13th Edition.
[6]Annual Book of ASTM Standards, Vol. 11.02, 1994. Available at American Society for Testing and Materials, 100 Barr Harbor Drive, West Conshohocken, PA 19428.
[7]"Methods for Determination of Radioactive Substances in Water and Fluvial Sediments", Chapter A5 in Book 5 of Techniques of Water Resources Investigations of the United States Geological Survey, 1997. Available at U.S. Geological Survey (USGS)

Information Services, Box 25286 Federal Center, Denver, CO 80225-0425.
[8]"EML Procedures Manual", 27th Edition, Volume 1, 1990. Available at the Environmental Measurements Laboratory, U.S. Department of Energy (DOE), 376 Hudson Street, New York, NY 10014-3621.
[9]"Determination of Ra-226 and Ra-228 (Ra-02)", January 1980, Revised June 1982. Available at Radiological Sciences Institute Center for Laboratories and Research, New York State Department of Health, Empire State Plaza, Albany, NY 12201.
[10]"Determination of Radium 228 in Drinking Water", August 1980. Available at State of New Jersey, Department of Environmental Protection, Division of Environmental Quality, Bureau of Radiation and Inorganic Analytical Services, 9 Ewing Street, Trenton, N.J. 08625.
[11]Natural uranium and thorium-230 or approved as gross alpha calibration standards for gross alpha with co-precipitation and evaporation methods, americium-241 is approved with co-precipitation methods.
[12]If uranium (U) is determined by mass a 0.67 pCi/g of uranium conversion factor must be used. This conservative factor is based on the 1:1 activity ratio of U-234 to U-238 that is characteristic of naturally occurring uranium.

(2) DETECTION LIMITS. To determine compliance with s. NR 809.50 (1), the detection limit may not exceed the concentrations in Table O.

Table O
Detection Limits for Gross Alpha Particle Activity, Radium 226, Radium 228, and Uranium

Contaminant	**Detection Limit**
Gross alpha particle activity	3 pCi/l
Radium 226	1 pCi/l
Radium 228	1 pCi/l
Uranium	Reserve

(3) RESULTS ROUNDING. To judge compliance with the maximum contaminant levels listed in s. NR 809.50, averages of data shall be used and shall be rounded to the same number of significant figures as the maximum contaminant level for the substance in question.

(4) SENSITIVITY LIMITS. For the purpose of monitoring radionuclide concentrations in drinking water, the required sensitivity of the radioanalysis is defined in terms of a detection limit. The detection limit shall be that concentration which can be counted with a precision of plus or minus 100% at the 95% confidence level, 1.96 σ where σ is the standard deviation of the net counting rate of the sample.

(5) DETECTION LIMITS FOR MAN-MADE BETA PARTICLE AND PHOTON EMITTERS. To determine compliance with s. NR 809.51, the detection limits may not exceed the concentrations listed in Table P.

Table P
Detection Limits for Man-made Beta Particle and Photon Emitters

Radionuclide	Detection Limit
Tritium	1,000 pCi/1
Strontium-89	10 pCi/1
Strontium-90	2 pCi/1
Iodine-131	1 pCi/1
Cesium-134	10 pCi/1
Gross beta	4 pCi/1
Other radionuclides	1/10 of the applicable limit

Note: Sections NR 809.50 to 809.52 are identical to the radioactivity standards of the department of health services in ch. DHS 157, Wis. Adm. Code, and to the National Interim Primary Drinking Water Regulations, 40 CFR 141. These sections are adopted pursuant to s. 254.34, Stats.

(6) SAMPLE COLLECTION METHODS. Sample collection for radionuclide contaminants under s. NR 809.50 shall be conducted using the sample preservation, containers and maximum holding time procedures specified in Table Q:

Table Q
Radionuclide sample preservation, containers and maximum holding time

Parameter	Preservative[1]	Container[2]	HoldingTime[3]
Gross Alpha	Conc. HCl or HNO_3 to pH <2	P or G	6 mo
Gross beta	Conc. HCl or HNO_3 to pH <2	P or G	6 mo
Strontium-89	Conc. HCl or HNO_3 to pH <2	P or G	6 mo
Strontium-90	Conc. HCl or HNO_3 to pH <2	P or G	6 mo
Radium-226	Conc. HCl or HNO_3 to pH <2	P or G	6 mo
Radium-228	Conc. HCl or HNO_3 to pH <2	P or G	6 mo
Cesium-134	Conc. HCl to pH <2	P or G	6 mo
Iodine-131	None	P or G	8 days
Tritium	None	G	6 mo
Uranium	Conc. HCl or HNO3 to pH <2	P or G	6 mo
Photon emitters	Conc. HCl or HNO3 to pH <2	P or G	6 mo

[1]It is recommended that the preservative be added to the sample at the time of collection unless suspended solids activity is to be measured. If the sample has to be shipped to a laboratory or storage area unpreserved, acidification of the sample (in its original

container) may be delayed for a period not to exceed 5 days. A minimum of 16 hours must elapse between acidification and analysis.
[2]P = Plastic, hard or soft; G = Glass, hard or soft.
[3]Holding time is defined as the period from time of sampling to time of analysis. In all cases, samples should be analyzed as soon after collection as possible. If a composite sample is prepared, a holding time cannot exceed 12 months.

NR 809.53 Radionuclide monitoring frequency and compliance requirements for community water systems. (1) MONITORING REQUIREMENTS FOR GROSS ALPHA PARTICLE ACTIVITY, RADIUM-226, RADIUM-228 AND URANIUM. (a) *Detection limits.* For the purposes of monitoring for gross alpha particle activity, radium-226, radium-228, uranium and beta particle and photon radioactivity in drinking water, "detection limit" is defined in s. NR 809.52 (4).

(b) *Applicability and sampling location.* Community water system applicability and sampling location requirements shall be as follows:

1. Applicability and sampling location for existing community water systems or sources. All existing community water systems shall sample at every entry point to the distribution system that is representative of all sources being used, hereafter called a sampling point, under normal operating conditions. The community water system shall take each sample at the same sampling point unless conditions make another sampling point more representative of each source or the department has designated a distribution system location, in accordance with par. (c) 2.c.

2. Applicability and sampling location for new community water systems or sources. All new community water systems or community water systems that use a new source of water shall begin to conduct initial monitoring for the new source within the first quarter after initiating use of the source. Community water systems shall conduct more frequent monitoring when ordered by the department in the event of possible contamination or when changes in the distribution system or treatment processes occur which may increase the concentration of radionuclides in finished water.

(c) *Initial monitoring.* Community water systems shall conduct initial monitoring for gross alpha particle activity, radium-226, radium-228 and uranium as follows:

1. Except as provided in subd. 2., a community water system shall collect 4 consecutive quarterly samples at all sampling points before December 31, 2007.

2. As an alternative to the requirement of subd. 1., a community water system may use historical monitoring data collected at a sampling point to satisfy the initial monitoring requirements for that sampling point for the following situations:

a. To satisfy initial monitoring requirements, a community water system having only one entry point to the distribution system may use the monitoring data from the last compliance monitoring period that began between June 1, 2000 and December 8, 2003.

b. To satisfy initial monitoring requirements, a community water system with multiple entry points and having appropriate historical monitoring data for each entry point to the distribution system may use the monitoring data from the last compliance monitoring period that began between June 1, 2000 and December 8, 2003.

c. To satisfy initial monitoring requirements, a community water system with appropriate historical data for a representative point in the distribution system may use

the monitoring data from the last compliance monitoring period that began between June 1, 2000 and December 8, 2003, provided that the department finds that the historical data satisfactorily demonstrate that each entry point to the distribution system is expected to be in compliance based upon the historical data and reasonable assumptions about the variability of contaminant levels between entry points. The department shall make a written finding indicating how the data conforms to these requirements.

3. For gross alpha particle activity, uranium, radium-226 and radium-228 monitoring, the department may waive the final 2 quarters of initial monitoring for a sampling point if the results of the samples from the previous 2 quarters are below the detection limit.

4. If the average of the initial monitoring results for a sampling point is above the MCL, the community water system shall collect and analyze quarterly samples at that sampling point until the community water system has results from 4 consecutive quarters that are at or below the MCL, unless the community water system enters into another schedule as part of a formal compliance agreement with the department.

(d) *Reduced monitoring.* Upon completion of initial monitoring the department may allow monitoring once every 3 years, once every 6 years, or once every 9 years, for each sampling point based on the following criteria:

1. If the average of the initial monitoring results for each contaminant, i.e., gross alpha particle activity, uranium, radium-226 or radium-228, is below the detection limit specified in s. NR 809.50 (3), Table J., the community water system shall collect and analyze for that contaminant using at least one sample at that sampling point every 9 years.

2. For gross alpha particle activity and uranium, if the average of the initial monitoring results for each contaminant is at or above the detection limit but at or below one-half the MCL, the community water system shall collect and analyze for that contaminant using at least one sample at that sampling point every 6 years. For combined radium-226 and radium-228, the analytical results shall be combined. If the average of the combined initial monitoring results for radium-226 and radium-228 is at or above the detection limit but at or below one-half the MCL, the community water system shall collect and analyze for that contaminant using at least one sample at that sampling point every 6 years.

3. For gross alpha particle activity and uranium, if the average of the initial monitoring results for each contaminant is above one-half the MCL but at or below the MCL, the community water system shall collect and analyze at least one sample at that sampling point every 3 years. For combined radium-226 and radium-228, the analytical results shall be combined. If the average of the combined initial monitoring results for radium-226 and radium-228 is above one-half the MCL, but at or below the MCL, the community water system shall collect and analyze at least one sample at that sampling point every 3 years.

4. Results of samples collected during a reduced monitoring period shall be used to determine the monitoring frequency for subsequent monitoring periods.

5. If a community water system has a monitoring result that exceeds the MCL while on reduced monitoring, the community water system shall collect and analyze quarterly samples at that sampling point until the community water system has results from 4 consecutive quarters that are below the MCL, unless the community water system enters into another schedule as part of a formal compliance agreement with the department.

(e) *Compositing.* To fulfill quarterly monitoring requirements for gross alpha particle activity, radium-226, radium-228 or uranium, a community water system may composite up to 4 consecutive quarterly samples from a single entry point if analysis is done within a year of the first sample. The department will treat analytical results from the composited results as the average analytical result to determine compliance with the MCLs and the future monitoring frequency. If the analytical result from the composited sample is greater than one-half the MCL, the department may direct the community water system to take additional quarterly samples before allowing the community water system to sample under a reduced monitoring schedule.

(f) *Gross alpha particle activity measurement substitutions.* A gross alpha particle activity measurement may be substituted for the required radium-226 measurement provided that the measured gross alpha particle activity does not exceed 5 pCi/l. A gross alpha particle activity measurement may be substituted for the required uranium measurement provided that the measured gross alpha particle activity does not exceed 15 pCi/l. The gross alpha measurement shall have a confidence interval of 95% confidence level, 1.65 σ where σ is the standard deviation of the net counting rate of the sample for radium-226 and uranium. When a community water system uses a gross alpha particle activity measurement in lieu of a measurement for radium-226 or uranium, or both, the gross alpha particle activity analytical result shall be used to determine the future monitoring frequency for radium-226 or uranium, or both. If the gross alpha particle activity result is less than detection, one-half the detection limit shall be used to determine compliance and the future monitoring frequency.

(2) MONITORING REQUIREMENTS FOR BETA PARTICLE AND PHOTON RADIOACTIVITY. To determine compliance with the maximum contaminant levels in s. NR 809.51 for beta particle and photon radioactivity, a community water system shall monitor at a frequency as follows:

(a) Community water systems designated by the department as vulnerable, shall sample for beta particle and photon radioactivity. Community water systems shall collect quarterly samples for beta emitters and annual samples for tritium and strontium-90 at each entry point to the distribution system, no later than one quarter after being notified by the department. Community water systems already designated by the department shall continue to sample until the department reviews and either reaffirms or removes the designation.

1. If the gross beta particle activity minus the naturally occurring potassium-40 beta particle activity at an entry point has a running annual average, computed quarterly, less than or equal to 50 pCi/l, the department may reduce the frequency of monitoring at that entry point to once every 3 years. Community water systems shall collect all samples required in this subsection during the reduced monitoring period.

2. For community water systems in the vicinity of a nuclear facility, the department may allow the community water system to utilize environmental surveillance data collected by the nuclear facility in lieu of monitoring at the community water system's entry points, if the department determines that the data is applicable to a particular community water system. If there is a release from a nuclear facility, community water systems which are using surveillance data shall begin monitoring at the community water system's entry points in accordance with this subsection.

3. At the discretion of the department, suppliers of water utilizing only groundwater may be required to monitor for manmade radioactivity.

(b) Community water systems designated by the department as utilizing waters contaminated by effluents from nuclear facilities shall sample for beta particle and photon radioactivity. Community water systems shall collect quarterly samples for beta emitters and iodine-131 and annual samples for tritium and strontium-90 at each entry point to the distribution system, hereafter called a sampling point, beginning no later than one quarter after being notified by the department. Community water systems already designated by the department as community water systems using water contaminated by effluents from nuclear facilities shall continue to sample until the department reviews and either reaffirms or removes the designation.

1. Quarterly monitoring for gross beta particle activity shall be based on the analysis of monthly samples or the analysis of a composite of 3 monthly samples.

Note: Quarterly monitoring for gross beta particle activity based on the analysis of monthly samples is recommended.

2. For iodine-131, a composite of 5 consecutive daily samples shall be analyzed once each quarter. As ordered by the department, more frequent monitoring shall be conducted when iodine-131 is identified in the finished water.

3. Annual monitoring for strontium-90 and tritium shall be conducted by means of the analysis of a composite of 4 consecutive quarterly samples or analysis of 4 quarterly samples.

Note: Annual monitoring for strontium-90 and tritium by means of the analysis of a composite of 4 consecutive quarterly samples is recommended.

4. If the gross beta particle activity minus the naturally occurring potassium-40 beta particle activity at a sampling point has a running annual average, computed quarterly, less than or equal to 15 pCi/l, the department may reduce the frequency of monitoring at that sampling point to once every 3 years. Community water systems shall collect all samples required in this paragraph during the reduced monitoring period.

5. For community water systems in the vicinity of a nuclear facility, the department may allow the community water system to utilize environmental surveillance data collected by the nuclear facility in lieu of monitoring at the community water system's entry points, if the department determines that the data is applicable to a particular community water system. If there is a release from a nuclear facility, community water systems which are using surveillance data shall begin monitoring at the community water system's entry points in accordance with this paragraph.

(c) Community water systems designated by the department to monitor for beta particle and photon radioactivity may not apply to the department for a waiver from the monitoring frequencies specified in either par. (a) or (b).

(d) Community water systems may analyze for naturally occurring potassium-40 beta particle activity from the same or equivalent sample used for the gross beta particle activity analysis. Community water systems may subtract the potassium-40 beta particle activity value from the total gross beta particle activity value to determine if 50 pCi/l is exceeded. The potassium-40 beta particle activity shall be calculated by multiplying elemental potassium concentrations, in mg/l, by a factor of 0.82.

(e) If the gross beta particle activity minus the naturally occurring potassium-40 beta particle activity exceeds 50 pCi/l, an analysis of the sample shall be performed to identify

the major radioactive constituents present in the sample and the appropriate doses shall be calculated and summed to determine compliance with s. NR 809.51 (1) using the formula in s. NR 809.51 (2). Doses shall also be calculated and combined for measured levels of tritium and strontium to determine compliance.

(f) Community water systems shall monitor monthly at the sampling points that exceed the maximum contaminant level in s. NR 809.51 beginning the month after the exceedance occurs. Community water systems shall continue monthly monitoring until the system has established, by a rolling average of 3 monthly samples, that the MCL is being met. Community water systems that establish that the MCL is being met shall return to quarterly monitoring until they meet the requirements in par. (a) 1. or (b) 4.

(3) GENERAL MONITORING AND COMPLIANCE REQUIREMENTS FOR RADIONUCLIDES. (a) The department may require more frequent monitoring than specified in subs. (1) and (2), or may require confirmation samples at its discretion. The results of the initial and confirmation samples shall be averaged for use in compliance determinations.

(b) Each public water system shall monitor at the time designated by the department during each compliance period.

(c) Compliance with ss. NR 809.50 (1) and 809.51 (1) shall be determined based on the analytical results obtained at each sampling point. If one sampling point is in violation of an MCL, the community water system is in violation of the MCL. In addition:

1. For community water systems monitoring more than once per year, compliance with the MCL is determined by using a running annual average calculated for each sampling point. If the average of any sampling point is greater than the MCL, the community water system is out of compliance with the MCL.

2. For community water systems monitoring more than once per year, if any sample result will cause the running annual average to exceed the MCL at any sample point, the community water system is out of compliance with the MCL immediately.

3. For community water systems on reduced monitoring where monitoring results exceed an MCL, and a water system is placed on quarterly monitoring as required by sub. (1)(d)5., compliance with the MCL is determined based on a running annual average at each sample point, as required by sub. (3)(c)1. if sample results exceed the MCL.

4. Community water systems shall include all samples taken and analyzed under this section in determining compliance, even if that number is greater than the minimum required.

5. If a community water system does not collect all required samples when compliance is based on a running annual average of quarterly samples, compliance shall be based on the running average of the samples collected.

6. If a sample result is less than the detection limit, zero will be used to calculate the annual average, unless a gross alpha particle activity is being used in lieu of radium-226 or uranium, or both. If the gross alpha particle activity result is less than detection, 1/2 the detection limit shall be used to calculate the annual average.

(d) The department may delete results of obvious sampling or analytic errors.

Subchapter II — Control of Lead and Copper

NR 809.54 General requirements for the control of Lead and Copper. (1) APPLICABILITY. (a) The requirements of this subchapter constitute the primary drinking water regulations for lead and copper. Unless otherwise indicated, each of the provisions of this subchapter applies to community water systems and non-transient, non-community water systems.

(2) SCOPE. These regulations establish a treatment technique that includes requirements for corrosion control treatment, source water treatment, lead service line replacement and public education. These requirements are triggered, in some cases, by lead and copper action levels measured in samples collected at consumers' taps.

(3) LEAD AND COPPER ACTION LEVELS. (a) The lead action level is exceeded if the concentration of lead in more than 10% of tap water samples collected during any monitoring period conducted in accordance with s. NR 809.547 is greater than 0.015 mg/L i.e., if the "90th percentile" lead level is greater than 0.015 mg/L.

(b) The copper action level is exceeded if the concentration of copper in more than 10% of tap water samples collected during any monitoring period conducted in accordance with s. NR 809.547 is greater than 1.3 mg/L, i.e., if the "90th percentile" copper level is greater than 1.3 mg/L.

(c) The 90th percentile lead and copper levels shall be computed as follows:

1. The results of all lead or copper samples taken during a monitoring period shall be placed in ascending order from the sample with the lowest concentration to the sample with the highest concentration. Each sampling result shall be assigned a number, ascending by single integers beginning with the number 1 for the sample with the lowest contaminant level. The number assigned to the sample with the highest contaminant level shall be equal to the total number of samples taken.

2. The number of samples taken during the monitoring period shall be multiplied by 0.9.

3 The contaminant concentration in the numbered sample yielded by the calculation in subd. 2. is the 90th percentile contaminant level.

4 For water systems serving fewer than 100 people that collect 5 samples per monitoring period, the 90th percentile is computed by taking the average of the highest and second highest concentrations.

5. For a public water system that has been allowed by the department to collect fewer than five samples in accordance with federal rule 40 CFR part 141.86(c), the sample result with the highest concentration is considered the 90th percentile value.

(4) CORROSION CONTROL TREATMENT REQUIREMENTS. (a) All water system owners or operators shall install and operate optimal corrosion control treatment as defined in s. NR 809.04.

(b) Any water system that complies with the applicable corrosion control treatment requirements specified by the department under ss. NR 809.542 and 809.543 shall be deemed in compliance with the treatment requirement contained in par. (a).

(5) SOURCE WATER TREATMENT REQUIREMENTS. Any system exceeding the lead or copper action level shall implement all applicable source water treatment requirements specified by the department under s. NR 809.544.

(6) LEAD SERVICE LINE REPLACEMENT REQUIREMENTS. Any system exceeding the lead action level after implementation of applicable corrosion control and source water treatment requirements shall complete the lead service line replacement requirements contained in s. NR 809.545.

(7) PUBLIC EDUCATION REQUIREMENTS. Any system exceeding the lead action level shall implement the public education requirements contained in s. NR 809.546. Any system exceeding the copper action level shall annually provide public education on the health effects of copper using language in Appendix B to subch. VII, and information on reducing exposure to copper in drinking water similar to s. NR 809.546.

NR 809.541 Monitoring and analytical requirements for Lead and Copper. **(1)** GENERAL. Tap water monitoring for lead and copper, monitoring for water quality parameters, and source water monitoring for lead and copper shall be completed in compliance with ss. NR 809.548 and 809.549. The analyses shall be conducted using methods as prescribed in s. NR 809.113 (1), Table A, or methods approved by the EPA under Appendix A to Subpart C of Part 141--Alternative Testing Methods Approved for Analyses Under the Safe Drinking Water Act and published in the Federal Register. Holding times and preservation for Lead and Copper shall be done in accordance with s. NR 809.113, Table B.

(2) USE OF PREVIOUSLY COLLECTED DATA. The department may allow the use of previously collected monitoring data for the purposes of monitoring if the data were collected and analyzed in accordance with the requirements of this subchapter.

(3) LABORATORY CERTIFICATION. Analyses for alkalinity, calcium, conductivity, orthophosphate, pH, silica, and temperature may be performed by any person acceptable to the department. Analyses under this section for lead and copper shall only be conducted by laboratories that have been certified by EPA or the department. To obtain certification to conduct analyses for lead and copper, laboratories shall meet all of the requirements in sub. (4)(a) to (c).

(4) LABORATORY EVALUATION SAMPLES. For certification under sub. (3) laboratories shall analyze performance evaluation samples, which include lead and copper, provided by or acceptable to EPA or the department at least once a year by each method for which the laboratory desires certification; and the following:

(a). Achieve quantitative acceptance limits as follows:

1. For lead: ±30 percent of the actual amount in the Performance Evaluation sample when the actual amount is greater than or equal to 0.005 mg/L. The Practical Quantitation Level, or PQL for lead is 0.005 mg/L.

2. For Copper: ±10 percent of the actual amount in the Performance Evaluation sample when the actual amount is greater than or equal to 0.050 mg/L. The Practical Quantitation Level, or PQL for copper is 0.050 mg/L.

(b) Achieve the method detection limit for lead of 0.001 mg/L according to the procedures in appendix B of part 136 of the Code of Federal Regulations. This need only be accomplished if the laboratory will be processing source water composite samples under s. NR 809.549(1)(a)4.

(c) Be currently certified by EPA or the department under ch. NR 149 to perform analyses to the specifications described in par. (a)(1).

(5) DATA REPORTING REQUIREMENTS. Laboratories shall report data as follows:

(a) All lead and copper levels measured between the PQL and MDL shall be either reported as measured or they can be reported as one-half the PQL specified for lead and copper in par. (a). All levels below the lead and copper MDLs shall be reported as zero.

(b) All copper levels measured between the PQL and the MDL must be either reported as measured or they can be reported as one-half the PQL at 0.025 mg/L. All levels below the copper MDL shall be reported as zero.

(6) TREATMENT REPORTING REQUIREMENTS. System owners or operators shall report to the department any information required by the treatment provisions of this subchapter and s. NR 809.55.

(7) RECORDKEEPING REQUIREMENTS. System owners or operators shall maintain records in accordance with s. NR 809.82.

(8) VIOLATION OF NATIONAL PRIMARY DRINKING WATER REGULATIONS. Failure to comply with the applicable requirements of ss. NR 809.113, 809.541 to 809.549, 809.80, and 809.82, including requirements established by the department pursuant to these provisions, shall constitute a violation of the primary drinking water regulations for lead or copper, or both.

(9) PREMISE OWNER NOTIFICATION OF LEAD AND COPPER RESULTS. System owners or operators shall provide owners or occupants of all premises used in the lead and copper monitoring program the analytical results of all samples collected at that site. If sample results at a sample location exceed 15 *u*g/L for lead and 1300 *u*g/L for copper, system owners or operators must inform premise owners or occupants of health effects and measures necessary to lower lead or copper levels.

NR 809.542 Applicability of corrosion control treatment steps for small, medium and large-size water systems. (1) CORROSION CONTROL TREATMENT REQUIREMENTS. System owners or operators shall complete the applicable corrosion control treatment requirements described in s. NR 809.543 by the deadlines established.

(a) The owner or operator of a large system shall complete the corrosion control treatment steps specified in sub. (4), unless the system is deemed to have optimized corrosion control under sub. (2) (b) or (c).

(b) The owner or operator of a small system and a medium-size system shall complete the corrosion control treatment steps specified in sub. (5), unless the system is deemed to have optimized corrosion control under sub. (2) (a), (b) or (c).

(2) DETERMINATION OF OPTIMUM CORROSION CONTROL. A system is deemed to have optimized corrosion control and is not required to complete the applicable corrosion control treatment steps identified in this section if the system satisfies one of the criteria specified in par. (a) to (c). Any system deemed to have optimized corrosion control under this subsection, and which has treatment in place, shall continue to operate and maintain optimal corrosion control treatment and meet any requirements that the department determines appropriate to ensure optimal corrosion control treatment is maintained.

(a) A small or medium-size water system is deemed to have optimized corrosion control if the system meets the lead and copper action levels during each of 2 consecutive 6-month monitoring periods conducted in accordance with s. NR 809.547.

(b) Any water system may be deemed by the department to have optimized corrosion control treatment if the system owner or operator demonstrates to the satisfaction of the

department that it has conducted activities equivalent to the corrosion control steps applicable to the system under this section. If the department makes this determination, it shall provide the system with written notice explaining the basis for its decision and shall specify the water quality control parameters representing optimal corrosion control in accordance with s. NR 809.543 (6). Water systems deemed to have optimized corrosion control under this paragraph shall operate in compliance with the department-designated optimal water quality control parameters in accordance with s. NR 809.543 (8) and continue to conduct lead and copper tap and water quality parameter sampling in accordance with ss. NR 809.547 (4) (c) and 809.548 (4), respectively. A system owner or operator shall provide the department with all of the following information in order to support a determination under this subsection:

1. The results of all test samples collected for each of the water quality parameters in s. NR 809.543 (3) (c).

2. A report explaining the test methods used by the water system owner or operator to evaluate the corrosion control treatments listed in s. NR 809.543 (3) (a), the results of all tests conducted, and the basis for the system owner or operator's selection of optimal corrosion control treatment.

3. A report explaining how corrosion control has been installed and how it is being maintained to insure minimal lead and copper concentrations at consumers' taps.

4. The results of tap water samples collected in accordance with s. NR 809.547 at least once every 6 months for one year after corrosion control has been installed.

(c) Any water system is deemed to have optimized corrosion control if it submits results of tap water monitoring conducted in accordance with s. NR 809.547 and source water monitoring conducted in accordance with s. NR 809.549 that demonstrates for 2 consecutive 6-month monitoring periods that the difference between the 90th percentile tap water lead level computed under s. NR 809.541 (3) (c), and the highest source water lead concentration, is less than the practical quantitation level for lead specified in 40 CFR 141.89(a)(1)(ii).

1. The department may deem that systems whose highest source water lead level is below method detection limit have optimized corrosion control under this subsection if the 90th percentile tap water lead level is less than or equal to the practical quantitation level for 2 consecutive 6-month monitoring periods.

2. Any water system deemed to have optimized corrosion control in accordance with this subsection shall continue monitoring for lead and copper at the tap no less frequently than once every 3 calendar years using the reduced number of sites specified in s. NR 809.547 (3) and collecting the samples at times and locations specified in s. NR 809.547 (4) (d) 4. Any system that has not conducted a round of monitoring pursuant to s. NR 809.547 (4) (d) since September 30, 1997, shall complete a round of monitoring pursuant to this subsection as specified by the department.

3. Any water system deemed to have optimized corrosion control pursuant to this paragraph shall notify the department in writing pursuant to s. NR 809.55(1)(c)3 of any upcoming long-term change in treatment or addition of a new source as described in that section. The department must review and approve the addition of a new source or long-term change in water treatment before it is implemented by the water system. The department may require any system to conduct additional monitoring or to take other

action the department deems appropriate to ensure that systems maintain minimal levels of corrosion in the distribution system.

4. As of December 1, 2002, a system is not deemed to have optimized corrosion control under this subsection, and shall implement corrosion control treatment pursuant to subd. 5. unless it meets the copper action level.

5. Any system triggered into corrosion control because it is no longer deemed to have optimized corrosion control under this subsection shall implement corrosion control treatment in accordance with the deadlines in sub. (5). Any large system shall adhere to the schedule specified in that paragraph for medium-size systems, with the time periods for completing each step being triggered by the date the system is no longer deemed to have optimized corrosion control under this subsection.

(3) CRITERIA FOR COMPLETING CORROSION CONTROL TREATMENT STUDIES FOR SMALL AND MEDIUM-SIZE SYSTEMS. Any small or medium-size water system owner or operator that is required to complete the corrosion control steps due to the exceedance of the lead or copper action level may cease completing the treatment steps whenever the system meets both action levels during each of 2 consecutive monitoring periods conducted pursuant to s. NR 809.547 and the results are submitted to the department. If any such water system thereafter exceeds the lead or copper action level during any monitoring period, the system owner or operator shall recommence completion of the applicable treatment steps, beginning with the first treatment step which was not previously completed in its entirety. The department may require a system owner or operator to repeat treatment steps previously completed by the system owner or operator if the department determines that this is necessary to properly implement the treatment requirements. The department shall notify the system owner or operator in writing of such a determination and explain the basis for its decision. A small or medium-size water system shall implement corrosion control treatment steps in accordance with sub. (5), including a system deemed to have optimized corrosion control under sub. (2) (a), whenever it exceeds the lead or copper action level.

(4) TREATMENT STEPS AND DEADLINES FOR LARGE SYSTEMS. Except as provided in sub. (2) (b) and (c), owners or operators of large systems shall complete the following corrosion control treatment steps by the indicated dates:

(a) Step 1: The system owner or operator shall conduct initial monitoring during 2 consecutive 6-month monitoring periods by January 1, 1993.

(b) Step 2: The system owner or operator shall complete corrosion control studies and submit option for optimal corrosion control treatment to the department by July 1, 1994.

(c) Step 3: The department shall approve optimal corrosion control treatment by January 1, 1995.

(d) Step 4: The system owner or operator shall install optimal corrosion control treatment by January 1, 1997.

(e) Step 5: The system owner or operator shall complete follow-up sampling by January 1, 1998.

(f) Step 6: The department shall review installation of treatment and approve optimal water quality control parameters by July 1, 1998.

(g) Step 7: The system owner or operator shall operate in compliance with the department-approved optimal water quality control parameters and continue to conduct tap sampling.

(5) TREATMENT STEPS AND DEADLINES FOR SMALL AND MEDIUM-SIZE SYSTEMS. Except as provided in sub. (2), owners or operators of small and medium-size systems shall complete the following corrosion control treatment steps by the indicated time periods:
(a) Step 1: The system owner or operator shall conduct initial tap sampling until the system either exceeds the lead or copper action level or becomes eligible for reduced monitoring under s. NR 809.547 (4) (d). A system exceeding the lead or copper action level shall recommend optimal corrosion control treatment, under s. NR 809.543(1), within six months after the end of the monitoring period during which it exceeds one of the action levels.
(b) Step 2: Within 12 months after the end of the monitoring period during which a system exceeds the lead or copper action level, the department may require the system to perform corrosion control studies, under s. 809.54(2). If the department does not require the system to perform such studies, the department shall specify optimal corrosion control treatment, under s. 809.543(4) within the following timeframes:

1 For medium-size systems, within 18 months after the end of the monitoring period during which such system exceeds the lead or copper action level.

2. For small systems, within 24 months after the end of the monitoring period during which such system exceeds the lead or copper action level.

(c) Step 3: If the department requires a system owner or operator to perform corrosion control studies under step 2, the system owner or operator shall complete the studies within 18 months after the department requires the studies be conducted.

(d) Step 4: If the system owner or operator has performed corrosion control studies under step 2, the department shall review and determine adequacy of system's optimal corrosion control treatment within 6 months after completion of step 3.

(e) Step 5: The system owner or operator shall install optimal corrosion control treatment within 24 months after the department approves the treatment.

(f) Step 6: The system owner or operator shall complete follow-up sampling within 36 months after the department approves optimal corrosion control treatment.

(g) Step 7: The department shall review the system's installation of treatment and approve optimal water quality control parameters within 6 months after completion of step 6.

(h) Step 8: The system owner or operator shall operate in compliance with the department-approved optimal water quality control parameters and continue to conduct tap sampling.

NR 809.543 Description of corrosion control treatment requirements. Each system owner or operator shall complete the following corrosion control treatment requirements which are applicable to their system under s. NR 809.542.

(1) SYSTEM OWNER OR OPERATOR RECOMMENDATION REGARDING CORROSION CONTROL TREATMENT. Based upon the results of lead and copper tap monitoring and water quality parameter monitoring, owners or operators of small and medium-size water systems exceeding the lead or copper action level shall recommend installation of one or more of the corrosion control treatments listed in sub. (3) (a) which the system owner or operator believes constitutes optimal corrosion control for that system. The department may require the system owner or operator to conduct additional water quality parameter

monitoring in accordance with s. NR 809.548 (2) to assist the department in reviewing the system owner or operator's recommendation. In no case may the time period for installation of optimal corrosion control treatment on a small or medium-size system exceed the schedule as listed in s. NR 809.542 (5) (a) to (h).

(2) DEPARTMENT DECISION TO REQUIRE STUDIES OF CORROSION CONTROL TREATMENT BY SMALL AND MEDIUM-SIZE SYSTEMS. The department may require the owner or operator of any small or medium-size system that exceeds the lead or copper action level to perform corrosion control studies under sub. (3) to identify optimal corrosion control treatment for the system.

(3) PERFORMANCE OF CORROSION CONTROL STUDIES. (a) Any public water system owner or operator performing corrosion control studies shall evaluate the effectiveness of each of the following treatments, and, if appropriate, combinations of the following treatments to identify the optimal corrosion control treatment for that system:

1. Alkalinity and pH adjustment.
2. Calcium hardness adjustment.
3. The addition of a phosphate or silicate based corrosion inhibitor at a concentration sufficient to maintain an effective residual concentration in all test tap samples.

(b) The water system owner or operator shall evaluate each of the corrosion control treatments listed in par. (a) using either pipe rig or loop tests, metal coupon tests, partial-system tests, or analyses based on documented analogous treatments with other systems of similar size, water chemistry and distribution system configuration.

(c) The water system owner or operator shall measure all of the following water quality parameters in any tests conducted before and after evaluating the corrosion control treatments listed in par. (a):

1. Lead.
2. Copper.
3. pH.
4. Alkalinity.
5. Calcium.
6. Conductivity.
7. Orthophosphate (when an inhibitor containing a phosphate compound is used).
8. Silicate when an inhibitor containing a silicate compound is used.
9. Water temperature.

(d) The water system owner or operator shall identify all chemical or physical constraints that limit or prohibit the use of a particular corrosion control treatment and document such constraints with at least one of the following:

1. Data and documentation showing that a particular corrosion control treatment has adversely affected other water treatment processes when used by another water system with comparable water quality characteristics.
2. Data and documentation demonstrating that the water system owner or operator has previously attempted to evaluate a particular corrosion control treatment and has found that the treatment is ineffective or adversely affects other water quality treatment processes, or both.

(e) The water system owner or operator shall evaluate the effect of the chemicals used for corrosion control treatment on other water quality treatment processes.

(f) On the basis of an analysis of the data generated during each evaluation, the water system owner or operator shall recommend to the department in writing the treatment option that the corrosion control studies indicate constitutes optimal corrosion control treatment for that system. The water system owner or operator shall provide a rationale for its recommendation along with all supporting documentation specified in pars. (a) to (e).

(4) DEPARTMENT EVALUATION OF OPTIMAL CORROSION CONTROL TREATMENT. (a) Based upon consideration of available information including, where applicable, studies performed under sub. (3) and a system owner or operator's recommended treatment alternative, the department shall either approve the corrosion control treatment option recommended by the system owner or operator, or designate alternative corrosion control treatments from among those listed in sub. (3) (a). When approving optimal treatment, the department shall consider the effects that additional corrosion control treatment will have on water quality parameters and on other water quality treatment processes.

(b) The department shall notify the system owner or operator of its decision on optimal corrosion control treatment in writing and explain the basis for this determination. If the department requests additional information to aid its review, the water system owner or operator shall provide the information.

(5) INSTALLATION OF OPTIMAL CORROSION CONTROL. Each system owner or operator shall properly install and operate throughout its distribution system the optimal corrosion control treatment approved by the department under sub. (4).

(6) DEPARTMENT REVIEW OF TREATMENT. The department shall evaluate the results of all lead and copper tap samples and water quality parameter samples submitted by the water system owner or operator and determine whether the system owner or operator has properly installed and operated the optimal corrosion control treatment approved by the department in sub. (4). Upon reviewing the results of tap water and water quality parameter monitoring by the system owner or operator, both before and after the system owner or operator installs optimal corrosion control treatment, the department shall establish ranges for water quality parameters.

(7) APPROVAL OF OPTIMAL WATER QUALITY CONTROL PARAMETERS. The department shall review system owner or operator recommendations and select the values for the applicable water quality control parameters listed in sub. (3) which reflect optimal corrosion control treatment for the system. The department may specify values for additional water quality control parameters to reflect optimal corrosion control for the system. The department shall notify the water system owner in writing of these determinations and explain the basis for its decision. At a minimum, the department shall establish all of the following:

(a) A minimum value or a range of values for pH measured at each entry point to the distribution system.

(b) A minimum pH value, measured in all tap samples. The value shall be equal to or greater than 7.0, unless the water system owner provides information to indicate that meeting a pH level of 7.0 is not technologically feasible or is not necessary for the system to optimize corrosion control.

(c) If a corrosion inhibitor is used, a minimum concentration or a range of concentrations for the inhibitor, measured at each entry point to the distribution system

and in all tap samples, that the department determines is necessary to protect the interior walls of the pipes of the distribution system from corrosion.

(d) If alkalinity is adjusted as part of optimal corrosion control treatment, a minimum concentration or a range of concentrations for alkalinity, measured at each entry point to the distribution system and in all tap samples.

(e) If calcium carbonate stabilization is used as part of corrosion control, a minimum concentration or a range of concentrations for calcium, measured in all tap samples.

(8) CONTINUED OPERATION AND MONITORING. All system owners or operators optimizing corrosion control shall continue to operate and maintain optimal corrosion control treatment, including maintaining water quality parameters at or above minimum values or within ranges designated by the department under sub. (7), in accordance with this subsection for all samples collected under s. NR 809.548 (4) to (6). Compliance with the requirements of this subsection shall be determined every 6 months, as specified under s. NR 809.548 (4). A water system is out of compliance with the requirements of this subsection for a 6-month period if it has excursions for any department-specified parameter on more than 9 days during the period. An excursion occurs whenever the daily value for one or more of the water quality parameters measured at a sampling location is below the minimum value or outside the range designated by the department. The department may delete results of obvious sampling errors from this calculation. Daily values are calculated as follows:

(a) On days when more than one measurement for the water quality parameter is collected at the sampling location, the daily value shall be the average of all results collected during the day regardless of whether they are collected through continuous monitoring, grab sampling or a combination of both. If EPA has approved an alternative formula under 40 CFR 142.16 in the department's application for a program revision submitted pursuant to 40 CFR 142.12, the department's formula shall be used to aggregate multiple measurements taken at a sampling point for the water quality parameter in lieu of the formula in this paragraph.

(b) On days when only one measurement for the water quality parameter is collected at the sampling location, the daily value shall be the result of that measurement.

(c) On days when no measurement is collected for the water quality parameter at the sampling location, the daily value shall be the daily value calculated on the most recent day on which the water quality parameter was measured at the sample site.

(9) MODIFICATION OF DEPARTMENT TREATMENT DECISIONS. Upon its own initiative or in response to a request by a water system owner or operator or other interested party, the department may modify its determination of the optimal corrosion control treatment under sub. (4) or optimal water quality control parameters under sub. (6). A request for modification by a system owner or operator or other interested party shall be in writing, explain why the modification is appropriate, and provide supporting documentation. The department may modify its determination if it concludes that a change is necessary to ensure that the system owner or operator continues to optimize corrosion control treatment. A revised determination shall be made in writing, set forth the new treatment requirements, explain the basis for the department's decision, and provide an implementation schedule for completing the treatment modifications.

(10) TREATMENT DECISIONS BY EPA IN LIEU OF THE DEPARTMENT. The EPA regional administrator may review treatment determinations made by the department under sub.

(4), (6) or (8) and issue federal treatment determinations consistent with the requirements of those subsections if the regional administrator finds any of the following:

(a) The department has failed to issue a treatment determination by the applicable deadlines contained in s. NR 809.542.

(b) The department has abused its discretion in a substantial number of cases or in cases affecting a substantial population.

(c) The technical aspects of the department's determination would be indefensible in an expected federal enforcement action taken against a system owner or operator.

NR 809.544 Source water treatment requirements for corrosion control. (1) DEADLINES FOR COMPLETING SOURCE WATER TREATMENT STEPS. System owners or operators shall complete the applicable source water monitoring and treatment requirements by the following deadlines:

(a) Step 1: A system exceeding the lead or copper action level shall complete lead and copper source water monitoring under s. NR 809.549(2) and make a treatment recommendation to the Department under s. NR 809.544(2)(a) no later than 180 days after the end of the monitoring period during which the lead or copper action level was exceeded.

(b) Step 2: The department shall make a determination regarding proposed source water treatment within 6 months after receipt of proposed treatment alternatives under step 1.

(c) Step 3: If the department approves installation of source water treatment, the system owner or operator shall install the treatment within 24 months after completion of step 2.

(d) Step 4: The system owner or operator shall complete follow-up tap water monitoring and source water monitoring within 36 months after completion of step 2.

(e) Step 5: The department shall review the system's installation and operation of source water treatment and specify maximum permissible source water levels within 6 months after completion of step 4.

(f) Step 6: The system owner or operator shall operate in compliance with the department-specified maximum permissible lead and copper source water levels and continue source water monitoring.

(2) DESCRIPTION OF SOURCE WATER TREATMENT REQUIREMENTS. (a) *System treatment recommendation.* Any owner or operator of a system that exceeds the lead or copper action level shall recommend in writing to the department the installation and operation of one of the source water treatments listed in par. (b). A system owner or operator may recommend that no treatment be installed based upon a demonstration that source water treatment is not necessary to minimize lead and copper levels at users' taps.

(b) *Department determination regarding source water treatment.* The water system owner or operator shall complete an evaluation of the results of all source water samples collected by the water system owner or operator to determine whether source water treatment is necessary to minimize lead or copper levels and the evaluation shall be submitted to the department. If the department determines that treatment is needed, the department shall either approve installation and operation of the source water treatment recommended by the system owner or operator, if any, or require the installation and operation of another source water treatment from among the following: ion exchange,

reverse osmosis, lime softening or coagulation-filtration. If the department requests additional information to aid in its review, the water system owner or operator shall provide the information by the date specified by the department in its request. The department shall notify the system owner or operator in writing of its determination and set forth the basis for its decision.

(c) *Installation of source water treatment.* Each system owner or operator shall properly install and operate the source water treatment approved by the department under par. (b).

(d) *Department review of source water treatment and specification of maximum permissible source water levels.* The department shall review the source water samples taken by the water system owner or operator both before and after the system owner or operator installs source water treatment, and determine whether the system owner or operator has properly installed and operated the source water treatment approved by the department. Based upon its review, the department shall establish the maximum permissible lead and copper concentrations for finished water entering the distribution system. Levels shall reflect the contaminant removal capability of the treatment properly operated and maintained. The department shall notify the system owner or operator in writing and explain the basis for its decision.

(e) *Continued operation and maintenance.* Each water system owner or operator shall maintain lead and copper levels below the maximum permissible concentrations established by the department at each sampling point monitored in accordance with s. NR 809.549. The system is out of compliance with this paragraph if the level of lead or copper at any sampling point is greater than the maximum permissible concentration approved by the department.

(f) *Modification of department treatment decisions.* Upon its own initiative or in response to a request by a water system owner or operator or other interested party, the department may modify its determination of the source water treatment under par. (b), or maximum permissible lead and copper concentrations for finished water entering the distribution system under par. (d). A request for modification by a system owner or operator or other interested party shall be in writing, explain why the modification is appropriate, and provide supporting documentation. The department may modify its determination where it concludes that such change is necessary to ensure that the system owner or operator continues to minimize lead and copper concentrations in source water. A revised determination shall be made in writing, set forth the new treatment requirements, explain the basis for the department's decision, and provide an implementation schedule for completing the treatment modifications.

(g) *Treatment decisions by EPA in lieu of the department.* The EPA regional administrator may review treatment determinations made by the department under par. (b), (d) or (f) and issue federal treatment determinations consistent with the requirements of those paragraphs if the administrator finds any of the following:

1. The department has failed to issue a treatment determination by the applicable deadlines contained in sub. (1).

2. The department has abused its discretion in a substantial number of cases or in cases affecting a substantial population.

3. The technical aspects of the department's determination would be indefensible in an expected federal enforcement action taken against a system owner or operator.

NR 809.545 Lead service line replacement requirements. (1) GENERAL. System owners or operators with water systems that fail to meet the lead action level in tap samples taken pursuant to s. NR 809.547 (4) (b), after installing corrosion control or source water treatment, or both, whichever sampling occurs later, shall replace lead service lines in accordance with the requirements of this section. If a system is in violation of ss. NR 809.542 or 809.544 for failure to install source water or corrosion control treatment, the department may require the system owner or operator to commence lead service line replacement under this section after the date by which the system owner or operator was required to conduct monitoring under s. NR 809.547 (4) (b) has passed.

(2)RATE AND SCHEDULE FOR SERVICE LINE REPLACEMENT. (a) A system owner or operator shall replace annually at least 7% of the initial number of lead service lines in its distribution system. The initial number of lead service lines is the number of lead lines in place at the time the replacement program begins. The system owner or operator shall identify the initial number of lead service lines in its distribution system, including an identification of the portions owned by the system, based on a materials evaluation, including the evaluation required under s. NR 809.547 (1) and relevant legal authorities, such as contracts and local ordinances regarding the portion owned by the system. The first year of lead service line replacement shall begin on the first day following the end of the monitoring period in which the action level was exceeded under par. (1). If monitoring is required annually or less frequently, the end of the monitoring period is September 30 of the calendar year in which the sampling occurs unless the department has established an alternate monitoring period.

(b) Any water system resuming a lead service line replacement program, after the cessation of its lead service line replacement program, as allowed by par. (6), shall update its inventory of lead service lines to include those sites that were previously determined not to require replacement through the sampling provision under par. (3). The system shall then divide the updated number of remaining lead service lines by the number of remaining years in the program to determine the number of lines that must be replaced per year. Seven percent lead service line replacement is based on a 15-year replacement program, so, for example, systems resuming lead service line replacement after previously conducting two years of replacement would divide the updated inventory by 13. For those systems that have completed a 15-year lead service line replacement program, the department will determine a schedule for replacing or retesting lines that were previously tested out under the replacement program when the system exceeds the action level again after completing a 15-year replacement program.

(3) INDIVIDUAL SERVICE LINE CONSIDERATIONS. A system owner or operator is not required to replace an individual lead service line if the lead concentration in all service line samples from that line, taken pursuant to s. NR 809.547 (2) (c), is less than or equal to 0.015 mg/L.

(4) EXTENT OF SERVICE LINE REPLACEMENT. A water system owner or operator shall replace the entire service line, up to the building inlet, unless the water supply owner demonstrates to the satisfaction of the department under sub. (5), that the water system controls less than the entire service line. In such cases, the water system owner or operator shall replace the portion of the line which the department determines is under the water system owner or operator's control. The water system owner or operator shall notify the user served by the line that the water system owner or operator will replace the

portion of the service line under the water system's control and the owner operator shall offer to replace the building owner's portion of the line, but is not required to bear the cost of replacing the building owner's portion of the line. A system owner or operator is not required to bear the cost of replacing the privately-owned portion of the line, nor is the owner or operator required to replace the privately-owned portion where the building owner chooses not to pay the cost of replacing the privately-owned portion of the line, or where replacing the privately-owned system would be precluded by department, local or common law. An owner or operator of a water system that does not replace the entire length of the service line shall also complete all of the following tasks:

(a) At least 45 days prior to commencing with the partial replacement of a lead service line, the water system owner or operator shall provide notice to the residents of all buildings served by the line explaining that they may experience a temporary increase of lead levels in their drinking water, and shall provide guidance on measures consumers can take to minimize their exposure to lead. The department may allow the water system owner or operator to provide notice under this paragraph less than 45 days prior to commencing partial lead service line replacement if the replacement is in conjunction with emergency repairs. In addition, the water system owner or operator shall inform the residents served by the line that the system will, at the system's expense, collect a sample from each partially-replaced lead service line that is representative of the water in the service line for analysis of lead content, as prescribed under s. NR 809.547 (2) (c), no later than 72 hours after the completion of the partial replacement of the service line. The water system owner or operator shall collect the sample and report the results of the analysis to the building owner and each resident served by the line no later than 3 business days after receiving the results. Mailed notices post-marked no later than 3 business days after receiving the results shall be considered timely.

(b) The water system owner or operator shall provide the information required by par. (a) to the residents of individual dwellings by mail or by other methods approved by the department. In instances where multi-family dwellings are served by the line, the water system owner or operator may post the information at a conspicuous location likely to give notice to all residents of the multi-family dwellings.

(5) ACCELERATED SCHEDULE FOR SERVICE LINE REPLACEMENT. The department shall require a system owner or operator to replace lead service lines on a shorter schedule than that required by this section, taking into account the number of lead service lines in the system, if a shorter replacement schedule is feasible. The department shall make this determination in writing and notify the system owner or operator of its finding no later than 6 months after the system owner or operator is required to begin service line replacement based on monitoring under sub. (1).

(6) CEASING AND RECOMMENCING SERVICE LINE REPLACEMENT. Any system owner or operator may cease replacing lead service lines when lead service line samples collected pursuant to s. NR 809.547 (2) (b) meet the lead action level during each of 2 consecutive monitoring periods and the system owner or operator submits the results to the department. If the lead service line samples in any such water system thereafter exceed the lead action level, the system owner or operator shall recommence replacing lead service lines, pursuant to sub. (2).

(7) COMPLIANCE REPORTING. To demonstrate compliance with subs. (1) to (4), a system owner or operator shall report to the department the information specified in s. NR 809.55 (5).

NR 809.546 Public education and supplemental monitoring requirements. All water systems shall deliver a consumer notice of lead tap water monitoring results to persons served by the water system at sites that are tested, as specified in sub. (5). A water system that exceeds the lead action level based on tap water samples collected in accordance with s. NR 809.547 shall deliver the public education materials contained in sub. (1) in accordance with the requirements in sub. (2). Water systems that exceed the lead action level shall sample the tap water of any customer who requests it in accordance with sub. (3).

(1) CONTENT OF WRITTEN PUBLIC EDUCATION MATERIALS FOR LEAD AND COPPER CONTROL. (a) Content for community water systems and non-transient noncommunity water systems. Water systems shall include the following elements in printed materials, for example, brochures and pamphlets, in the same order as listed below. In addition, the language in subd. 1, 2, and 6 shall be included in the materials, exactly as written, except for the text in brackets in those subdivisions for which the water system shall include system-specific information. Any additional information presented by a water system shall be consistent with the information below and be in plain language that can be understood by the general public. Water systems shall submit all written public education materials to the department prior to delivery. The department may require the system to modify the language before the department approves of the content of written public materials prior to delivery.

1. IMPORTANT INFORMATION ABOUT LEAD IN YOUR DRINKING WATER. [INSERT NAME OF WATER SYSTEM] found elevated levels of lead in drinking water in some homes or buildings. Lead can cause serious health problems, especially for pregnant women and young children. Please read this information closely to see what you can do to reduce lead in your drinking water.

2. Health effects of lead. Lead can cause serious health problems if too much enters your body from drinking water or other sources. It can cause damage to the brain and kidneys, and can interfere with the production of red blood cells that carry oxygen to all parts of your body. The greatest risk of lead exposure is to infants, young children, and pregnant women. Scientists have linked the effects of lead on the brain with lowered IQ in children. Adults with kidney problems and high blood pressure can be affected, more than healthy adults at lower levels of lead. Lead is stored in the bones, and it can be released later in life. During pregnancy, the child receives lead from the mother's bones while in utero, which may affect the child's brain development.

3. Sources of Lead.

a. Explain what lead is.

b. Explain possible sources of lead in drinking water and how lead enters drinking water. Include information on home and building plumbing materials and service lines that may contain lead.

c. Discuss other important sources of lead exposure in addition to drinking water, for example, paint.

4. Reducing lead exposure. Discuss the steps the consumer can take to reduce their exposure to lead in drinking water.

a. Encourage running the water to flush out the lead.

b. Explain concerns with using hot water from the tap and specifically caution against the use of hot water for preparing baby formula.

c. Explain that boiling water does not reduce lead levels.

d. Discuss other options consumers can take to reduce exposure to lead in drinking water, such as alternative sources or treatment of water.

e. Suggest that parents have their child's blood tested for lead.

5. Reasons for elevated lead levels and water system response. Explain why there are elevated levels of lead in the system's drinking water, if known, and what the water system is doing to reduce the lead levels in homes and buildings in this area.

6. For more information, call us at [INSERT YOUR NUMBER] [(IF APPLICABLE), or visit our Web site at [INSERT YOUR WEB SITE HERE]]. For more information on reducing lead exposure around your home or building and the health effects of lead, visit EPA's Web site at http://www.epa.gov/lead or contact your health care provider.

(b) Additional content for community water systems. In addition to including the elements specified in par. (a), community water systems shall:

1. Tell consumers how to get their water tested.

2. Discuss lead in plumbing components and the difference between low lead and lead free.

(2) DELIVERY OF PUBLIC EDUCATION MATERIALS. (a) For public water systems serving a large proportion of non-English speaking consumers, as determined by the department, the public education materials shall contain information in the appropriate language or languages regarding the importance of the notice or shall contain a telephone number or address where persons served may contact the water system to obtain a translated copy of the public education materials or to request assistance in the appropriate language.

(b) Community water system public education tasks. A community water system that exceeds the lead action level on the basis of tap water samples collected in accordance with s. NR 809.547 and that is not already conducting public education tasks under this section, shall conduct all of the following public education tasks no later than 60 days after the end of the monitoring period in which the exceedance occurred:

1. Deliver printed materials meeting the content requirements of par. (a) to all bill-paying customers.

2. Contact customers who are most at risk by:

a. Delivering education materials that meet the content requirements of sub. (1) to local public health agencies even if they are not located within the water system's service area, along with an informational notice that encourages distribution to all the organization's potentially affected customers or community water system's users. The water system shall contact the local public health agencies directly by phone or in person. The local public health agencies may provide a specific list of additional community based organizations serving target populations, which may include organizations outside the service area of the water system. If such lists are provided, systems shall deliver education materials that meet the content requirements of sub. (1), along with an informational notice that encourages distribution to all the organization's potentially

affected customers or community water system's users to all organizations on the provided lists.

b. Delivering materials that meet the content requirements of sub. (1) to organizations that are located within the water system's service area such as public and private schools or school boards, Women, Infants and Children (WIC) and Head Start programs, public and private hospitals and medical clinics, pediatricians, family planning clinics, and local welfare agencies

c. Making a good faith effort to locate licensed childcare centers, public and private preschools, obstetricians-gynecologists and midwives within the service area and deliver materials that meet the content requirements of par. (a) to them, along with an informational notice that encourages distribution to all potentially affected customers or users. The good faith effort to contact at-risk customers may include requesting a specific contact list of these organizations from the local public health agencies, even if the agencies are not located within the water system's service area.

3. Provide information with the water bills. No less often than quarterly, water systems shall provide information on or in each water bill as long as the system exceeds the action level for lead. The message on the water bill shall include the following statement exactly as written except for the text in brackets for which the water system shall include system-specific information: [INSERT NAME OF WATER SYSTEM] found high levels of lead in drinking water in some homes. Lead can cause serious health problems. For more information please call [INSERT NAME OF WATER SYSTEM] [or visit (INSERT YOUR WEB SITE HERE)]. The message or delivery mechanism may be modified in consultation with the department to allow a separate mailing of public education materials to customers if the water system cannot place the information on water bills.

4. Post material meeting the content requirements of par. (1) on the water system's Web site if the system serves a population greater than 100,000.

5. Submit a press release to newspaper, television and radio stations.

6. Conduct additional education activities. In addition to subd. 2.b., systems shall implement at least three activities from one or more categories listed in this subdivision. The educational content and selection of these activities shall be determined in consultation with the department.

a. Public service announcements.

b. Paid advertisements.

c. Public area information displays.

d. E-mails to customers.

e. Public meetings.

f. Household deliveries.

g. Targeted individual customer contact.

h. Direct material distribution to all multi-family homes and institutions.

i. Other methods approved by the department.

7. For systems that are required to conduct monitoring annually or less frequently, the end of the monitoring period is September 30 of the calendar year in which the sampling occurs, or, if the department has established an alternate monitoring period, the last day of that period.

(c) As long as a community water system exceeds the action level, it shall repeat the activities pursuant to par. (2)(b) as described in this paragraph.

1. A community water system shall repeat the tasks contained in par. (b)1, 2 and 4 every 12 months.

2. A community water system shall repeat the tasks contained in par. (b)3 with each billing cycle.

3. A community water system serving a population greater than 100,000 shall post and retain material on a publicly accessible Web site pursuant to par. (b)4.

4. A community water system shall repeat the task in par. (b)5, twice every 12 months on a schedule agreed upon with the department. The department may allow activities in par. (b) to extend beyond the 60-day requirement if needed for implementation purposes on a case-by-case basis. However, this extension must be approved in writing by the department in advance of the 60-day deadline.

(d) Non-transient non-community water system public education tasks. No later than 60 days after the end of the monitoring period in which the exceedance occurred, unless it already is repeating public education tasks pursuant to par. (e), a non-transient noncommunity water system shall deliver the public education materials specified in sub. (1), by posting informational posters regarding lead in drinking water in a public place or common area in each of the buildings served by the system; and distributing informational pamphlets or brochures, or both, regarding lead in drinking water to each person served by the non-transient non-community water system. The department may allow the system to utilize electronic transmission in lieu of, or combined with, printed materials as long as it achieves at least the same coverage. For systems that are required to conduct monitoring annually or less frequently, the end of the monitoring period is September 30 of the calendar year in which the sampling occurs, or, if the department has established an alternate monitoring period, the last day of that period.

(e) A non-transient non-community water system shall repeat the tasks contained in par. (d) at least once during each calendar year in which the system exceeds the lead action level. The department may, on a case-by-case basis, allow activities in par. (d) to extend beyond the 60-day requirement if needed for implementation purposes . However, this extension is required to be approved in writing by the department in advance of the 60-day deadline.

(f) A water system may discontinue delivery of public education materials if the system has met the lead action level during the most recent six-month monitoring period conducted pursuant to s. NR 809.547. The system shall recommence public education in accordance with this section if it subsequently exceeds the lead action level during any monitoring period.

(g) A community water system may apply to the department in writing unless the department has waived the requirement for prior approval, to use only the text specified in sub. (1)(a) in lieu of the text in subs. (1)(a) and (b) and to perform the tasks listed in pars. (d) and (e) in lieu of the tasks in pars. (b) and (c) if all of the following are met:

1. The system is a facility, such as a prison or a hospital, where the population served is not capable of or is prevented from making improvements to plumbing or installing point of use treatment devices.

2. The system provides water as part of the cost of services provided and does not separately charge for water consumption.

(h) Reduction in public education requirements for systems serving 3300 or fewer people. A community water system serving 3,300 or fewer people may limit certain aspects of the system's public education programs as follows:

1. With respect to the requirements of par. (b)6, a system serving 3,300 or fewer shall implement at least one of the activities listed in that paragraph.

2. With respect to the requirements of par. (b)2, a system serving 3,300 or fewer people may limit the distribution of the public education materials required under that paragraph to facilities and organizations served by the system that are most likely to be visited regularly by pregnant women and children.

3. With respect to the requirements of par. (b)5, the department may waive this requirement for systems serving 3,300 or fewer persons as long as the system distributes notices to every household served by the system.

(3) SUPPLEMENTAL MONITORING FOR LEAD**.** A water system that fails to meet the lead action level on the basis of tap samples collected in accordance with s. NR 809.547 shall offer to sample the tap water of any customer who requests it. The system is not required to pay for collecting or analyzing the sample, nor is the system required to collect and analyze the sample itself.

(4) NOTIFICATION OF TAP SAMPLE RESULTS. (a) Reporting requirement. All water systems shall provide a notice of the individual tap results from lead tap water monitoring carried out under the requirements of s. NR 809.547 to the persons served by the water system at the specific sampling site from which the sample was taken, e.g., the occupants of the residence where the tap was tested.

(b) Timing of notification. A water system shall provide the consumer notice as soon as practical, but no later than 30 days after the system learns of the tap monitoring results.

(c) Content. The consumer notice shall include the results of lead tap water monitoring for the tap that was tested, an explanation of the health effects of lead, steps consumers can take to reduce exposure to lead in drinking water and contact information for the water utility. The notice shall also provide the maximum contaminant level goal and the action level for lead and the definitions for these two terms from s. NR 809.833(2).

(d) Delivery. The consumer notice shall be provided to persons served at the tap that was tested, either by mail or by another method approved by the department. For example, upon approval by the department, a non-transient noncommunity water system could post the results on a bulletin board in the facility to allow users to review the information. The system shall provide the notice to customers at sample taps tested, including consumers who do not receive water bills.

NR 809.547 Monitoring requirements for lead and copper in tap water. (1) SAMPLE SITE LOCATION. (a) By the applicable date for commencement of monitoring under sub. (4) (a), each water system owner or operator shall complete a materials evaluation of its distribution system in order to identify a pool of targeted sampling sites that meet the requirements as specified in pars. (c) to (f), and which is sufficiently large to ensure that the water system owner or operator can collect the number of lead and copper tap samples required in sub. (3). All sites from which first draw samples are collected shall be selected from this pool of targeted sampling sites. Sampling sites may not include faucets that have point-of-use or point-of-entry treatment devices designed to remove inorganic contaminants.

(b) A water system owner or operator shall use the information on lead, copper and galvanized steel that it is required to collect under s. NR 809.119 when conducting a materials evaluation. When an evaluation of the information collected pursuant to s. NR 809.119(4) is insufficient to locate the requisite number of lead and copper sampling sites that meet the targeting criteria in this subsection, the water system owner or operator shall review the following sources of information in order to identify a sufficient number of sampling sites. In addition, the system owner or operator shall seek to collect such information where possible in the course of its normal operations, e.g., checking service line materials when reading water meters or performing maintenance activities:

1. All plumbing codes, permits and records in the files of the building department which indicate the plumbing materials that are installed within publicly and privately owned structures connected to the distribution system.
2. All inspections and records of the distribution system that indicate the material composition of the service connections that connect a structure to the distribution system.
3. All existing water quality information, which includes the results of all prior analyses of the system or individual structures connected to the system, indicating locations that may be particularly susceptible to high lead or copper concentrations.

(c) The "tier 1 sampling sites" selected for a community water system's sampling pool shall consist of single family structures that meet at least one of the following requirements:

1. Contain copper pipes with lead solder installed after 1982 or contain lead pipes.
2. Are served by a lead service line.

(d) When multiple-family residences comprise at least 20% of the structures served by a water system, the system may include the types of structures described in par. (c) in its sampling pool.

(e) Any community water system with insufficient tier 1 sampling sites shall complete its sampling pool with "tier 2 sampling sites," consisting of buildings, including multiple-family residences that meet at least one of the following requirements:

1. Contain copper pipes with lead solder installed after 1982 or contain lead pipes.
2. Are served by a lead service line.

(f) Any community water system with insufficient tier 1 and tier 2 sampling sites shall complete its sampling pool with "tier 3 sampling sites", consisting of single family structures that contain copper pipes with lead solder installed before 1983. A community water system with insufficient tier 1, tier 2 and tier 3 sampling sites shall complete its sampling pool with representative sites throughout the distribution system. For the purpose of this paragraph, a representative site is a site at which the plumbing materials used at that site would be commonly found at other sites served by the water system.

(g) The "tier one sampling sites" selected for a non-transient non-community water system shall consist of buildings that meet at least one of the following requirements:

1. Contain copper pipes with lead solder installed after 1982 or contain lead pipes.
2. Are served by a lead service line.

(h) A non-transient, non-community water system with insufficient tier 1 sites that meet the targeting criteria in par. (g) shall complete its sampling pool with sampling sites that contain copper pipes with lead solder installed before 1983. If additional sites are needed to complete the sampling pool, the non-transient non-community water system

shall use representative sites throughout the distribution system. For the purpose of this paragraph, a representative site is a site at which the plumbing materials used at that site would be commonly found at other sites served by the water system.

(i) Any water system owner or operator whose distribution system contains lead service lines shall draw 50% of the samples collected during each monitoring period from sites that contain lead pipes, or copper pipes with lead solder, and 50% of those samples from sites served by a lead service line. A water system owner or operator who cannot identify a sufficient number of sampling sites served by a lead service line shall collect first draw samples from all of the sites identified as being served by such lines.

(2) SAMPLE COLLECTION METHODS. (a) All tap samples for lead and copper collected in accordance with this subchapter, with the exception of lead service line samples collected under s. NR 809.545 (3) and samples collected under par. (e), shall be first draw samples.

(b) Each first-draw tap sample for lead and copper shall be one liter in volume and have stood motionless in the plumbing system of each sampling site for at least 6 hours. First-draw samples from residential housing shall be collected from the cold water kitchen tap or bathroom sink tap. First-draw samples from a nonresidential building shall be collected at an interior tap from which water is typically drawn for consumption. Non-first-draw samples collected in lieu of first-draw samples pursuant to par. (e) shall be one liter in volume and shall be collected at an interior tap from which water is typically drawn for consumption. First-draw samples may be collected by the system or the system may allow residents to collect first-draw samples after instructing the residents of the sampling procedures specified in this paragraph. To avoid problems of residents handling nitric acid, acidification of first-draw samples may be done up to 14 days after the sample is collected. After acidification to resolubilize the metals, the sample shall stand in the original container for the time specified in the approved EPA method before the sample can be analyzed. If a system allows residents to perform sampling, the system may not challenge, based on alleged errors in sample collection, the accuracy of sampling results.

(c) Each service line sample shall be one liter in volume and have stood motionless in the lead service line for at least 6 hours. Lead service line samples shall be collected in one of the following 3 ways:

1. At the tap after flushing the volume of water between the tap and the lead service line. The volume of water shall be calculated based on the interior diameter and length of the pipe between the tap and the lead service line.

2. Tapping directly into the lead service line.

3. If the sampling site is a building constructed as a single-family residence, allowing the water to run until there is a significant change in temperature which would be indicative of water that has been standing in the lead service line.

(d) A water system owner or operator shall collect each first-draw tap sample from the same sampling site from which it collected a previous sample. If for any reason the water system owner or operator cannot gain entry to a sampling site in order to collect a follow-up tap sample, the system owner or operator may collect the follow-up tap sample from another sampling site in its sampling pool as long as the new site meets the same targeting criteria, and is within reasonable proximity of the original site.

(e) The owner or operator of a non-transient non-community water system or a community water system that meets the criteria of s. NR 809.546(2)(g) that does not have enough taps that can supply first-draw samples, may apply to the department in writing to substitute non-first-draw samples. Owners and operators of these water systems shall collect as many first-draw samples from appropriate taps as possible and identify sampling times and locations that would likely result in the longest standing time for the remaining sites. The department may waive the requirement for prior departmental approval of non-first-draw sample sites selected by the system, either through department rule or written notification to the system.

(3) NUMBER OF SAMPLES. Water system owners or operators shall collect at least one sample during each monitoring period specified in sub. (4) from the number of sites listed in the following column titled "standard monitoring." A system owner or operator conducting reduced monitoring under sub. (4) (d) may collect one sample from the number of sites specified in the second following column during each monitoring period specified in sub. (4) (d). The department may specify sampling locations when a system is conducting reduced monitoring. A public water system that has fewer than five drinking water taps that can be used for human consumption meeting the sample site criteria of sub. (1) of this section to reach the required number of sample sites listed in this subsection, must collect at least one sample from each tap and then must collect additional samples from those taps on different days during the monitoring period to meet the required number of sites. Alternatively the Department may allow these public water systems to collect a number of samples less than the number of sites specified in this subsection, provided that 100 percent of all taps that can be used for human consumption are sampled. The department may approve this reduction of the minimum number of samples in writing based on a request from the system or onsite verification by the department

System Size (# People Served)	**# of sites (Standard Monitoring)**	**# of sites (Reduced Monitoring)**
>100,000	100	50
10,001-100,000	60	30
3,301 to 10,000	40	20
501 to 3,300	20	10
101 to 500	10	5
≤100	5	5

(4) TIMING OF MONITORING. (a) *Initial tap sampling.* The first 6-month monitoring period for small, medium and large-size systems shall begin on the following dates:

System Size (# People Served)	**First six-month Monitoring Period Begins On**
>50,000	January 1, 1992
3,301 to 50,000	July 1, 1992

≤ 3,300	July 1, 1993

1. The owners and operators of all large systems shall monitor during 2 consecutive 6-month periods.

2. The owners and operators of all small and medium-size systems shall monitor during each 6-month monitoring period until one of the following occurs:

a. The system exceeds the lead or copper action level and is therefore required to implement the corrosion control treatment requirements under s. NR 809.542, in which case the system owner or operator shall continue monitoring in accordance with par. (b).

b. The system meets the lead or copper action levels during 2 consecutive 6-month monitoring periods, in which case the system owner or operator may reduce monitoring in accordance with par. (d).

(b) *Monitoring after installation of corrosion control and source water treatment.* 1. Any large system with optimal corrosion control treatment installed pursuant to s. NR 809.542 (4) (d) shall be monitored during 2 consecutive 6-month periods by the date specified in s. NR 809.542 (4) (e).

2. Any small or medium-size system with optimal corrosion control treatment installed pursuant to s. NR 809.542 (5) (e) shall be monitored during 2 consecutive 6-month monitoring periods by the date specified in s. NR 809.542 (5) (f).

3. Any system owner or operator that installs source water treatment pursuant to s. NR 809.544 (1) (c) shall monitor during 2 consecutive 6-month monitoring periods by the date specified in s. NR 809.544 (1) (d).

(c) *Monitoring after the department specifies water quality parameter values for optimal corrosion control.* After the department approves the values for water quality control parameters under s. NR 809.543 (6), the system owner or operator shall monitor during each subsequent 6-month monitoring period, with the first monitoring period to begin on the date the department specifies the optimal values under s. NR 809.543 (6).

(d) *Reduced monitoring.* 1. The owner or operator of a small or medium-size water system that meets the lead and copper action levels during each of 2 consecutive 6-month monitoring periods may reduce the number of samples in accordance with sub. (3), and reduce the frequency of sampling to once per year. A small or medium water system collecting fewer than five samples as specified in sub. (3) of this section, that meets the lead and copper action levels during each of two consecutive six-month monitoring periods may reduce the frequency of sampling to once per year. In no case may the system reduce the number of samples required below the minimum of one sample per available tap. This sampling shall begin during the calendar year immediately following the end of the second consecutive six-month monitoring period.

2. Any water system that meets the lead action level and maintains the range of values for the water quality control parameters reflecting optimal corrosion control treatment specified by the department under s. NR 809.543(6) during each of two consecutive six-month monitoring periods may reduce the frequency of monitoring to once per year and reduce the number of lead and copper samples in accordance with sub. (3) of this section if it receives written approval from the department. This sampling shall begin during the calendar year immediately following the end of the second consecutive six-month monitoring period. The department shall review monitoring, treatment, and other relevant information submitted by the water system in accordance with s. NR 809.55, and shall notify the system in writing when it determines the system is eligible to commence

reduced monitoring pursuant to this paragraph. The department shall review, and where appropriate, revise its determination when the system submits new monitoring or treatment data, or when other data relevant to the number and frequency of tap sampling becomes available.

3. A small or medium-size water system that meets the lead and copper action levels during three consecutive years of monitoring may reduce the frequency of monitoring for lead and copper from annually to once every three years. Any water system that meets the lead action level and maintains the range of values for the water quality control parameters reflecting optimal corrosion control treatment specified by the department under s. NR 809.543 (6) during three consecutive years of monitoring may reduce the frequency of monitoring from annually to once every three years if it receives written approval from the department. Samples collected once every three years shall be collected no later than every third calendar year. The department shall review monitoring, treatment, and other relevant information submitted by the water system in accordance with s. NR 809.55, and shall notify the system in writing when it determines the system is eligible to reduce the frequency of monitoring to once every three years. The department shall review, and where appropriate, revise its determination when the system submits new monitoring or treatment data, or when other data relevant to the number and frequency of tap sampling becomes available.

4. A water system owner or operator that reduces the number and frequency of sampling shall collect these samples from representative sites included in the pool of targeted sampling sites identified in sub. (1). System owners or operators sampling annually or less frequently shall conduct the lead and copper tap sampling during the months of June, July, August or September unless the department has approved a different sampling month.

a. The department, at its discretion, may approve a different period for conducting the lead and copper tap sampling for systems collecting a reduced number of samples. Such a period shall be no longer than four consecutive months and must represent a time of normal operation where the highest levels of lead are most likely to occur. For a non-transient noncommunity water system that does not operate during the months of June through September, and for which the period of normal operation where the highest levels of lead are most likely to occur is not known, the department shall designate a period that represents a time of normal operation for the system. This sampling shall begin during the period approved or designated by the department in the calendar year immediately following the end of the second consecutive six-month monitoring period for systems initiating annual monitoring and during the three-year period following the end of the third consecutive calendar year of annual monitoring for systems initiating triennial monitoring.

b. Systems monitoring annually, that have been collecting samples during the months of June through September and that receive department approval to alter their sample collection period under this subd. 4. a. shall collect their next round of samples during a time period that ends no later than 21 months after the previous round of sampling. Systems monitoring triennially that have been collecting samples during the months of June through September, and receive department approval to alter the sampling collection period as under this subd. 4. a. shall collect their next round of samples during a time period that ends no later than 45 months after the previous round of sampling.

Subsequent rounds of sampling shall be collected annually or triennially, as required by this section. Small water systems with waivers, granted pursuant to sub. (7), that have been collecting samples during the months of June through September and receive department approval to alter their sample collection period under this subd. 4. a. shall collect their next round of samples before the end of the 9-year period.

5. Any water system owner or operator that demonstrates for 2 consecutive 6-month monitoring periods that the tap water lead level computed under s. NR 809.541 (3) (c) is less than or equal to 0.005 mg/L and the tap water copper level computed under s. NR 809.541 (3) (c) is less than or equal to 0.65 mg/L may reduce the number of samples in accordance with sub. (3) and reduce the frequency of sampling to once every 3 calendar years.

6. a. Systems that are on reduced monitoring shall increase monitoring by the following: Water suppliers for a small or medium-sized water system subject to reduced monitoring that exceeds the lead or copper action level shall resume sampling in accordance with par. (c) and collect the number of samples specified for standard monitoring under sub. (3). A system owner or operator shall also conduct water quality parameter monitoring in accordance with s. NR 809.548 (2), (3) or (4) during the monitoring period in which the action level was exceeded. Any water system subject to reduced monitoring frequency that fails to operate within the range of values for the water quality control parameters specified by the department under s. NR 809.543 (6) shall resume tap water sampling in accordance with par. (c) and collect the number of samples specified for standard monitoring under sub. (3).

b. Any water system subject to the reduced monitoring frequency that fails to meet the lead action level during any four-month monitoring period or that fails to operate at or above the minimum value or within the range of values for the water quality parameters specified by the department under s. NR 809.543 (6) for more than 9 days in any 6-month period specified in s. NR 809.548 (4) shall conduct tap water sampling for lead and copper at the frequency specified in par. (c), collect the number of samples specified for standard monitoring under sub. (3), and shall resume monitoring for water quality parameters within the distribution system in accordance with s. NR 809.548 (4). This standard tap water sampling shall begin no later than the six-month period beginning January 1 of the calendar year following the lead action level exceedance or water quality parameter excursion.

7. A system under subd. 6.b. may resume reduced monitoring for lead and copper at the tap and for water quality parameters within the distribution system under the following conditions:

a. The system may resume annual monitoring for lead and copper at the tap at the reduced number of sites specified in sub. (3) after it has completed two subsequent six-month rounds of monitoring that meet the criteria of par. (d)2 and the system has received written approval from the department that it is appropriate to resume reduced monitoring on an annual frequency. This sampling shall begin during the calendar year immediately following the end of the second consecutive six-month monitoring period.

b. The system may resume triennial monitoring for lead and copper at the tap at the reduced number of sites after it demonstrates through subsequent rounds of monitoring that it meets the criteria of either par. (d)3 or 5 and the system has received written approval from the department that it is appropriate to resume triennial monitoring.

c. The system may reduce the number of water quality parameter tap water samples required in accordance with s. NR 809.548(5)(a) and the frequency with which it collects such samples in accordance with s. NR 809.548(5)(b). Such a system may not resume triennial monitoring for water quality parameters at the tap until it demonstrates, in accordance with the requirements of s. NR 809.548(5)(b) that it has re-qualified for triennial monitoring.

8. Any water system subject to a reduced monitoring frequency under par. (d) shall notify the department in writing in accordance with s. NR 809.55(1)(c)3. of any upcoming long-term change in treatment or addition of a new source as described in that section. The department must review and approve the addition of a new source or long-term change in water treatment before it is implemented by the water system. After approved modifications are completed the system may resume reduced monitoring for lead and copper under the following conditions:

a. The system may resume annual monitoring for lead and copper at the tap at the reduced number of sites specified in sub. (3) after it has completed 2 subsequent 6-month rounds of monitoring that meet the criteria in subd. 2. and the system has received written approval from the department that it is appropriate to resume reduced monitoring on an annual frequency.

b. The system may resume triennial monitoring for lead and copper at the tap at the reduced number of sites after it demonstrates through subsequent rounds of monitoring that it meets the criteria of either subd. 3. or 5. and the system has received written approval from the department that it is appropriate to resume triennial monitoring.

c. The system may reduce the number of water quality parameter tap water samples required in accordance with s. NR 809.548 (5) (a) and the frequency with which it collects such samples in accordance with s. NR 809.548 (5) (b). A system may not resume triennial monitoring for water quality parameters at the tap until it demonstrates, in accordance with the requirements of s. NR 809.548 (5) (b), that it has re-qualified for triennial monitoring.

9. Any water system subject to a reduced monitoring frequency under this paragraph that either adds a new source of water or changes any water treatment shall inform the department in writing in accordance with s. NR 809.55 (1) (e). The department may require the system to resume sampling in accordance with sub. (2) (c) and collect the number of samples specified for standard monitoring under sub. (3) or take other appropriate steps such as increased water quality parameter monitoring or re-evaluation of its corrosion control treatment given the potentially different water quality considerations.

(5) ADDITIONAL MONITORING BY SYSTEM OWNER OR OPERATORS. The results of any monitoring conducted in addition to the minimum requirements of this section shall be considered by the system owner or operator and the department in making any determinations, i.e., calculating the 90th percentile lead or copper level, under this subchapter.

(6) INVALIDATION OF LEAD OR COPPER TAP WATER SAMPLES. A sample invalidated under this subsection does not count toward determining lead or copper 90th percentile levels under s. NR 809.541 (3) (c) or toward meeting the minimum monitoring requirements of sub. (3).

(a) The department may invalidate a lead or copper tap water sample if at least one of the following conditions is met:

1. The laboratory establishes that improper sample analysis caused erroneous results.

2. The department determines that the sample was taken from a site that did not meet the site selection criteria of this section.

3. The sample container was damaged in transit.

4. There is substantial reason to believe that the sample was subject to tampering.

(b) The water system owner or operator shall report the results of all samples to the department and all supporting documentation for samples the water system owner or operator believes should be invalidated.

(c) To invalidate a sample under par. (a), the decision and the rationale for the decision shall be documented in writing. The department may not invalidate a sample solely on the grounds that a follow-up sample result is higher or lower than that of the original sample.

(d) The water system owner or operator shall collect replacement samples for any samples invalidated under this subsection if, after the invalidation of one or more samples, the system has too few samples to meet the minimum requirements of sub. (3). Any replacement samples shall be taken as soon as possible, but no later than 20 days after the date the department invalidates the sample or by the end of the applicable monitoring period, whichever occurs later. Replacement samples taken after the end of the applicable monitoring period may not also be used to meet the monitoring requirements of a subsequent monitoring period. The replacement samples shall be taken at the same locations as the invalidated samples or, if that is not possible, at locations other than those already used for sampling during the monitoring period.

(7) MONITORING WAIVERS FOR SMALL WATER SYSTEMS. The owner or operator of any small water system that meets the criteria of this subsection may apply to the department to reduce the frequency of monitoring for lead and copper under this section to once every 9 years, also known as a "full waiver," if it meets all of the materials criteria specified in par. (a) and all of the monitoring criteria specified in par. (b). If department rules permit, any small water system that meets the criteria in pars. (a) and (b) only for lead, or only for copper, may apply to the department for a waiver to reduce the frequency of tap water monitoring to once every 9 years for that contaminant only, also known as a "partial waiver."

(a) *Materials criteria*. The system owner or operator shall demonstrate that its distribution system and service lines and all drinking water supply plumbing, including plumbing conveying drinking water within all residences and buildings connected to the system, are free of lead-containing materials or copper-containing materials, as those terms are defined in this paragraph, as follows:

1. 'Lead waiver.' To qualify for a full waiver, or a waiver of the tap water monitoring requirements for lead, known as a "lead waiver," the water system owner or operator shall provide certification and supporting documentation to the department that the system is free of all lead-containing materials, and complies with all of the following:

a. It contains no plastic pipes which contain lead plasticizers, or plastic service lines which contain lead plasticizers.

b. It is free of lead service lines, lead pipes, lead soldered pipe joints, and leaded brass or bronze alloy fittings and fixtures, unless the fittings and fixtures meet the specifications of any standard established pursuant to 42 USC 300g-6(e).

Note: 42 USC 300g-6(e) is section 1417 (e) of the federal Safe Drinking Water Act.

2. 'Copper waiver.' To qualify for a full waiver, or a waiver of the tap water monitoring requirements for copper, hereafter known as a "copper waiver," the water system owner or operator shall provide certification and supporting documentation to the department that the system contains no copper pipes or copper service lines.

(b) *Monitoring criteria for waiver issuance.* The system shall have completed at least one 6-month round of standard tap water monitoring for lead and copper at sites approved by the department and from the number of sites required by sub. (3) and demonstrate that the 90th percentile levels for any and all rounds of monitoring conducted since the system became free of all lead-containing and copper-containing materials, as appropriate, meet the following criteria:

1. 'Lead waiver.' To qualify for a lead waiver, the system shall demonstrate that the 90th percentile lead level does not exceed 0.005 mg/L.

2. 'Copper waiver.' To qualify for a copper waiver, the system shall demonstrate that the 90th percentile copper level does not exceed 0.65 mg/L.

(c) *Department approval of waiver application.* The department shall notify the system owner or operator of its waiver determination, in writing, setting forth the basis of its decision and any condition of the waiver. As a condition of the waiver, the department may require the system owner or operator to perform specific activities, such as limited monitoring, periodic outreach to customers to remind them to avoid installation of materials that might void the waiver, to avoid the risk of lead or copper concentration of concern in tap water. The small water system shall continue monitoring for lead and copper at the tap as required by sub. (4) (a) to (d), as appropriate, until it receives written notification from the department that the waiver has been approved.

(d) *Monitoring frequency for systems with waivers.* 1. A system owner or operator with a full waiver shall conduct tap water monitoring for lead and copper in accordance with sub. (4) (d) 4. at the reduced number of sampling sites identified in sub. (3) at least once every 9 years and provide the materials certification specified in par. (a) for both lead and copper to the department along with the monitoring results.

2. A system owner or operator with a partial waiver shall conduct tap water monitoring for the waived contaminant in accordance with sub. (4) (d) 4. at the reduced number of sampling sites specified in sub. (3) at least once every 9 years and provide the materials certification specified in par. (a) pertaining to the waived contaminant along with the monitoring results. The system owner or operator shall also continue to monitor for the non-waived contaminant in accordance with requirements of sub. (4) (a) to (d), as appropriate.

3. Any water system with a full or partial waiver shall notify the department in writing in accordance with s. NR 809.55(1)(c)3 of any upcoming long-term change in treatment or addition of a new source, as described in that section. The department must review and approve the addition of a new source or long-term change in water treatment before it is implemented by the water system. The department has the authority to require the system to add or modify waiver conditions. The department may require recertification that the system is free of lead-containing or copper-containing materials, or both, and

may require additional rounds of monitoring, if it deems the modifications are necessary to address treatment or source water changes at the system.

4. If a system with a full or partial waiver becomes aware that it is no longer free of lead-containing or copper-containing materials as a result of new construction or repairs, the system owner or operator shall notify the department in writing no later than 60 days after becoming aware of a change.

(e) *Continued eligibility.* If the system continues to satisfy the requirements of par. (d), the waiver shall be renewed automatically, unless any of the conditions listed in subds. 1. to 3. occurs. A system whose waiver has been revoked may re-apply for a waiver at the time it again meets the appropriate materials and monitoring criteria of pars. (a) and (b).

1. A system with a lead waiver no longer satisfies the materials criteria of par. (a) 1. if the 90th percentile lead level is greater than 0.005 mg/L.

2. A system with a copper waiver no longer satisfies the materials criteria of par. (a) 2. if the 90th percentile copper level is greater than 0.65 mg/L.

3. The department notifies the system owner or operator, in writing, that the waiver has been revoked, setting forth the basis of its decision.

(f) *Requirements following waiver revocation.* A system whose full or partial waiver has been revoked by the department is subject to the corrosion control treatment and lead and copper tap water monitoring requirements, as follows:

1. If the system exceeds the lead or copper action level, or both, the system shall implement corrosion control treatment in accordance with the deadlines specified in s. NR 809.542 (5), and any other applicable requirements of this paragraph.

2. If the system meets both the lead and the copper action level, the system shall monitor for lead and copper at the tap no less frequently than once every 3 years using the reduced number of sample sites specified in sub. (3).

(g) *Pre-existing waivers.* Small water system waivers approved by the department in writing prior to April 11, 2000 shall remain in effect under the following conditions:

1. If the system has demonstrated that it is free of both lead-containing and copper-containing materials, as required by par. (a) and that its 90th percentile lead levels and 90th percentile copper levels meet the criteria of par. (b), the waiver remains in effect so long as the system continues to meet the waiver eligibility criteria of par. (e). The first round of tap water monitoring conducted pursuant to par. (d) shall be completed no later than 9 years after the last time the system has monitored for lead and copper at the tap. Samples collected every nine years shall be collected no later than every ninth calendar year.

2. If the system has met the materials criteria of par. (a) but has not met the monitoring criteria of par. (b), the system shall conduct a round of monitoring for lead and copper at the tap demonstrating that it meets the criteria of par. (b) to meet initial monitoring requirements. Thereafter, the waiver shall remain in effect as long as the system meets the continued eligibility criteria of par. (e). The first round of tap water monitoring conducted pursuant to par. (d) shall be completed no later than 9 years after the round of monitoring conducted pursuant to par. (b).

NR 809.548 Monitoring requirements for water quality parameters. Owners or operators of all large systems, and of all small and medium-size systems that exceed the

lead or copper action level, shall monitor water quality parameters in addition to lead and copper in accordance with this section. The requirements of this section are summarized in the table at the end of this section.

(1) GENERAL REQUIREMENTS. (a) *Sample collection methods.* 1. Tap samples shall be representative of water quality throughout the distribution system taking into account the number of persons served, the different sources of water, the different treatment methods employed by the system owner or operator, and seasonal variability. Tap sampling under this section is not required to be conducted at taps targeted for lead and copper sampling under s. NR 809.547 (1).

2. Samples collected at the entry points to the distribution system shall be from locations representative of each source after treatment. If a system draws water from more than one source and the sources are combined before distribution, the system owner or operator shall sample at an entry point to the distribution system during periods of normal operating conditions, i.e., when water is representative of all sources being used.

(b) *Number of samples.* 1. System owners or operators shall collect 2 tap samples for applicable water quality parameters during each monitoring period specified under subs. (2) to (5) from the following number of sites.

System Size (# People Served)	**# of Sites For Water Quality Parameters**
>100,000	25
10,001-100,000	10
3,301 to 10,000	3
501 to 3,300	2
101 to 500	1
≤100	1

2. Except as provided in sub. (3) (c), water suppliers shall collect 2 samples for each applicable water quality parameter at each entry point to the distribution system during each monitoring period specified in sub. (2).

(2) INITIAL SAMPLING. Owners or operators of all large water systems shall measure the applicable water quality parameters as specified below at taps and at each entry point to the distribution system during each 6-month monitoring period specified in s. NR 809.547 (4) (a). Owners or operators of all small and medium-size systems shall measure the applicable water quality parameters at the locations specified below during each 6-month monitoring period specified in s. NR 809.547 (4) (a) during which the system exceeds the lead or copper action level.

(a) At taps:

1. pH;
2. Alkalinity;
3. Orthophosphate, when an inhibitor containing a phosphate compound is used;
4. Silica, when an inhibitor containing a silicate compound is used;
5. Calcium;
6. Conductivity; and
7. Water temperature.

(b) At each entry point to the distribution system: all of the applicable parameters listed in par. (a).

(3) MONITORING AFTER INSTALLATION OF CORROSION CONTROL. The owner or operator of any large system which installs optimal corrosion control treatment pursuant to s. NR 809.542 (4) (d) shall measure the water quality parameters at the following locations and frequencies during each 6-month monitoring period specified in s. NR 809.547 (4) (b) 1. The owner or operator of any small or medium-size system which installs optimal corrosion control treatment shall conduct such monitoring during each 6-month monitoring period specified in s. NR 809.547 (4) (b) 2. in which the system exceeds the lead or copper action level.

(a) At taps, 2 samples for:

1. pH;
2. Alkalinity;
3. Orthophosphate, when an inhibitor containing a phosphate compound is used;
4. Silica, when an inhibitor containing a silicate compound is used; and
5. Calcium, when calcium carbonate stabilization is used as part of corrosion control.

(b) Except as provided in par. (c), at each entry point to the distribution system, one sample every 2 weeks for:

1. pH;
2. When alkalinity is adjusted as part of optimal corrosion control, a reading of the dosage rate of the chemical used to adjust alkalinity and the alkalinity concentration; and
3. When a corrosion inhibitor is used as part of optimal corrosion control, a reading of the dosage rate of the inhibitor used and the concentration of orthophosphate or silica, whichever is applicable.

(c) Any groundwater system can limit entry point sampling described in par. (b) to those entry points that are representative of water quality and treatment conditions throughout the system. If water from untreated groundwater sources mixes with water from treated groundwater sources, the system shall monitor for water quality parameters both at representative entry points receiving treatment and representative entry points receiving no treatment. Prior to the start of any monitoring under this subsection, the system shall provide to the department written information identifying the selected entry points and documentation, including information on seasonal variability, sufficient to demonstrate that the sites are representative of water quality and treatment conditions throughout the system.

(4) MONITORING AFTER THE DEPARTMENT SPECIFIES WATER QUALITY PARAMETER VALUES FOR OPTIMAL CORROSION CONTROL. After the department specifies the values for applicable water quality control parameters reflecting optimal corrosion control treatment under s. NR 809.543 (6), all large systems shall measure the applicable water quality parameters in accordance with sub. (3) and determine compliance with the requirements of s. NR 809.543 (8) every six months with the first six-month period to begin on either January 1 or July 1, whichever comes first, after the department specifies the optimal values under s. NR 809.543 (6). Any small or medium-size system shall conduct such monitoring during each six-month period specified in this paragraph in which the system exceeds the lead or copper action level. For any such small and medium-size system that is subject to a reduced monitoring frequency pursuant to s. NR 809.547 (4)(d) at the time of the action level exceedance, the start of the applicable six-month monitoring period

under this paragraph shall coincide with the start of the applicable monitoring period under s. NR 809.547 (4) (d). Compliance with department designated optimal water quality parameter values shall be determined as specified under s. NR 809.543 (8).

(5) REDUCED MONITORING. (a) Any water system that maintains the range of values for the water quality parameters reflecting optimal corrosion control treatment during each of 2 consecutive 6-month monitoring periods under sub. (4) shall continue monitoring at the entry points to the distribution system as specified in sub. (3) (b). Such system may collect 2 tap samples for applicable water quality parameters from the following reduced number of sites during each 6-month monitoring period.

(# People Served) System Size	**Reduced # of Sites for Water Quality Parameters**
>100,000	10
10,001 to 100,000	7
3,301 to 10,000	3
501 to 3,300	2
101 to 500	1
≤100	1

(b) 1. Any water system that maintains the range of values for the water quality parameters reflecting optimal corrosion control treatment specified by the department under s. NR 809.543 (6) during 3 consecutive years of monitoring may reduce the frequency with which it collects the number of tap samples for applicable water quality parameters specified in par. (a) from every six months to annually. This sampling begins during the calendar year immediately following the end of the monitoring period in which the third consecutive year of six-month monitoring occurs. Any water system that maintains the range of values for the water quality parameters reflecting optimal corrosion control treatment specified by the department under s. NR 809.543 (6) during 3 consecutive years of annual monitoring under this paragraph may reduce the frequency with which it collects the number of tap samples for applicable water quality parameters specified in par. (a) of this section from annually to every 3 years. This sampling begins no later than the third calendar year following the end of the monitoring period in which the third consecutive year of monitoring occurs.

2. A water system may reduce the frequency with which it collects tap samples for applicable water quality parameters specified in par. (a) to every 3 years if it demonstrates during 2 consecutive monitoring periods that its tap water lead level at the 90th percentile is less than or equal to the practical quantitation limit for lead specified in s. NR 809.725 (1), Table A, that its tap water copper level at the 90th percentile is less than or equal to 0.65 mg/L for copper in s. NR 809.541 (3) (b), and that it also has maintained the range of values for the water quality parameters reflecting optimal corrosion control treatment specified by the department under s. NR 809.543 (6). Monitoring conducted every three years shall be done no later than every third calendar year.

(c) Any water system that maintains the range of values for the water quality parameters reflecting optimal corrosion control treatment specified by the department

under s. NR 809.543 (6) during 3 consecutive years of annual monitoring may reduce the frequency with which it collects the number of tap samples for applicable water quality parameters specified in par. (a) from annually to every 3 years.

(d) A water system owner or operator that conducts sampling annually shall collect these samples evenly throughout the year so as to reflect seasonal variability.

(e) Any owner or operator that has a water system subject to reduced monitoring frequency that fails to operate within the range of values for the water quality parameters specified by the department under s. NR 809.543 (6) for more than 9 days in any 6-month period specified in s. NR 809.543 (8) shall resume distribution system tap water sampling in accordance with the number and frequency requirements in sub. (4). A system may resume annual monitoring for water quality parameters at the tap at the reduced number of sites specified in par. (a) after it has completed 2 subsequent consecutive 6-month rounds of monitoring that meet the criteria of that paragraph or may resume triennial monitoring for water quality parameters at the tap at the reduced number of sites after it demonstrates through subsequent rounds or monitoring that it meets the criteria of either par. (b) 1. or 2., or both.

Summary of Monitoring Requirements for Water Quality Parameters[1]

Monitoring period	**Parameters[2]**	**Location**	**Frequency**
Initial monitoring	pH, alkalinity, orthophosphate or silica[3], calcium, conductivity, temperature.	Taps and at entry points to distribution system.	Every 6 months.
After installation of corrosion control	pH, alkalinity, orthophosphate or silica[3], calcium[4]. pH, alkalinity, dosage rate and concentration (if alkalinity adjusted as part of corrosion control), inhibitor dosage rate and inhibitor residual[5].	Taps Entry points to the distribution system[6].	Every 6 months. No less frequently than every 2 weeks.
After department specifies parameter values for optimal corrosion control	pH, alkalinity, orthophosphate or silica[3], calcium[4]. pH, alkalinity, dosage rate and concentration (if alkalinity adjusted as part of corrosion control), inhibitor dosage rate and inhibitor residual[5].	Taps Entry points to the distribution system[6].	Every 6 months. No less frequently than every 2 weeks
Reduced monitoring	pH, alkalinity,	Taps	Every 6 months,

	orthophosphate or silica[3], calcium[4]. pH, alkalinity, dosage rate and concentration (if alkalinity adjusted as part of corrosion control), inhibitor dosage rate and inhibitor residual[5].	Entry points to the distribution system[6].	annually[7]or every 3 years[8]; reduced number of sites No less frequently than every 2 weeks

Note: [1] Table is for illustrative purposes; consult the text of this section for precise regulatory requirements.

[2] Small and medium-size systems have to monitor for water quality parameters only during monitoring periods in which the system exceeds the lead or copper action level.

[3] Orthophosphate must be measured only when an inhibitor containing a phosphate compound is used. Silica must be measured only when an inhibitor containing silicate compound is used.

[4] Calcium must be measured only when calcium carbonate stabilization is used as part of corrosion control.

[5] Inhibitor dosage rates and inhibitor residual concentrations (orthophosphate or silica) must be measured only when an inhibitor is used.

[6] Groundwater systems may limit monitoring to representative locations throughout the system.

[7] Water systems may reduce frequency of monitoring for water quality parameters at the tap from every 6 months to annually if they have maintained the range of values for water quality parameters reflecting optimal corrosion control during 3 consecutive years of monitoring.

[8] Water systems may further reduce the frequency of monitoring for water quality parameters at the tap from annually to once every 3 years if they have maintained the range of values for water quality parameters reflecting optimal corrosion control during 3 consecutive years of annual monitoring. Water systems may accelerate to triennial monitoring for water quality parameters at the tap if they have maintained 90th percentile lead levels less than or equal to 0.005 mg/L, 90th percentile copper levels less than or equal to 0.65 mg/L, and the range of water quality parameters designated by the department under s. NR 809.543(7) as representing optimal corrosion control during 2 consecutive 6-month monitoring periods.

NR 809.549 Monitoring requirements for lead and copper in source water. (1) SAMPLE LOCATION, COLLECTION METHODS AND NUMBER OF SAMPLES. (a) The owner or operator of a water system that fails to meet the lead or copper action level on the basis of tap samples collected in accordance with s. NR 809.547 shall collect lead and copper source water samples in accordance with the requirements regarding sample location, number of samples and collection methods:

1. The owner or operator of groundwater systems shall take a minimum of one sample at every entry point to the distribution system which is representative of each well after

treatment. The system shall take one sample at the same sampling location unless conditions make another sampling location more representative of each source or treatment plant.

2. The owner or operator of surface water systems shall take a minimum of one sample at every entry point to the distribution system after any application of treatment or in the distribution system at a point which is representative of each source after treatment. The system shall take each sample at the same sampling location unless conditions make another sampling location more representative of each source or treatment plant. For the purposes of this paragraph, surface water systems include systems with a combination of surface water and groundwater sources.

3. If a system draws water from more than one source and the sources are combined before distribution, the system shall sample at an entry point to the distribution system during periods of normal operating conditions, and when water is representative of all sources being used.

4. The department may reduce the total number of samples which are to be analyzed by allowing the use of compositing. Compositing of samples shall be done by certified laboratory personnel. Composite samples from a maximum of 5 samples are allowed, provided that if the lead concentration in the composite sample is greater than or equal to 0.001 mg/L or the copper concentration is greater than or equal to 0.160 mg/ L, one of the following applies:

a. A follow-up sample shall be taken and analyzed within 14 days at each sampling point included in the composite.

b. If duplicates of or sufficient quantities from the original samples from each sampling point used in the composite are available, the system may use these instead of resampling.

(b) Where the results of sampling indicate an exceedance of maximum permissible source water levels established under s. NR 809.544 (2) (d), the department may require that one additional sample be collected as soon as possible after the initial sample was taken, but not to exceed 2 weeks, at the same sampling point. If a department-required confirmation sample is taken for lead or copper, then the results of the initial and confirmation sample shall be averaged in determining compliance with the department-specified maximum permissible levels. Any sample value below the detection limit shall be considered to be zero. Any value above the detection limit but below 5 ug/l, shall be considered as the measured value.

(2) *Monitoring frequency after system exceeds tap water action level.* Any system which exceeds the lead or copper action level at the tap shall collect one source water sample from each entry point to the distribution system no later than six months after the end of the monitoring period during which the lead or copper action level was exceeded. For monitoring periods that are annual or less frequent, the end of the monitoring period is September 30 of the calendar year in which the sampling occurs, or if the department has established an alternate monitoring period, the last day of that period..

(3) MONITORING FREQUENCY AFTER INSTALLATION OF SOURCE WATER TREATMENT. Any system owner or operator which installs source water treatment pursuant to s. NR 809.544 (1) (b) shall collect an additional source water sample from each entry point to the distribution system during 2 consecutive 6-month monitoring periods by the deadline specified in s. NR 809.544 (1) (d).

(4) MONITORING FREQUENCY AFTER DEPARTMENT SPECIFIES MAXIMUM PERMISSIBLE SOURCE WATER LEVELS OR DETERMINES THAT SOURCE WATER TREATMENT IS NOT NEEDED. (a) A system owner or operator shall monitor at the frequency specified below in cases where the department specifies maximum permissible source water levels under s. NR 809.544 (2) (d) or determines that the system owner or operator is not required to install source water treatment under s. NR 809.544 (2) (b).

1. An owner or operator of a water system using only groundwater shall collect samples once during the 3-year compliance period in effect when the applicable department determination under par. (a) is made. System owners or operators shall collect samples once during each subsequent compliance period. Triennial samples shall be collected every third calendar year.

2. A water system using surface water, or a combination of surface and groundwater, shall collect samples once during each calendar year, the first annual monitoring period to begin during the year in which the applicable department determination is made under sub. (4)(a).

(b) A system owner or operator is not required to conduct source water sampling for lead or copper, or both, if the system meets the action level for the specific contaminant in tap water samples during the entire source water sampling period applicable to the system under par. (a) 1. or 2.

(5) REDUCED MONITORING FREQUENCY. (a) A water system using only groundwater may reduce the monitoring frequency for lead and copper in source water to once during each compliance cycle provided that the samples are collected no later than every ninth calendar year and if the system meets one of the following criteria:

1. The system demonstrates that the finished drinking water entering the distribution system has been maintained below the maximum permissible lead and copper concentrations specified by the department in s. NR 809.544 (2) (d) during at least 3 consecutive compliance periods under sub. (4) (a).

2. The department has determined that source water treatment is not needed and the system demonstrates that, during at least 3 consecutive compliance periods in which sampling was conducted under sub. (4) (a), the concentration of lead in source water was less than or equal to 0.005 mg/L and the concentration of copper in source water was less than or equal to 0.65 mg/L.

(b) A water system using surface water, or a combination of surface water and groundwater may reduce the monitoring frequency in sub. (4)(a) to once during each compliance cycle provided that the samples are collected no later than every ninth calendar year and if the system meets one of the following criteria:

1. The system demonstrates that finished drinking water entering the distribution system has been maintained below the maximum permissible lead and copper concentrations specified by the department in s. NR 809.544 (2) (d) for at least 3 consecutive years.

2. The department has determined that source water treatment is not needed and the system demonstrates that, during at least 3 consecutive years, the concentration of lead in source water was less than or equal to 0.005 mg/L and the concentration of copper in source water was less than or equal to 0.65 mg/L.

(c) A water system that uses a new source of water is not eligible for reduced monitoring for lead or copper, or both, until concentrations in samples collected from the

new source during 3 consecutive monitoring periods are below the maximum permissible lead and copper concentrations specified by the department in s. NR 809.544 (1) (e).

NR 809.55 Reporting requirements for lead and copper. All water system owners or operators shall report all of the following information to the department in accordance with this section:

(1) REPORTING REQUIREMENTS FOR TAP WATER MONITORING FOR LEAD AND COPPER AND FOR WATER QUALITY PARAMETER MONITORING. (a) All lead samples that are detected shall be quantified. Any sample below the method detection limit shall be calculated at zero for the purposes of determining compliance with s. NR 809.541 (3) (c).

(b) All copper samples that are detected shall be quantified. Any sample below the method detection limit shall be calculated as zero for the purposes of determining compliance with s. NR 809.541 (3) (c).

(c) Except as provided in subd. 8., a water system owner or operator shall report the following information for all tap water samples specified in s. NR 809.547 and for all water quality parameter samples specified in s. NR 809.548 within the first 10 days following the end of each applicable monitoring period specified in ss. NR 809.547, 809.548 and 809.549, i. e., 6 months, annually, or every 3 years:

1. The results of all tap samples for lead and copper including the location of each site and the criteria under s. NR 809.547 (1) (c), (d), (e), (f) or (g) under which the site was selected for the system's sampling pool. For monitoring periods with a duration less than six months, the end of the monitoring period is the last date samples can be collected during that period as specified in ss. NR 809.547 and 809.548.

2. Documentation for each tap water lead or copper sample for which the water system requests invalidation pursuant to s. NR 809.547 (6) (b).

3. At a time specified by the department, or if no specific time is designated by the department, then as early is possible prior to the addition of a new source or any long-term change in water treatment, a water system deemed to have optimized corrosion control under s. NR 809.542(2)(c), a water system subject to reduced monitoring pursuant to s. NR 809.547(4)(d), or a water system subject to a monitoring waiver pursuant to s. NR 809.547(7) shall submit written documentation to the department describing the change or addition. The department must review and approve the addition of a new source or long-term change in treatment before it is implemented by the water system. Examples of long-term treatment changes include the addition of a new treatment process or modification of an existing treatment process. Examples of modifications include switching secondary disinfectants, switching coagulants, e.g., alum to ferric chloride, and switching corrosion inhibitor products, e.g., orthophosphate to blended phosphate. Long-term changes may include dose changes to existing chemicals if the system is planning long-term changes to its finished water pH or residual inhibitor concentration. Long-term treatment changes may not include chemical dose fluctuations associated with daily raw water quality changes.

4. The 90th percentile lead and copper concentrations measured from among all lead and copper tap water samples collected during each monitoring period, calculated in accordance with s. NR 809.541 (3) (c), unless the department calculates the system's 90th percentile lead and copper levels under sub. (8).

5. With the exception of initial tap sampling conducted pursuant to s. NR 809.547 (4) (a), the system owner or operator shall designate any site which was not sampled during

previous monitoring periods, and include an explanation of why sampling sites have changed;

6. The results of all tap samples for pH and, where applicable, alkalinity, calcium, conductivity, temperature and orthophosphate or silica collected under s. NR 809.548 (2) to (5);

7. The results of all samples collected at the entry points to the distribution system for applicable water quality parameters under s. NR 809.548 (2) to (5).

8. A water system owner or operator shall report the results of all water quality parameter samples collected under s. NR 809.548 (3) to (6) during each 6-month monitoring period specified in s. NR 809.548 (4) within the first 10 days following the end of the monitoring period unless the department has specified a more frequent reporting requirement.

(d) For the owner or operator of a non-transient non-community water system, or the owner or operator of a community water system meeting the criteria of s. NR 809.546 (3) (g) 1. and 2., that does not have enough taps that can provide first-draw samples, the system owner or operator shall complete one of the following:

1. Provide written documentation to the department identifying standing times and locations for enough non-first-draw samples to make up its sampling pool under s. NR 809.547 (1) by the start of the first applicable monitoring period under s. NR 809.547 (4) that commences after April 11, 2000, unless the department has waived prior departmental approval of non-first-draw sample sites selected by the system pursuant to s. NR 809.547 (2) (e).

2. If the department has waived prior approval of non-first-draw sample sites selected by the system, identify, in writing, each site that did not meet the 6-hour minimum standing time and the length of standing time for that particular substitute sample collected pursuant to s. NR 809.547 (2) (e) and include this information with the lead and copper tap sample results required to be submitted pursuant to par. (c) 1.

(e) No later than 60 days after the addition of a new source or any change in water treatment, unless the department requires earlier notification, a water system deemed to have optimized corrosion control under s. NR 809.542 (2) (c), a water system subject to reduced monitoring pursuant to s. NR 809.547 (4) (d), or a water system subject to a monitoring waiver pursuant to s. NR 809.547 (7), shall send written documentation to the department describing the change.

Note: In those instances where prior department approval of the treatment change or new source is not required, the water system owners or operators are encouraged to provide the notification to the department beforehand to minimize the risk the treatment change or new source will adversely affect optimal corrosion control.

(f) The owner or operator of any small water system applying for a monitoring waiver under s. NR 809.547 (7) or subject to a waiver granted pursuant to s. NR 809.547 (7) (c), shall provide the following information to the department in writing by the specified deadline:

1. By the start of the first applicable monitoring period in s. NR 809.547 (4), the owner or operator of any small water system applying for a monitoring waiver shall provide the documentation required to demonstrate that it meets the waiver criteria of s. NR 809.547 (7) (a) and (b).

2. No later than 9 years after the monitoring previously conducted pursuant to s. NR 809.547 (7) (b) or (d) 1., the owner or operator of each small water system desiring to maintain its monitoring waiver shall provide the information required by s. NR 809.547 (7) (d) 1. and 2.

3. No later than 60 days after it becomes aware that it is no longer free of lead-containing or copper-containing material, as appropriate, the owner or operator of each small water system with a monitoring waiver shall provide written notification to the department, setting forth the circumstances resulting in the lead-containing and copper-containing materials being introduced into the system and what corrective action, if any, the system plans to remove these materials.

4. The owner or operator of any small water system with a waiver granted prior to April 11, 2000 and that has not previously met the requirements of s. NR 809.547 (7) (b) shall provide the information required by that paragraph as required by the department.

(g) Each groundwater system that limits water quality parameter monitoring to a subset of entry points under s. NR 809.548 (3) (c) shall provide, by the commencement of the monitoring, written correspondence to the department that identifies the selected entry points and includes information sufficient to demonstrate that the sites are representative of water quality and treatment conditions throughout the system.

(2) SOURCE WATER MONITORING REPORTING REQUIREMENTS. (a) A water system owner or operator shall report the sampling results for all source water samples collected in accordance with s. NR 809.549 within the first 10 days following the end of each source water monitoring period, i.e., annually, per compliance period, per compliance cycle specified in s. NR 809.549.

(b) With the exception of the first round of source water sampling conducted pursuant to s. NR 809.549 (2), the system owner or operator shall specify any site which was not sampled during previous monitoring periods, and include an explanation of why the sampling point has changed.

(3) CORROSION CONTROL TREATMENT REPORTING REQUIREMENTS. By the applicable dates under s. NR 809.542, system owners or operators shall report the following information:

(a) For owners or operators of systems demonstrating that they have already optimized corrosion control, information required in s. NR 809.542 (2) (b) or (c).

(b) For owners or operators of systems required to optimize corrosion control, their recommendation regarding optimal corrosion control treatment under s. NR 809.543 (1).

(c) For owners or operators of systems required to evaluate the effectiveness of corrosion control treatments under s. NR 809.543 (3), the information required by that section.

(d) For owners or operators of systems required to install optimal corrosion control approved by the department under s. NR 809.543 (4), a letter certifying that the system owner or operator has completed installing that treatment.

(4) SOURCE WATER TREATMENT REPORTING REQUIREMENTS. By the applicable dates in s. NR 809.544, system owners or operators shall provide the following information to the department:

(a) If required under s. NR 809.544 (2) (a), their recommendation regarding source water treatment;

(b) For system owners or operators required to install source water treatment under s. NR 809.544 (2) (b), a letter certifying that the system owner or operator has completed installing the treatment approved by the department within 24 months after the department-approved the treatment.

(5) LEAD SERVICE LINE REPLACEMENT REPORTING REQUIREMENTS. System owners or operators shall report the following information to the department to demonstrate compliance with the requirements of s. NR 809.545:

(a) No later than 12 months after the end of a monitoring period in which a system exceeds the lead action level in sampling referred to in s. NR 809.545 (1), the system must submit written documentation to the department of the material evaluation conducted as required in s. NR 809.547 (1), identify the initial number of lead service lines in its distribution system at the time the system exceeded the lead action level, and provide the system's schedule for annually replacing at least 7 % of the initial number of lead service lines in its distribution system.

(b) No later than 12 months after the end of a monitoring period in which a system exceeds the lead action level in sampling referred to in s. NR 809.545 (1), and every 12 months thereafter, the system shall demonstrate to the department in writing that the system has done one of the following:

1. Replaced in the previous 12 months at least 7% of the initial lead service lines, or a greater number of lines specified by the department under s. NR 809.545 (6), in its distribution system.

2. Conducted sampling which demonstrates that the lead concentration in all service line samples from an individual line, taken pursuant to s. NR 809.547 (2) (cm), is less than or equal to 0.015 mg/L. In such cases, the total number of lines replaced or which meet the criteria in s. NR 809.545(3), or both, shall equal at least 7 % of the initial number of lead lines identified under sub. (5)(a), or the percentage specified by the department under s. NR 809.545 (5).

(c) The annual letter submitted to the department under par. (b) shall contain all of the following information:

1. The number of lead service lines scheduled to be replaced during the previous year of the system's replacement schedule.

2. The number and location of each lead service line replaced during the previous year of the system's replacement schedule.

3. If measured, the water lead concentration and location of each lead service line sampled, the sampling method and the date of sampling.

(d) Any system which collects lead service line samples following partial lead service line replacement required by s. NR 809.545 shall report the results to the department within the first 10 days of the month following the month in which the system receives the laboratory results, or as specified by the department. The department may waive this requirement to report these monitoring results. Systems shall also report any additional information as specified by the department, and in a time and manner prescribed by the department, to verify that all partial lead service line replacement activities have taken place.

(6) PUBLIC EDUCATION PROGRAM REPORTING REQUIREMENTS. By December 31st of each year, any water system that is subject to the public education requirements in s. NR

809.546 shall submit a letter to the department demonstrating that the system owner or operator has delivered the public education materials that meet the content requirements in s. NR 809.546 (1) and (2) and the delivery requirements in s. NR 809.546 (3). This information shall include a list of all the newspapers, radio stations, television stations, facilities and organizations to which the system owner or operator delivered public education materials during the previous year. The water system owner or operator shall submit the letter required by this subsection annually for as long as the system exceeds the lead action level.

(a) Any water system that is subject to the public education requirements in s. NR 809.546 shall, within ten days after the end of each period in which the system is required to perform public education in accordance with s. NR 809.546 (3), send written documentation to the department that contains all of the following:

1. A demonstration that the system has delivered the public education materials that meet the content requirements in s. NR 809.546 (1) and the delivery requirements in s. NR 809.546 (3).

2. A list of all the newspapers, radio stations, television stations, and facilities and organizations to which the system delivered public education materials during the period in which the system was required to perform public education tasks.

(b) Unless required by the department, the owner or operator of a system that previously has submitted the information required by par. (a) 2. is not required to resubmit the information required by par. (a) 2., as long as there have been no changes in the distribution list and the system certifies that the public education materials were distributed to the same list submitted previously.

(c) No later than 3 months following the end of the monitoring period, each system shall mail a sample copy of the consumer notification of tap results to the department along with a certification that the notification has been distributed in a manner consistent with the requirements of s. NR 809.546 (4)

(7) REPORTING OF ADDITIONAL MONITORING DATA. Any system owner or operator that collects sampling data in addition to that required by this subchapter shall report the results to the department within the first 10 days following the end of the applicable monitoring period under ss. NR 809.547, 809.548 and 809.549 during which the samples are collected.

(8) REPORTING OF 90TH PERCENTILE LEAD AND COPPER CONCENTRATIONS WHERE THE DEPARTMENT CALCULATES A SYSTEM'S 90TH PERCENTILE CONCENTRATIONS. The owner or operator of a water system is not required to report the 90th percentile lead and copper concentrations measured from among all lead and copper tap water samples collected during each monitoring period, as required by sub. (1) (c) 4. if any of the following are met:

(a) The department has previously notified the water system that it will calculate the water system's 90th percentile lead and copper concentrations, based on the lead and copper tap results submitted pursuant to par. (b) 1., and has specified a date before the end of the applicable monitoring period by which the system shall provide the results of lead and copper tap water samples.

(b) The system owner or operator has provided all of the following information to the department by the date specified in par. (a):

1. The results of all tap samples for lead and copper including the location of each site and the criteria under s. NR 809.547 (1) (c), (d), (e), (f) or (g) under which the site was selected for the system's sampling pool, pursuant to sub. (1) (c) 1.

2. An identification of sampling sites utilized during the current monitoring period that were not sampled during previous monitoring periods, and an explanation why sampling sites have changed.

(c) The department has provided the results of the 90th percentile lead and copper calculations, in writing, to the water system before the end of the monitoring period.

Subchapter III — Maximum Contaminant Levels, Maximum Residual Disinfectant Levels, Monitoring, Analytical Requirements and Control of Disinfection Byproducts, Disinfection Residuals and Stage 1 and Stage 2 DBP

NR 809.561 Maximum residual disinfectant level goals (MRDLGs), and maximum contaminant levels (MCLs) for disinfection byproducts, maximum residual disinfectant levels (MRDLs) and best available treatment.

(1) MAXIMUM RESIDUAL DISINFECTANT LEVEL GOALS. MRDLGs for disinfectants are as follows:

Disinfectant residual	MRDLG (mg/L)
Chlorine.....	4 (as Cl_2)
Chloramines	4 (as Cl_2)
Chlorine dioxide.....	0.8 (as ClO_2)

(2) MAXIMUM CONTAMINANT LEVELS. The maximum contaminant levels (MCLs) for disinfection byproducts are as follows:

Disinfection byproduct (mg/L)	MCL
Total trihalomethanes (TTHM).....	0.080
Haloacetic acids (five) (HAA5)	0.060
Bromate.....	0.010
Chlorite	1.0

(3) MAXIMUM RESIDUAL DISINFECTANT LEVELS. (a) The maximum residual disinfectant levels (MRDLs) for disinfectants are as follows:

Residual Disinfectants	MRDL (mg/L)
Chlorine.....	4.0 (as $C1_2$)
Chloramines	4.0 (as $C1_2$)
Chlorine dioxide.....	0.8 (as ClO_2)

(b) Other means available for achieving compliance with the maximum residual disinfectant levels identified in this subsection are to control treatment processes to reduce disinfectant demand and to control disinfection treatment processes to reduce disinfectant levels.

(4) BEST AVAILABLE TREATMENT. The department, pursuant to section 1412 of the Safe Drinking Water Act and related regulations applicable to public water systems, identifies the following as the best available treatment technology, treatment techniques or other means available for achieving compliance with the maximum contaminant levels for disinfection byproducts identified in sub. (1):

Disinfectant byproduct	**Best available treatment**
TTHM	Enhanced coagulation or enhanced softening or GAC10, with chlorine as the primary and residual disinfectant.
HAA5	Enhanced coagulation or enhanced softening or GAC10, with chlorine as the primary and residual disinfectant.
Bromate	Control of ozone treatment process to reduce production of bromate.
Chlorite	Control of treatment processes to reduce disinfectant demand and control of disinfection treatment processes to reduce disinfectant levels.

(5) ALTERNATIVE TREATMENT. The department may approve the use of alternative treatment not listed in sub. (4), if a public water system owner or operator demonstrates to the department, using pilot studies or other means, that the alternative treatment is sufficient to achieve compliance with the MCLs in sub. (2).

NR 809.562 General requirements for disinfection byproducts and disinfection residuals Stage 1 DBP. (1) GENERAL. The following requirements establish criteria under which community water systems, or CWSs, and nontransient, noncommunity water systems, or NTNCWSs, which add a chemical disinfectant to the water in any part of the drinking water treatment process shall modify their practices to meet MCLs and MRDLs in s. NR 809.561(2) and (3)(a), respectively, and shall meet the treatment technique requirements for disinfection byproduct precursors in s. NR 809.561 (4). Transient noncommunity water systems, or TNCWSs, that use chlorine dioxide as a disinfectant or oxidant shall modify their practices to meet the MRDL for chlorine dioxide in s. NR 809.561(3)(a) according to the criteria established in this section. MCLs have been established for TTHM and HAA5 and treatment technique requirements for disinfection byproduct precursors to limit the levels of known and unknown disinfection byproducts which may have adverse health effects. These disinfection byproducts may include chloroform, bromodichloromethane, dibromochloromethane, bromoform, dichloroacetic acid, and trichloroacetic acid.

(2) COMPLIANCE TIMEFRAMES. Unless otherwise noted, all public drinking water systems shall comply with the requirements of this subchapter as follows:

(a) All systems serving 10,000 or more persons that are CWSs or NTNCWSs and that are supplied by a surface water source or by a groundwater source under the direct influence of surface water shall comply with this subchapter beginning January 1, 2002.

(b) Systems serving fewer than 10,000 persons that are CWSs or NTNCWSs and that are supplied by a surface water source or by a groundwater source under the direct

influence of surface water and all systems using only groundwater not under the direct influence of surface water shall comply with this subchapter beginning January 1, 2004.

(c) Systems serving 10,000 or more persons that are transient NCWSs and use chlorine dioxide as a disinfectant or oxidant and are supplied by a surface water source or by a groundwater source under the direct influence of surface water shall comply with any requirements for chlorine dioxide and chlorite in this subchapter beginning January 1, 2002.

(d) Systems that are transient NCWSs and use chlorine dioxide as a disinfectant or oxidant and that serve fewer than 10,000 persons and are supplied by a surface water source or by a groundwater source under the direct influence of surface water or that are systems using only groundwater not under the direct influence of surface water shall comply with any requirements for chlorine dioxide in this subchapter beginning January 1, 2004.

(e) A consecutive system that does not add a disinfectant but delivers water that has been treated with a primary or residual disinfectant other than ultraviolet light, shall comply with analytical and monitoring requirements for chlorine and chloramines in s. NR 809.565(6)(a) and the compliance requirements in s. NR 809.566(3)(a) beginning April 1, 2009 and shall report monitoring results under s. NR 809.567(3).

(3) OPERATOR CERTIFICATION. Each CWS and NTNCWS regulated under s. NR 809.561 shall be operated by qualified personnel who meet the requirements specified in ch. NR 114, subch. III and are included in a department register of qualified operators.

(4) RESPONSE TO MICROBIOLOGICAL CONTAMINATION. Notwithstanding the MRDLs in s. NR 809.561(3)(a), systems may increase in the distribution system residual disinfectant levels of chlorine or chloramines, but not chlorine dioxide, to a level and for a time necessary to protect public health, to address specific microbiological contamination problems caused by circumstances such as, but not limited to, distribution line breaks, storm run-off events, source water contamination events or cross-connection events.

(5) PUBLIC NOTIFICATION OF MCL OR MRDL VIOLATIONS. The owner or operator of a public water system shall provide public notification in compliance with subch. VII when the MCL or MRDL or disinfectant residual is exceeded.

(6) REQUIRED ADDITIONAL HEALTH INFORMATION. CWSs that detect TTHM above 0.080 mg/l, but are not in violation of the MCL in s. NR 809.561(2), based on an annual average, monitored and calculated under the provisions of s. NR 809.565, shall provide copies of health effects language prescribed in subch. VII and s. NR 809.835 to the users of the CWS in the CCR.

NR 809.563 Analytical requirements for disinfection byproducts and disinfection residuals Stage 1 DBP and Stage 2 DBP. (1) GENERAL. Systems shall use only the analytical methods specified in this section, or otherwise approved by the department or EPA for monitoring under this subchapter, to demonstrate compliance with the requirements of this subchapter.

(2) APPROVED ANALYTICAL METHODS FOR DISINFECTANT RESIDUALS. Systems shall measure residual disinfectant concentrations for total chlorine, free chlorine, combined chlorine (chloramines), and chlorine dioxide by the methods listed in Table R. Systems may also measure residual disinfectant concentrations for chlorine, chloramines and chlorine dioxide by using N,N-diethly-p-phenylenediamine (DPD) colorimetric using a colorimeter as prescribed in the approved methods.

TABLE R
SDWA Approved Methodology for Disinfectant Byproducts and Disinfectant Residuals

Parameter	**Reference (method number)**		
	EPA[1,2]	**Standard Methods[3]**	**ASTM[4]**
Disinfectant Residuals			
Free Chlorine		4500-CL D, 4500-CL F,4500-CL G, 4500-CL H	D 1253-86
Combined Chlorine		4500-CL D,4500-CL F, 4500-CL G	
Total Chlorine		4500-CL D, 4500-CL E, 4500-CL F, 4500-CL G, 4500-CL I	D 1253-86
Chlorine Dioxide		4500-CLO_2 D, 4500-CLO_2 E	

[1] EPA Method 552.1 is in Methods for the Determination of Organic Compounds in Drinking Water-Supplement II, USEPA, August 1992, EPA/600/R-92/129 (available through National Information Technical Service (NTIS), PB92-207703). EPA Methods 502.2, 524.2, 551.1, and 552.2 are in Methods for the Determination of Organic Compounds in Drinking Water-Supplement III, USEPA, August 1995, EPA/600/R-95/131. (available through NTIS, PB95-261616).

[2] EPA Method 300.0 is in Methods for the Determination of Inorganic Substances in Environmental Samples, USEPA, August 1993, EPA/600/R-93/100. (available through NTIS, PB94-121811). EPA Method 300.1is titled USEPA Method 300.1, Determination of Inorganic Anions in Drinking Water by Ion Chromatography, Revision 1.0, USEPA, 1997, EPA/600/R-98/118 (available through NTIS, PB98-169196); also available from: Chemical Exposure Research Branch, Microbiological & Chemical Exposure Assessment Research Division, National Exposure Research Laboratory, U.S. Environmental Protection Agency, Cincinnati, OH 45268,Fax Number: 513-569-7757, Phone number: 513-569-7586.

[3] Standard Methods 4500-Cl D, 4500-Cl E, 4500-Cl F, 4500-Cl G, 4500-Cl H, 4500-Cl I, 4500-ClO_2D, 4500-ClO_2 E, 6251 B, and 5910 B shall be followed in accordance with Standard Methods for the Examination of Water and Wastewater, 19th Edition, American Public Health Association, 1995; copies may be obtained from the American Public Health Association, 1015 Fifteenth Street, NW, Washington, DC 20005. Standard Methods 5310 B, 5310 C, and 5310 D shall be followed in accordance with the Supplement to the 19th Edition of Standard Methods for the Examination of Water and Wastewater, American Public Health Association, 1996; copies may be obtained from the American Public Health Association, 1015 Fifteenth Street, NW, Washington, DC 20005

[4] ASTM Method D 1253-86 shall be followed in accordance with the Annual Book of ASTM Standards, Volume 11.01, American Society for Testing and Materials, 1996

edition; copies may be obtained from the American Society for Testing and Materials, 100 Barr Harbor Drive, West Conshohoken, PA 19428.

(3) APPROVED ANALYTICAL METHODS FOR DISINFECTANT BYPRODUCTS. Systems shall measure disinfection byproducts by the methods, as modified by the footnotes, prescribed in Table S. Samples for TTHM shall be dechlorinated upon collection to prevent further production of trihalomethanes, according to the procedures described in the methods, except acidification is not required if only THMs or TTHMs are to be determined. Samples for maximum TTHM potential may not be dechlorinated or acidified, and shall be held for 7 days at 25° C or above prior to analysis. Samples shall be collected using the containers, preservative and holding times specified in s. NR 809.203(4) Table D.

Table S
Approved Methods for Disinfectant Byproduct Compliance Monitoring

Methodology[2]	**EPA Meth.**	**Standard Method**	**Byproduct measured**[1]			
			TTHM	HAA5	Chlorite[4]	Bromate
P&T/GC/ElCD& PID	502.2		X			
P&T/GC/MS	524.2		X			
LLE/GC/ECD	551.1		X			
LLE/GC/ECD		6251 B		X		
SPE/GC/ECD	552.1			X		
LLE/GC/ECD	552.2			X		
Amperometric Titration[3]		4500-ClO_2E			X	
IC	300.0				X	
IC	300.1				X	X

[1] X indicates method is approved for measuring specified disinfection byproduct.
[2] P&T = purge and trap; GC = gas chromatography; ElCD = electrolytic conductivity detector; PID = photoionization detector; MS = mass spectrometer; LLE = liquid/liquid extraction; ECD = electron capture detector; SPE = solid phase extractor; IC = ion chromatography.
[3] If TTHMs are the only analytes being measured in the sample, then a PID is not required.
[4] Amperometric titration may be used for routine daily monitoring of chlorite at the entrance to the distribution system, as prescribed in s. NR 809.565 (5) (a) 1. Ion chromatography shall be used for routine monthly monitoring of chlorite and additional monitoring of chlorite in the distribution system, as prescribed in s. NR 809.565 (5) (a) 2. and 3.

(4) LABORATORY CERTIFICATION FOR DISINFECTANT BYPRODUCTS. Laboratories that are certified by the department or EPA shall conduct the analysis under this section for disinfection byproducts.

(a) To receive certification to conduct analyses for the contaminants in this subchapter, a laboratory shall carry out annual analyses of performance evaluation samples approved by the department or EPA.

(b) When analyzing performance evaluation samples, the laboratory shall achieve quantitative results within the acceptance limit on a minimum of 80% of the analytes included in each PE sample.

(c) The acceptance limit shall be the 95% confidence interval calculated around the mean of the PE study data between a maximum and minimum acceptance limit of +/-50% and +/-15% of the study mean.

(d) Beginning on April 1, 2007, laboratories must achieve quantitative results on the PE sample analyses that are within the following acceptance limits:

DBP	**Acceptance limits (percent of true value)**	**Comments**
TTHM		
Chloroform	±20	Laboratory must meet all 4 individual THM acceptance limits in order to successfully pass a PE sample for TTHM
Bromodichloromethane	±20	
Dibromochloromethane	±20	
Bromoform	±20	
HAA5		
Monochloroacetic Acid	±40	Laboratory must meet the acceptance limits for 4 out of 5 of the HAA5 compounds in order to successfully pass a PE sample for HAA5
Dichloroacetic Acid	±40	
Trichloroacetic Acid	±40	
Monobromoacetic Acid	±40	
Dibromoacetic Acid	±40	
Chlorite	±30	
Bromate	±30	

(e) Beginning on April 1, 2007, laboratories must report quantitative data for concentrations as low as the ones listed in the following table for all DBP samples analyzed for compliance:

DBP	**Minimum reporting level (mg/L)**[1]	**Comments**
TTHM[2]		
Chloroform	0.0010	
Bromodichloromethane	0.0010	
Dibromochloromethane	0.0010	
Bromoform	0.0010	
HAA5[2]		
Monochloroacetic Acid	0.0020	
Dichloroacetic Acid	0.0010	
Trichloroacetic Acid	0.0010	
Monobromoacetic Acid	0.0010	
Dibromoacetic Acid	0.0010	
Chlorite	0.020	Applicable to monitoring as prescribed in s. NR 809.565(5)(a)4.
Bromate	0.0050 or 0.0010	Laboratories that use EPA Methods 317.0 Revision 2.0, 326.0 or 321.8 must meet a 0.0010 mg/L MRL for bromate.

[1]The calibration curve must encompass the regulatory minimum reporting level (MRL) concentration. Data may be reported for concentrations lower than the regulatory MRL as long as the precision and accuracy criteria are met by analyzing an MRL check standard at the lowest reporting limit chosen by the laboratory. The laboratory must verify the accuracy of the calibration curve at the MRL concentration by analyzing an MRL check standard with a concentration less than or equal to 110% of the MRL with each batch of samples. The measured concentration for the MRL check standard must be ±50% of the expected value, if any field sample in the batch has a concentration less than 5 times the regulatory MRL. Method requirements to analyze higher concentration check standards and meet tighter acceptance criteria for them must be met in addition to the MRL check standard requirement.

[2]When adding the individual trihalomethane or haloacetic acid concentrations to calculate the TTHM or HAA5 concentrations, respectively, a zero is used for any analytical result that is less than the MRL concentration for that DBP, unless otherwise specified by the department.

(5) APPROVAL OF PERSONS MEASURING DISINFECTANT RESIDUAL CONCENTRATIONS. A person approved by the department or EPA shall measure residual disinfectant concentration.

(6) ANALYTICAL METHODS FOR ADDITIONAL REQUIRED PARAMETERS. Systems required to analyze for additional parameters not included in subs. (3) and (6) shall have these parameters analyzed by a person approved by the department or EPA using the following methods:

(a) *Alkalinity.* For measuring alkalinity use the methods allowed in s. NR 809.113 Table A.

(b) *Bromide.* For measuring bromide use EPA Method 300.0 or EPA Method 300.1.

(c) *Total Organic Carbon (TOC).* For measuring total organic carbon, use Standard Method 5310 B (High-Temperature Combustion Method) or Standard Method 5310 C (Persulfate-Ultraviolet or Heated-Persulfate Oxidation Method) or Standard Method 5310 D (Wet-Oxidation Method).

1. TOC samples may not be filtered prior to analysis.

2. TOC samples shall either be analyzed or shall be acidified to achieve pH less than 2.0 by minimal addition of phosphoric or sulfuric acid as soon as practical after sampling, not to exceed 24 hours.

3. Acidified TOC samples shall be analyzed within 28 days.

(d) *Specific ultraviolet absorbance (SUVA).* SUVA is equal to the UV absorption at 254nm (UV_{254}) measured in m^{-1} divided by the dissolved organic carbon (DOC) concentration measured as mg/L.

1. In order to determine SUVA, it is necessary to separately measure UV_{254} and DOC.

2. When determining SUVA, systems shall use the methods stipulated in par. (e) to measure DOC and the method stipulated in par. (f) to measure UV_{254} SUVA shall be determined on water prior to the addition of disinfectants or oxidants, or both, by the system.

3. DOC and UV_{254} samples used to determine a SUVA value shall be taken at the same time and at the same location.

(e) *Dissolved organic carbon (DOC).* For measuring dissolved organic carbon, use Standard Method 5310 B (High-Temperature Combustion Method) or Standard Method 5310 C (Persulfate-Ultraviolet or Heated-Persulfate Oxidation Method) or Standard Method 5310 D (Wet-Oxidation Method). Prior to analysis, DOC samples shall be filtered through a 0.45 µm pore-diameter filter. Water passed through the filter prior to filtration of the sample shall serve as the filtered blank. This filtered blank shall be analyzed using procedures identical to those used for analysis of the samples and shall meet the following criteria: DOC < 0.5 mg/L. DOC samples shall be filtered through the 0.45 µm pore-diameter filter prior to acidification. DOC samples shall either be analyzed or shall be acidified to achieve pH less than 2.0 by minimal addition of phosphoric or

sulfuric acid as soon as practical after sampling, not to exceed 48 hours. Acidified DOC samples shall be analyzed within 28 days.

(f) *Ultraviolet absorption at 254 nm (UV_{254}).* For measuring ultraviolet absorption at 254 nm, use Method 5910 B (Ultraviolet Absorption Method). UV absorption shall be measured at 253.7 nm (may be rounded off to 254 nm). Prior to analysis, UV_{254} samples shall be filtered through a 0.45 µm pore-diameter filter. The pH of UV_{254} samples may not be adjusted. Samples shall be analyzed as soon as practical after sampling, not to exceed 48 hours.

(g) *pH.* For measuring pH, use any method allowed in s. NR 809.113(1) Table A.

NR 809.565 Monitoring requirements for disinfection byproducts and disinfection residuals Stage 1 DBP. (1) GENERAL REQUIREMENTS. General requirements under this subchapter for analytical requirements, determining maximum contaminant levels, conducting monitoring and control of disinfection byproducts are as follows:

(a) Systems shall take all samples during normal operating conditions.

(b) Systems may consider multiple wells drawing water from a single aquifer as one treatment plant for determining the minimum number of TTHM and HAA5 samples required, on a case-by-case basis with department approval.

(c) Failure to monitor in accordance with the monitoring plan required under sub. (8) is a monitoring violation.

(d) Failure to monitor shall be treated as a violation for the entire period covered by the annual average where compliance is based on a running annual average of monthly or quarterly samples or averages and the system's failure to monitor makes it impossible to determine compliance with MCLs or MRDLs.

(e) Systems may use only data collected under the provisions of this subchapter.

(2) MONITORING FREQUENCY AND LOCATION FOR TTHMS AND HAA5S. Systems shall monitor at the following frequency and locations for TTHMs and HAA5 disinfection byproducts:

(a) Systems serving at least 10,000 persons which are supplied by a surface water source or by a groundwater source under the direct influence of surface water shall collect and have analyzed 4 water samples per quarter per treatment plant.

1. At least 25% of all samples collected each quarter at each treatment plant shall be at locations representing the maximum residence time in the system.

2. The remaining samples shall be taken in the distribution system at locations representing at least average residence time in the system and representative of the entire distribution system, taking into account the number of people served, different sources of water and different treatment methods.

(b) Systems serving from 500 to 9,999 persons which are supplied by a surface water source or by a groundwater source under the direct influence of surface water shall collect and have analyzed one water sample per quarter per treatment plant. The samples shall be collected at locations representing the maximum residence time of water in the system.

(c) Systems serving fewer than 500 people which are supplied by a surface water source or by a groundwater source under the direct influence of surface water shall collect one sample per treatment plant annually. The samples shall be collected during

the month with the warmest water temperature at locations representing the maximum residence time in the system.

(d) Systems using chemical disinfection, using only groundwater not under the direct influence of surface water, and serving at least 10,000 people shall collect one sample per treatment plant per quarter. The sample or samples shall be collected at the location representing the maximum residence time in the system.

(e) Systems using chemical disinfection, using only groundwater not under the direct influence of surface water, and serving fewer than 10,000 people shall collect one sample per treatment plant annually. The sample shall be collected during the month with the warmest water temperature, at locations representing the maximum residence time, in the system.

(3) MONITORING AFTER EXCEEDING AN MCL. If a sample or the average of samples, if more than one sample is taken, exceeds the MCL for TTHMs or HAA5 disinfection byproducts, the system shall collect quarterly samples until the system meets the requirements of reduced monitoring in sub. (4).

(4) REDUCED MONITORING. Systems may reduce monitoring for TTHMs and HAA5s as follows, except as otherwise provided:

(a) Surface water systems or groundwater systems under the direct influence of surface water with an annual average of TTHM of ≤0.040 mg/L and HAA5 ≤0.030 mg/L with an annual average TOC concentration of ≤ 4.0 mg/L, before any treatment may reduce monitoring to the following:

1. A system serving at least 10,000 people may reduce monitoring to one sample per quarter per treatment plant so long as the sample is taken at a location representing maximum residence time in the system.

2. A system serving from 500 to 9,999 people may reduce monitoring to one sample per year per treatment plant so long as the sample is taken at a location representing maximum residence time in the system during the month of warmest water temperature.

3. A system serving less than 500 people may not reduce monitoring to less than one sample during the month of warmest water temperature per treatment plant per year.

(b) Systems using only groundwater not under the direct influence of surface water using chemical disinfection with an annual average of TTHM of ≤ 0.040 mg/L and HAA5 ≤ 0.030 mg/L may reduce sampling to the following:

1. Systems serving at least 10,000 people may reduce monitoring to one sample per year per treatment plant during the month of warmest water temperature at a location representing maximum residence time in the system.

2. Systems serving fewer than 10,000 people may reduce monitoring to one sample per treatment plant per 3 year monitoring cycle during the month of warmest water temperature at a location representing maximum residence time in the system. The reduced monitoring will begin on January 1 following the quarter in which the system first qualifies for reduced monitoring.

(c) Systems on a reduced monitoring schedule may remain on that reduced schedule as long as the average of all samples taken in the year, for systems which shall monitor quarterly, or the result of the sample, for systems which shall monitor no more frequently than annually, is no more than 0.060 mg/L and 0.045 mg/L for TTHMs and HAA5, respectively. Systems that do not meet these levels shall resume monitoring at the

frequency identified in sub. (2) in the quarter immediately following the quarter in which the system exceeds 0.060 mg/L and 0.045 mg/L for TTHMs and HAA5, respectively.

(d) The department may return a system to routine monitoring at the department's discretion.

(5) MONITORING FREQUENCY AND LOCATION FOR CHLORITE AND BROMATE. Systems shall monitor at the following frequency and locations for chlorite and bromate disinfection byproducts:

(a) *Chlorite.* Community and nontransient noncommunity water systems using chlorine dioxide, for disinfection or oxidation, shall conduct monitoring for chlorite as follows:

1. Routine daily monitoring. Systems shall take daily samples at the entrance to the distribution system. For any daily sample that exceeds the chlorite MCL, the system shall take additional samples in the distribution system the following day at the locations required by subd. 3. in addition to the sample required at the entrance to the distribution system.

2. Routine monthly monitoring. Systems shall take a 3-sample set each month in the distribution system. The system shall take one sample at each of the following locations: near the first customer, at a location representative of average residence time, and at a location reflecting maximum residence time in the distribution system. Any additional routine sampling shall be conducted in the same manner, as 3-sample sets, at the specified locations. The system may use the results of additional monitoring conducted under subd. 3. to meet the requirement for monitoring in this subdivision.

3. Additional monitoring. On each day following a routine sample monitoring result that exceeds the chlorite MCL at the entrance to the distribution system, the system shall take 3 chlorite distribution system samples at the following locations: as close to the first customer as possible, in a location representative of average residence time, and as close to the end of the distribution system as possible, reflecting maximum residence time in the distribution system.

4. Reduced monitoring. Chlorite monitoring at the entrance to the distribution system required under subd. 1 may not be reduced. Chlorite monitoring in the distribution system required under subd. 2 may be reduced to one 3-sample set per quarter after one year of monitoring where no individual chlorite sample taken in the distribution system under subd. 2. has exceeded the chlorite MCL and the system has not been required to conduct monitoring under subd. 3. The system may remain on the reduced monitoring schedule until either any of the 3 individual chlorite samples taken quarterly in the distribution system under subd. 2. exceeds the chlorite MCL or the system is required to conduct monitoring under subd. 3., at which time the system shall revert to routine monitoring.

(b) *Bromate.* 1. Routine monitoring. Community and nontransient noncommunity systems using ozone, for disinfection or oxidation, shall take one sample per month for each treatment plant in the system using ozone. Systems shall take samples monthly at the entrance to the distribution system while the ozonation system is operating under normal conditions.

2. Reduced monitoring. Systems required to analyze for bromate may reduce monitoring from monthly to once per quarter, if the system demonstrates that the average source water bromide concentration is less than 0.05 mg/L based upon representative

monthly bromide measurements for one year. The system shall continue bromide monitoring to remain on reduced bromate monitoring. The system may remain on reduced bromate monitoring until the running annual average source water bromide concentration, computed quarterly, is 0.05 mg/L or greater based upon representative monthly measurements. If the running annual average source water bromide concentration is equal to or greater than 0.05 mg/L, the system shall resume routine monitoring required by subd. 1.

(6) MONITORING FREQUENCY AND LOCATION FOR DISINFECTANT RESIDUALS. Systems shall monitor at the following frequency and locations for disinfectant residuals:

(a) *Chlorine and chloramines.* Systems shall perform routine monitoring by measuring the residual disinfectant level at the same points in the distribution system and at the same time as total coliforms are sampled, as specified in s. NR 809.31. Surface water systems may use the results of residual disinfectant concentration sampling conducted under s. NR 810.38 (1) (h) for unfiltered systems or s. NR 810.38 (2) (d) for systems that filter, in lieu of taking separate samples. Monitoring may not be reduced.

(b) *Chlorine dioxide.* 1. Routine monitoring. Community, nontransient noncommunity, and transient noncommunity water systems that use chlorine dioxide for disinfection or oxidation shall take daily samples at the entrance to the distribution system. For any daily sample that exceeds the MRDL, the system shall take samples in the distribution system the following day at the locations required by subd. 2., in addition to the sample required at the entrance to the distribution system.

2. Additional monitoring. On each day following a routine sample monitoring result that exceeds the MRDL, the system shall take 3 chlorine dioxide distribution system samples. If chlorine dioxide or chloramines are used to maintain a disinfectant residual in the distribution system, or if chlorine is used to maintain a disinfectant residual in the distribution system and there are no disinfection addition points after the entrance to the distribution system, i.e., no booster chlorination, the system shall take 3 samples as close to the first customer as possible, at intervals of at least 6 hours. If chlorine is used to maintain a disinfectant residual in the distribution system and there are one or more disinfection addition points after the entrance to the distribution system, i.e., booster chlorination, the system shall take one sample at each of the following locations: as close to the first customer as possible, in a location representative of average residence time, and as close to the end of the distribution system as possible, reflecting maximum residence time in the distribution system.

3. Reduced monitoring. Chlorine dioxide monitoring may not be reduced.

(7) MONITORING FREQUENCY AND LOCATION FOR DISINFECTANT BYPRODUCT PRECURSORS. Systems shall monitor at the following frequency and locations for disinfection byproduct precursors (DBPP):

(a) *Routine monitoring.* 1. Systems which use conventional filtration treatment and are supplied by a surface water source or by a groundwater source under the direct influence of surface water shall monitor each treatment plant monthly for TOC no later than the point of combined filter effluent turbidity monitoring and representative of the treated water.

2. All systems required to monitor under subd. 1. shall also monitor for TOC in the source water prior to any treatment at the same time as monitoring for TOC in the treated water.

Note: These samples, source water and treated water, are referred to as paired samples.

3. At the same time as the source water sample is taken, all systems shall monitor for alkalinity in the source water prior to any treatment. Systems shall take one paired sample and one source water alkalinity sample per month per plant at a time representative of normal operating conditions and influent water quality.

(b) *Reduced monitoring.* Systems which use conventional filtration treatment and are supplied by a surface water source or by a groundwater source under the direct influence of surface water and which have an average treated water TOC of less than 2.0 mg/L for 2 consecutive years, or less than 1.0 mg/L for one year, may reduce monitoring for both TOC and alkalinity to one paired sample and one source water alkalinity sample per plant per quarter. The system shall revert to routine monitoring in the month following the quarter when the annual average treated water TOC $\geq$ 2.0 mg/L.

(8) MONITORING PLANS. Each system required to monitor under this subchapter shall develop and implement a monitoring plan, and shall maintain the plan and make it available for inspection by the department and the general public no later than 30 days following the applicable compliance dates in s. NR 809.562 (2).

(a) Systems which are supplied by a surface water source or by a groundwater source under the direct influence of surface water and which serve more than 3,300 people shall submit a copy of the monitoring plan to the department no later than the date of the first report required under s. NR 809.567. The department may also require any other public water system to submit a monitoring plan. After review, the department may require changes in any plan elements.

(b) The plan shall include at least the following elements:

1. Specific locations and schedules for collecting samples for any parameters included in this subchapter.

2. How the system will calculate compliance with MCLs, MRDLs and treatment techniques.

3. If approved for monitoring as a consecutive system, or if providing water to a consecutive system, under s. NR 809.77, the sampling plan shall reflect the entire distribution system.

NR 809.566 Compliance requirements for disinfection byproducts and disinfection residuals Stage 1 DBP. (1) GENERAL REQUIREMENTS. The general requirements for compliance with this subchapter are as follows:

(a) If compliance is based on a running annual average of monthly or quarterly samples or an annual average and the system fails to monitor for TTHM, HAA5 or bromate, this failure to monitor shall be treated as a monitoring violation for the entire period covered by the annual average.

(b) If compliance is based on a running annual average of monthly or quarterly samples or averages and the system's failure to monitor makes it impossible to determine compliance with MRDLs for chlorine and chloramines, failure to monitor shall be treated as a monitoring violation for the entire period covered by the annual average.

(c) All samples taken and analyzed under the provisions of this subchapter shall be included in determining compliance, even if that number is greater than the minimum required.

(d) If, during the first year of monitoring under s. NR 809.565, any individual quarter's average will cause the running annual average of that system to exceed the MCL, the system is out of compliance at the end of that quarter.

(2) COMPLIANCE REQUIREMENTS FOR DISINFECTION BYPRODUCTS. (a) *TTHMs and HAA5s.* Compliance for TTHMs and HAA5s shall be based one of the following:

1. For systems monitoring quarterly, compliance with MCLs in s. NR 809.561 (3) shall be based on a running annual arithmetic average, computed quarterly, of quarterly arithmetic averages of all samples collected by the system as prescribed by s. NR 809.565 (2) to (3). If the running annual arithmetic average of quarterly averages covering any consecutive 4-quarter period exceeds the MCL, the system is in violation of the MCL and shall notify the public pursuant to subch. VII, in addition to reporting to the department pursuant to s. NR 809.567. If a public water system fails to complete 4 consecutive quarters of monitoring, compliance with the MCL for the last 4-quarter compliance period shall be based on an average of the available data.

2. For systems monitoring less frequently than quarterly, compliance with MCLs in s. NR 809.561 (3) shall be based on an average of samples taken that year under the provisions of s. NR 809.565 (2) to (3). If the average of these samples exceeds the MCL, the system shall increase monitoring to once per quarter per treatment plant and the system is not in violation of the MCL until it has completed one year of quarterly monitoring, unless the result of fewer than 4 quarters of monitoring will cause the running annual average to exceed the MCL, in which case the system is in violation at the end of that quarter. Systems required to increase monitoring frequency to quarterly monitoring shall calculate compliance by including the sample which triggered the increased monitoring plus the following 3 quarters of monitoring.

3. If the running annual arithmetic average of quarterly averages covering any consecutive 4-quarter period exceeds the MCL, the system is in violation of the MCL and shall notify the public pursuant to subch. VII, in addition to reporting to the department pursuant to s. NR 809.567.

(b) *Bromate.* Compliance for bromate shall be based on a running annual arithmetic average, computed quarterly, of monthly samples or, for months in which the system takes more than one sample, the average of all samples taken during the month, collected by the system as prescribed by s. NR 809.565 (4) (b). If the average of samples covering any consecutive 4-quarter period exceeds the MCL, the system is in violation of the MCL and shall notify the public pursuant to subch. VII, in addition to reporting to the department pursuant to s. NR 809.567. If a public water system fails to complete 12 consecutive months of monitoring, compliance with the MCL for the last 4-quarter compliance period shall be based on an average of the available data.

(c) *Chlorite.* Compliance for chlorite shall be based on an arithmetic average of each 3-sample set taken in the distribution system as prescribed by s. NR 809.565 (4) (a) 2. and 3. If the arithmetic average of any 3-sample set exceeds the MCL, the system is in violation of the MCL and shall notify the public pursuant to subch. VII, in addition to reporting to the department pursuant to s. NR 809.567.

(3) COMPLIANCE REQUIREMENTS FOR DISINFECTANT RESIDUALS. (a) *Chlorine and chloramines*. 1. Compliance shall be based on a running annual arithmetic average, computed quarterly, of monthly averages of all samples collected by the system under s. NR 809.565 (5) (a). If the average of quarterly averages covering any consecutive 4-quarter period exceeds the MRDL, the system is in violation of the MRDL and shall notify the public pursuant to subch. VII, in addition to reporting to the department pursuant to s. NR 809.567.

2. In cases where systems switch between the use of chlorine and chloramines for residual disinfection during the year, compliance shall be determined by including together all monitoring results of both chlorine and chloramines in calculating compliance. Reports submitted pursuant to s. NR 809.567 shall clearly indicate which residual disinfectant was analyzed for each sample.

(b) *Chlorine dioxide.* Compliance shall be based on consecutive daily samples collected by the system under s. NR 809.565 (5) (b).

1. A system has an acute violation of the MRDL for chlorine dioxide when any daily sample taken at the entrance to the distribution system exceeds the MRDL and on the following day one or more of the 3 samples taken in the distribution system exceeds the MRDL. If both exceedances occur, the system is in violation of the MRDL and shall take immediate corrective action to lower the level of chlorine dioxide below the MRDL and shall notify the public pursuant to the procedures for acute health risks in s. NR 809.951. Failure to take samples in the distribution system the day following an exceedance of the chlorine dioxide MRDL at the entrance to the distribution system shall also be considered an MRDL violation and the system shall notify the public of the violation in accordance with the provisions for acute violations under s. NR 809.951.

2. A system has a nonacute violation for chlorine dioxide when any 2 consecutive daily samples taken at the entrance to the distribution system exceed the MRDL and all distribution system samples taken are below the MRDL. A system with a nonacute violation shall take corrective action to lower the level of chlorine dioxide below the MRDL at the point of sampling and shall notify the public pursuant to the procedures for nonacute health risks in subch. VII. Failure to monitor at the entrance to the distribution system the day following an exceedance of the chlorine dioxide MRDL at the entrance to the distribution system is also an MRDL violation and the system shall notify the public of the violation in accordance with the provisions for nonacute violations under subch. VII.

(4) COMPLIANCE REQUIREMENTS FOR DISINFECTION BYPRODUCT PRECURSORS (DBPP). Compliance with disinfection byproduct precursors shall be determined as specified in s. NR 809.569 (1). Systems may begin monitoring to determine whether Step 1 TOC removals can be met 12 months prior to the compliance date for the system. This monitoring is not required and failure to monitor during this period is not a violation. However, any system that does not monitor during this period, and then determines in the first 12 months after the compliance date that it is not able to meet the Step 1 requirements in s. NR 809.569 (1) (b) and therefore applies for alternate minimum TOC removal (Step 2) requirements, is not eligible for retroactive approval of alternate minimum TOC removal (Step 2) requirements as allowed pursuant to s. NR 809.569 (1) (c) and is in violation. Systems may apply for alternate minimum TOC removal (Step 2) requirements any time after the compliance date. For systems required to meet Step 1

TOC removals, if the value calculated under s. NR 809.569 (3) (a) or (b) is less than 1.00, the system is in violation of the treatment technique requirements and shall notify the public pursuant to subch. VII in addition to reporting to the department pursuant to s. NR 809.567.

NR 809.567 Reporting and recordkeeping requirements for disinfection byproducts and disinfection residuals for Stage 1 DBP. (1) REPORTING REQUIREMENTS. Systems required to sample quarterly or more frequently shall report to the department within 10 days after the end of each quarter in which samples were collected, notwithstanding the provisions of s. NR 809.563. Systems required to sample less frequently than quarterly shall report to the department within 10 days after the end of each monitoring period in which samples were collected.

(2) REPORTING AND RECORDKEEPING REQUIREMENTS FOR DISINFECTION BYPRODUCTS. Systems monitoring for disinfection byproducts shall report the information specified in the following requirements:

(a) Systems monitoring TTHM and HAA5 under the requirements of s. NR 809.565 (2) on a quarterly or more frequent basis shall report all of the following:

1. The number of samples taken during the last quarter.
2. The location, date and result of each sample taken during the last quarter.
3. The arithmetic average of all samples taken in the last quarter.
4. The annual arithmetic average of the quarterly arithmetic averages for the last 4 quarters.
5. Whether the MCL was exceeded, as determined according to s. NR 809.566 (2).

(b) Systems monitoring TTHMs and HAA5s under the requirements of s. NR 809.565 (2) less frequently than quarterly but at least annually shall report all of the following:

1. The number of samples taken during the last year.
2. The location, date and result of each sample taken during the last quarter.
3. The arithmetic average of all samples taken over the last year.
4. Whether the MCL was exceeded, as determined according to s. NR 809.566 (2).

(c) Systems monitoring TTHMs and HAA5s under the requirements of s. NR 809.565 (2) less frequently than annually shall report all of the following:

1. The location, date and result of the last sample taken.
2. Whether the MCL was exceeded, as determined according to s. NR 809.566 (2).

(d) Systems monitoring chlorite under the requirements of s. NR 809.565 (4) (a) shall report all of the following:

1. The number of samples taken each month for the last 3 months.
2. The location, date and result of each sample taken during the last quarter.
3. For each month in the reporting period, the arithmetic average of all samples taken in each 3 sample set collected in the distribution system.
4. Whether, based on s. NR 809.566 (2) (c), the MCL was exceeded, and how many times it was exceeded each month.

(e) Systems monitoring bromate under the requirements of s. NR 809.565 (4) (b) shall report all of the following:

1. The number of samples taken during the last quarter.
2. The location, date and result of each sample taken during the last quarter.

3. The arithmetic average of the monthly arithmetic averages of all samples taken in the last year.

4. Whether the MCL was exceeded, as determined according to s. NR 809.566 (2) (b).

(3) REPORTING AND RECORDKEEPING REQUIREMENTS FOR DISINFECTANTS. Systems monitoring for disinfectants shall report the information specified in the following:

(a) Systems monitoring chlorine or chloramines under the requirements of s. NR 809.565 (5) (a) shall report all of the following:

1. The number of samples taken during each month of the last quarter.

2. The monthly arithmetic average of all samples taken in each month for the last 12 months.

3. The arithmetic average of all monthly averages for the last 12 months.

4. Whether the MRDL was exceeded, as determined according to s. NR 809.566 (3) (a).

(b) Systems monitoring chlorine dioxide under the requirements of s. NR 809.565 (5) (b) shall report all of the following information:

1. The dates, results and locations of samples taken during the last quarter.

2. Whether the MRDL was exceeded, as determined according to s. NR 809.566 (3) (b).

3. Whether the MRDL was exceeded in any 2 consecutive daily samples and whether the resulting violation was acute or nonacute as determined according to s. NR 809.566 (3) (b).

(4) DISINFECTION BYPRODUCT PRECURSORS, ENHANCED COAGULATION OR ENHANCED SOFTENING SYSTEMS. Systems containing disinfection byproduct precursors or using enhanced coagulation or enhanced softening, shall report the information specified in the following:

(a) Systems monitoring monthly or quarterly for TOC under the requirements of s. NR 809.565 (6) and required to meet the enhanced coagulation or enhanced softening requirements in s. NR 809.569 (1) (b) or (c) shall report all of the following:

1. The number of paired samples of source water and treated water, both prior to continuous disinfection, taken during the last quarter.

2. The location, date and result of each paired sample and associated alkalinity taken during the last quarter.

3. For each month in the reporting period that paired samples were taken, the arithmetic average of the percent reduction of TOC for each paired sample and the required TOC percent removal.

4. Calculations for determining compliance with the TOC percent removal requirements, as provided in s. NR 809.569 (3).

5. Whether the system is in compliance with the enhanced coagulation or enhanced softening percent removal requirements in s. NR 809.569 (1) for the last 4 quarters.

(b) Systems monitoring monthly or quarterly for TOC under the requirements of s. NR 809.565 (6) and meeting one or more of the alternative compliance criteria in s. NR 809.569 (2) (b) or (c) shall report all of the following:

1. The alternative compliance criterion that the system is using.

2. The number of paired samples taken during the last quarter.

3. The location, date and result of each paired sample and associated alkalinity taken during the last quarter.

4. The running annual arithmetic average based on monthly averages or quarterly samples of source water TOC for systems meeting a criterion in s. NR 809.569 (2) (b) 1. and 3. or of treated water TOC for systems meeting the criterion in s. NR 809.569 (2) (b) 2.

5. The running annual arithmetic average based on monthly averages or quarterly samples of source water SUVA for systems meeting the criterion in s. NR 809.569 (2) (b) 6. or of treated water SUVA for systems meeting the criterion in s. NR 809.569 (2) (b) 7.

6. The running annual average of source water alkalinity for systems meeting the criterion in s. NR 809.569 (2) (b) 3. and 4. and of treated water alkalinity for systems meeting the criterion in s. NR 809.569 (2) (c) 1.

7. The running annual average for both TTHM and HAA5 for systems meeting the criterion in s. NR 809.569 (2) (b) 3., 4., and 5.

8. The running annual average of the amount of magnesium hardness removal (as $CaCO_3$ mg/L) for systems meeting the criterion in s. NR 809.567 (2) (c) 2.

9. Whether the system is in compliance with the particular alternative compliance criterion in s. NR 809.569 (2) (b) and (c).

NR 809.569 Treatment technique for control of disinfection byproduct (DBP) precursors. For systems using conventional treatment which are supplied by a surface water source or by a groundwater source under the direct influence of surface water, the department identifies enhanced coagulation or enhanced softening as treatment techniques to control the level of disinfection byproduct precursors in drinking water and distribution systems. Treatment technique requirements for DBP precursors shall comply with the following:

(1) ENHANCED COAGULATION AND ENHANCED SOFTENING PERFORMANCE REQUIREMENTS. (a) Systems using enhanced coagulation or enhanced softening shall achieve the percent reduction of TOC specified in par. (b) between the source water and the combined filter effluent, unless the department approves a system's request for alternate minimum TOC removal (Step 2) requirements under par. (c).

(b) Required Step 1 TOC reductions, indicated in the following table, are based upon specified source water parameters measured in accordance with s. NR 809.563 (7). Systems practicing softening are required to meet the Step 1 TOC reductions in the far-right column, source water alkalinity >120 mg/L, for the specified source water TOC:

Step 1 Required Removal of TOC by Enhanced Coagulation and Enhanced Softening for Surface Water Systems Using Conventional Treatment [1,2]

Source water TOC, mg/l	**Source water alkalinity, mg/L as $CaCO_3$ (in percentages)**		
	0 - 60 %	> 60 - 120 %	> 120% [3]
>2.0-4.0	35.0	25.0	15.0
>4.0-8.0	45.0	35.0	25.0
>8.0	50.0	40.0	30.0

[1] Systems meeting at least one of the conditions in sub. (2) **(**b) 1. to 7. are not required to operate with enhanced coagulation.

[2] Softening systems meeting one of the alternative compliance criteria in sub. (2) (c) are not required to operate with enhanced softening.

[3] Systems practicing softening shall meet the TOC removal requirements in this column.

(c) Systems using conventional treatment which are supplied by a surface water source or by a groundwater source under the direct influence of surface water which cannot achieve the Step 1 TOC removals required by par. (b) due to water quality parameters or operational constraints shall apply to the department, within 3 months of failure to achieve the TOC removals required by par. (b), for approval of alternative minimum TOC (Step 2) removal requirements submitted by the system. If the department approves the alternative minimum TOC removal (Step 2) requirements, the department may make those requirements retroactive for the purposes of determining compliance. Until the department approves the alternative minimum TOC removal (Step 2) requirements, the system shall meet the Step 1 TOC removals contained in par. (b).

(d) Applications made to the department by enhanced coagulation systems for approval of alternative minimum TOC removal (Step 2) requirements under par. (c) shall include, as a minimum, results of bench- or pilot-scale testing conducted under subd. 1. and used to determine the alternate enhanced coagulation level.

1. Alternate enhanced coagulation level shall be determined to be coagulation at a coagulant dose and pH as determined by the method described in this subdivision and subds. 2. to 5. such that an incremental addition of 10 mg/L of alum, or equivalent amount of ferric salt, results in a TOC removal of ≤ 0.3 mg/ L. The percent removal of TOC at this point on the "TOC removal versus coagulant dose'' curve shall be determined to be the minimum TOC removal required for the system. Once approved by the department, this minimum requirement supersedes the minimum TOC removal required by the table in par. (b). This requirement will be effective until the department approves a new value based on the results of a new bench- and pilot-scale test. Failure to achieve department-set alternative minimum TOC removal levels is a violation of this chapter and the federal national primary drinking water regulations.

2. Bench- or pilot-scale testing of enhanced coagulation shall be conducted by using representative water samples and adding 10 mg/L increments of alum, or equivalent amounts of ferric salt, until the pH is reduced to a level less than or equal to the enhanced coagulation Step 2 target pH shown in the following table:

Enhanced Coagulation Step 2 Target pH

Alkalinity (mg/L as $CaCO_3$)	Target pH
0-60	5.5
>60-120	6.3
>120-240	7.0
>240	7.5

3. For waters with alkalinity of less than 60 mg/L for which addition of small amounts of alum or equivalent addition of iron coagulant drives the pH below 5.5 before significant TOC removal occurs, the system shall add necessary chemicals to maintain the pH between 5.3 and 5.7 in samples until the TOC removal of 0.3 mg/L per 10 mg/L alum added, or equivalent addition of iron coagulant, is reached.

4. The system may operate at any coagulant dose or pH necessary, consistent with other national public drinking water rules or NPDWRs, to achieve the minimum TOC percent removal approved under par. (c).

5. If the TOC removal is consistently less than 0.3 mg/L of TOC per 10 mg/L of incremental alum dose at all dosages of alum, or equivalent addition of iron coagulant, the water is deemed to contain TOC not amenable to enhanced coagulation. The system may then apply to the department for a waiver of enhanced coagulation requirements.

(2) CONVENTIONAL FILTRATION TREATMENT. (a) Systems using conventional filtration treatment which are supplied by a surface water source or by a groundwater source under the direct influence of surface water shall operate with enhanced coagulation or enhanced softening to achieve the TOC percent removal levels specified in sub. (1) unless the system meets at least one of the alternative compliance criteria listed in par. (b) or (c).

(b) Systems using conventional filtration treatment which are supplied by a surface water source or by a groundwater source under the direct influence of surface water may use the alternative compliance criteria in subds. 1. to 7. to comply with this section in lieu of complying with sub. (1). Systems shall still comply with monitoring requirements in s. NR 809.565 (6).

1. The system's source water TOC level, measured according to s. NR 809.563 (7) (c), is less than 2.0 mg/L, calculated quarterly as a running annual average.

2. The system's treated water TOC level, measured according to s. NR 809.563 (7) (c), is less than 2.0 mg/L, calculated quarterly as a running annual average.

3. The system's source water TOC level, measured as required by s. NR 809.563 (7) (c), is less than 4.0 mg/L, calculated quarterly as a running annual average; the source water alkalinity, measured according to s. NR 809.563 (7) (a), is greater than 60 mg/L (as $CaCO_3$), calculated quarterly as a running annual average; and either the TTHM and HAA5 running annual averages are no greater than 0.040 mg/L and 0.030 mg/L, respectively; or prior to the effective date for compliance in s. NR 809.562 (2), the system has made a clear and irrevocable financial commitment not later than the effective date for compliance in s. NR 809.562 (2) to use technologies that will limit the levels of TTHMs and HAA5 to no more than 0.040 mg/L and 0.030 mg/L, respectively.

4. Systems shall submit evidence of a clear and irrevocable financial commitment, in addition to a schedule containing milestones and periodic progress reports for installation and operation of appropriate technologies, to the department for approval not later than the effective date for compliance in s. NR 809.562 (2).

a. These technologies shall be installed and operating not later than June 30, 2005.

b. Failure to install and operate these technologies by the date in the approved schedule shall constitute a violation of this chapter and the national primary drinking water regulations.

5. The TTHM and HAA5 running annual averages are no greater than 0.040 mg/L and 0.030 mg/L, respectively, and the system uses only chlorine for primary disinfection and maintenance of a residual in the distribution system.

6. The system's source water SUVA, prior to any treatment and measured monthly according to s. NR 809.563 (7) (d), is less than or equal to 2.0 L/mg-M, calculated quarterly as a running annual average.

7. The system's finished water SUVA, measured monthly according to s. NR 809.563 (7) (d), is less than or equal to 2.0 L/mg-M, calculated quarterly as a running annual average.

(c) Systems practicing enhanced softening that cannot achieve the TOC removals required by sub. (1) (b) may use the alternative compliance criteria in subds. 1. and 2. in lieu of complying with sub. (1) (b). Systems shall still comply with monitoring requirements in s. NR 809.565 (6).

1. Softening that results in lowering the treated water alkalinity to less than 60 mg/L (as $CaCO_3$), measured monthly according to s. NR 809.563 (7) (a) and calculated quarterly as a running annual average.

2. Softening that results in removing at least 10 mg/L of magnesium hardness (as $CaCO_3$), measured monthly and calculated quarterly as an annual running average.

(3) COMPLIANCE CALCULATIONS. (a) Systems which are supplied by a surface water source or by a groundwater source under the direct influence of surface water, other than those identified in sub. (2) (b) or (c) shall comply with requirements contained in sub. (1) (b) or (c). Systems shall calculate compliance quarterly, beginning after the system has collected 12 months of data, by determining an annual average using the following method:

1. Determine actual monthly TOC percent removal, by using the following equation: (1-(treated water TOC/source water TOC)) x 100 = percent TOC removal.

2. Determine the required monthly TOC percent removal from either the table in sub. (1) (b) or from sub. (1) (c).

3. Divide the value in subd. 1. by the value in subd. 2.

4. Add together the results of subd. 3. for the last 12 months and divide by 12.

5. If the value calculated in subd. 4. is less than 1.00, the system is not in compliance with the TOC percent removal requirements.

(b) Systems may use the provisions in subds. 1. to 5. in lieu of the calculations in par. (a) 1. to 5. to determine compliance with TOC percent removal requirements.

1. In any month that the system's treated or source water TOC level, measured according to s. NR 809.563 (7) (c), is less than 2.0 mg/L, the system may assign a monthly value of 1.0, in lieu of the value calculated in par. (a) 3. when calculating compliance under the provisions of par. (a).

2. In any month that a system practicing softening removes at least 10 mg/L of magnesium hardness as $CaCO_3$, the system may assign a monthly value of 1.0 in lieu of the value calculated in par. (a) 3. when calculating compliance under the provisions of par. (a).

3. In any month that the system's source water SUVA, prior to any treatment and measured according to s. NR 809.563 (7) (d), is $\leq$ 2.0 L/mg-M, the system may assign a monthly value of 1.0, in lieu of the value calculated in par. (a) 3. when calculating compliance under the provisions of par. (a).

4. In any month that the system's finished water SUVA, measured according to s. NR 809.563 (7) (d), is $\leq$ 2.0 L/mg-M, the system may assign a monthly value of 1.0 in lieu of the value calculated in par. (a) 3. when calculating compliance under the provisions of par. (a).

5. In any month that a system practicing enhanced softening lowers alkalinity below 60 mg/L as $CaCO_3$, the system may assign a monthly value of 1.0, in lieu of the value calculated in par. (a) 3. when calculating compliance under the provisions of par. (a).

(c) Systems which are supplied by a surface water source or by a groundwater source under the direct influence of surface water and which are using conventional treatment may also comply with the requirements by meeting the criteria in sub. (2) (b) or (c).

NR 809.60 General requirements for Stage 2 disinfection byproducts control. **(1)** GENERAL. The following establish monitoring and other requirements for achieving compliance with maximum contaminant levels based on locational running annual averages (LRAA) for total trihalomethanes (TTHM) and haloacetic acids five (HAA5), and for achieving compliance with maximum residual disinfectant levels for chlorine and chloramine for certain consecutive systems.

(2) APPLICABILITY. A system is subject to these requirements if the system is a community water system or a nontransient noncommunity water system that uses a primary or residual disinfectant other than ultraviolet light or delivers or receives water that has been treated with a primary or residual disinfectant other than ultraviolet light.

(3) SCHEDULE. Systems shall comply with the requirements on the schedule in Table T based on system type:

Table T	
System Population	**Monitoring Compliance Dates:**[1]
Systems that are not part of a combined distribution system and systems that serve the largest population in the combined distribution system	
(1) System serving ≥ 100,000	April 1, 2012.
(2) System serving 50,000–99,999	October 1, 2012.
(3) System serving 10,000–49,999	October 1, 2013.
(4) System serving < 10,000	October 1, 2013 if no *Cryptosporidium* monitoring is required under s. NR 809.331 or October 1, 2014 if *Cryptosporidium* monitoring is required under s. NR 809.331
Systems that are part of a combined distribution system	
(5) Consecutive system or wholesale system	Systems shall sample using the earliest compliance date of all the systems in the combined distribution system determined by the system with the largest population using the dates indicated in (1) to (4) of this table.

[1]The department may grant up to an additional 24 months for compliance with MCLs and operational evaluation levels if the system requires capital improvements to comply with an MCL.

(4) MONITORING FREQUENCY. The frequency of monitoring is specified in s. NR 809.61(1)(c), Table U.
(a) Systems required to conduct quarterly monitoring shall begin monitoring in the first full calendar quarter that includes the compliance date in the table in sub. (3).
(b) Systems required to conduct monitoring at a frequency less than quarterly shall begin monitoring in the calendar month recommended in the initial distribution system evaluation (IDSE) report they prepared for, the EPA under Subpart U of 40 CFR part 141 of the U.S. Code or for the department under subchapter VII or in the calendar month identified in the monitoring plan developed under s. NR 809.62 which shall be no later than 12 months after the compliance date in the table in par. (3).
(c) Systems required to conduct quarterly monitoring, shall make compliance calculations at the end of the fourth calendar quarter that follows the compliance date and at the end of each subsequent quarter or earlier if the LRAA calculated based on fewer than four quarters of data would cause the MCL to be exceeded regardless of the monitoring results of subsequent quarters.
(d) If the system is required to conduct monitoring at a frequency that is less than quarterly, the system shall make compliance calculations beginning with the first compliance sample taken after the compliance date.
(5) CONSECUTIVE SYSTEMS. The department may determine that a public water system that receives some or all of its water supply from a wholesale system is not a consecutive system, based on any of the following factors:
(a) Receives water from a wholesale system only on an emergency basis.
(b) Receives only a small percentage and small volume of water from a wholesale system.
(6) WHOLESALE SYSTEMS. The department may determine that a public water system that provides some or all of the water supply for another public water system is not a wholesale system, based on any of the following factors:
(a) Delivers water to a consecutive system only on an emergency basis.
(b) Delivers only a small percentage and small volume of water to a consecutive system.
(7) MONITORING AND COMPLIANCE. (a) Systems required to monitor quarterly shall calculate LRAAs for TTHM and HAA5 to determine that each monitoring location LRAA does not exceed the MCL.
1. If four consecutive quarters of monitoring are not completed, compliance with the MCL shall be based on the average of the available data from the most recent four quarters.
2. If more than one sample per quarter is collected at a monitoring location, all samples taken in the quarter at that location shall be averaged to determine a quarterly average to be used in the LRAA calculation.
(b) Systems required to monitor yearly or less frequently shall establish compliance for TTHM and HAA5 by using each sample collected to determine if it is less than the MCL.
1. If any sample exceeds the MCL, the system shall comply with the requirements of s. NR 809.63(2).
2. If no sample exceeds the MCL, the sample result for each monitoring location is considered the LRAA for that monitoring location.
(c) A system is in violation of the monitoring requirements for each quarter that a LRAA is calculated using a quarter in which the system failed to monitor.

NR 809.61 Routine monitoring for Stage 2 DBP. (1) MONITORING. (a) A system that submitted an IDSE report to EPA under Subpart U of 40 CFR part 141 of the U.S. Code or the department under subchapter VII shall begin monitoring at the locations and months recommended in the IDSE report submitted to EPA under Subpart U of 40 CFR part 141.605 or the department under subchapter VII following the schedule in s. NR 809.60(3), unless the department requires other locations or additional locations after its review.

(b) A system that submitted a 40/30 certification from EPA under Subpart U of 40 CFR part 141.603 or the department under s. NR 809.974 or qualified for a very small system waiver from EPA under Subpart U of 40 CFR 141.604 or the department under s. NR 809.975 or a system that is a nontransient noncommunity water system serving <10,000, shall monitor at the location or locations and dates identified in the system's monitoring plan in s. NR 809.565(8), updated as required by s. NR 809.62.

(c) Monitoring shall be conducted at no fewer than the number of locations identified in Table U.

TABLE U

Stage 2 DBP -- Disinfection byproducts monitoring frequency and locations.

Source water type	**Population size category**	**Monitoring Frequency**	**Distribution system monitoring location total per monitoring period**
Surface water and GWUDI:			
	<500	Annual	2
	500–3,300	quarterly	2
	3,301–9,999	quarterly	2
	10,000–49,999	quarterly	4
	50,000–249,999	quarterly	8
	250,000–999,999	quarterly	12
	1,000,000–4,999,999	quarterly	16
	≥ 5,000,000	quarterly	20
Groundwater:			
	<500	Annual	2
	500–9,999	Annual	2

	10,000–99,999	quarterly	4
	100,000–499,999	quarterly	6
	≥ 500,000	quarterly	8

(d) All systems shall monitor during the month of highest DBP concentrations.
(e) Systems on quarterly monitoring shall take dual sample sets every 90 days at each monitoring location, except for surface water systems or groundwater under the direct influence of surface water systems serving 500–3,300. Groundwater systems serving 500–9,999 on annual monitoring shall take dual sample sets at each monitoring location. All other systems on annual monitoring and surface water systems or groundwater under the direct influence of surface water systems serving 500–3,300 shall take individual TTHM and HAA5 samples, instead of a dual sample set, at the locations with the highest TTHM and HAA5 concentrations, respectively. For systems serving fewer than 500 people, only one location with a dual sample set
per monitoring period is required if the highest TTHM and HAA5 concentrations occur at the same location and month.
(f) Undisinfected systems that begin using a disinfectant other than UV light after the dates for complying with the Initial Distribution System Evaluation requirements shall consult with the department to identify compliance monitoring locations for s. NR 809.60 and develop a monitoring plan under s. NR 809.62 that includes those monitoring locations.
(2) ANALYTICAL METHODS AND LABORATORIES. (a) Samples shall be analyzed using an approved method listed in s. NR 809.563(2) Table R for TTHM and HAA5.
(b) The analysis under par. (a) shall be conducted by laboratories that are certified by EPA or the department under ch. NR 149.

NR 809.62 Monitoring plan for Stage 2 DBP. **(1)** GENERAL MONITORING PLAN REQUIREMENTS. Monitoring plans shall be developed, implemented and kept up to date by all systems that are required to monitor for TTHMs and HAA5s and shall be kept on file for department and public review.
(a)Monitoring plans under this section shall be completed no later than the date the system is required to begin initial compliance monitoring under s. NR 809.61.
(b)The monitoring plan shall contain the all of the following elements:
1. Monitoring locations.
2. Monitoring dates.
3. Compliance calculation procedures.
4. Monitoring plans for any other systems in a combined distribution system.
(c) If a system was not required to submit an IDSE report to the EPA under Subpart U of 40 CFR 141.601 or 141.602 or the department under subchapter VII and does not have sufficient monitoring locations to identify the required number of locations indicated in Subpart U of 40 CFR 141.605(b) or under s. NR 809.976; the system shall do all of the following:

1. Identify additional locations by alternating selection of locations representing high TTHM levels and high HAA5 levels until the required number of compliance monitoring locations have been identified.
2. Provide the rationale for identifying the locations as having high levels of TTHM or HAA5. Systems should compare the number of monitoring locations required under s. NR809.565 with the number of monitoring locations under s. NR 809.61 Table T. If the system was required to have more monitoring locations under s. NR 809.565 than under s. NR 809.62 compliance monitoring, the system shall identify which locations will be used by alternating selection of locations representing high TTHM levels and high HAA5 levels until the required number of compliance monitoring locations under s. NR 809.61 Table T have been identified.
(2) SUBMITTAL OF MONITORING PLANS**.** If a system serves > 3,300 people, the system shall submit a copy of a monitoring plan to the department prior to the date the system is required to conduct initial monitoring under s. NR 809.61, unless the IDSE report submitted under Subpart U of 40 CFR part 141 of the Federal Regulation or subchapter VIII contains all the information required by this paragraph.
(3) REVISING MONITORING PLANS. Monitoring plans shall be revised to reflect changes in treatment, distribution system operations and layout including new service areas, or other factors that may affect TTHM or HAA5 formation, or as approved by the department.
a. The department shall be consulted regarding the need for changes and the appropriateness of changes to a monitoring plan.
b. If monitoring locations are changed, existing compliance monitoring locations with the lowest LRAA shall be replaced with new locations that are expected have the highest TTHM or HAA5 levels in the distribution system.
c. The department may also require other modifications in the systems monitoring plan.
d. If the system serves > 3,300 people, the system shall submit a copy of the modified monitoring plan to the department prior to the date the system is required to comply with the revised monitoring plan.

NR 809.63 Requirements for reduced and increased monitoring for Stage 2 DBP.
(1) REDUCED MONITORING. Monitoring may be reduced when the LRAA is less than or equal to 0.040 mg/L for TTHM and less than or equal to 0.030 mg/L for HAA5 at all compliance monitoring locations. The reduced sampling frequency and number of sample sites are given in Table V:

Table V
Reduced Stage 2 Monitoring Frequency and Number of Sites

Source Water Type	Population Size Category	Monitoring Frequency	Distribution System Monitoring Location Total per Monitoring Period
Surface Water or GWUDI	less than 500	Annual	Monitoring may not be reduced.
	500 to 3,300	Annual	1 dual sample set per year if the highest TTHM and HAA5 measurements occurred at the same location and quarter.

	3,301 to 9,999	Annual	2 dual sample sets: one at the location and during the quarter with the highest TTHM single measurement, one at the location and during the quarter with the highest HAA5 single measurement.
	10,000 to 49,999	quarterly	2 dual sample sets at the locations with the highest TTHM and highest HAA5 LRAAs
	50,000 to 249,999	quarterly	4 dual sample sets at the locations with the two highest TTHM and two highest HAA5 LRAAs
	250,000 to 999,999	quarterly	6 dual sample sets at the locations with the three highest TTHM and three highest HAA5 LRAAs
	1,000,000 to 4,999,999	quarterly	8 dual sample sets at the locations with the four highest TTHM and four highest HAA5 LRAAs
	5,000,000 or more	quarterly	10 dual sample sets at the locations with the five highest TTHM and five highest HAA5 LRAAs
Ground-water	less than 500	every third year (triennial)	1 dual sample set per year if the highest TTHM and HAA5 measurements occurred at the same location and quarter.
	500 to 9,999	Annual	1 dual sample set per year if the highest TTHM and HAA5 measurements occurred at the same location and quarter.
	10,000 to 99,999	Annual	2 dual sample sets: one at the location and during the quarter with the highest TTHM single measurement, one at the location and during the quarter with the highest HAA5 single measurement
	100,000 to 499,999	quarterly	2 dual sample sets at the locations with the highest TTHM and highest HAA5 LRAAs
	500,000 or more	quarterly	4 dual sample sets at the locations with the two highest TTHM and two highest HAA5 LRAAs

(a) Systems on quarterly monitoring shall take dual sample sets every 90 days.
(b) Systems on annual monitoring and surface water or GWUDI systems serving 500 to 3,300 people may use a single site if the highest TTHM and HAA5 concentrations occur at the same time and place. Any such system may be required to take individual TTHM and HAA5 samples, instead of a dual sample set, at sites identified as the highest TTHM and HAA5 sites, respectively. If separate sites for individual TTHM and HAA5 samples are used, then the TTHM sample shall be collected during the quarter with highest historical TTHM levels and the HAA5 sample shall be collected during the quarter with the highest historical HAA5 level.
(c) Only data collected under the provisions of s. NR 809.565 and under this section may be used to qualify for reduced monitoring.
(d) To remain on reduced monitoring, a system shall meet the following conditions:

1. Systems on a quarterly reduced monitoring schedule may remain on that reduced schedule as long as the TTHM LRAA ≤0.040 mg/L and the HAA5 LRAA ≤0.030 mg/L at each monitoring location.
2. Systems on an annual or less frequent reduced monitoring schedule may remain on that reduced schedule as long as each TTHM sample ≤0.060 mg/L and each HAA5 sample ≤0.045 mg/L.
3. In addition to subd. 1. and 2., for a surface water or GWUDI system, the source water annual average TOC level, before any treatment, shall be ≤4.0 mg/L , based on monitoring conducted under s. NR 809.656.
(e) If the LRAA based on quarterly monitoring at any monitoring location exceeds either 0.040 mg/L for TTHM or 0.030 mg/L for HAA5 or if the annual (or less frequent) sample at any location exceeds either 0.060 mg/L for TTHM or 0.045 mg/L for HAA5, or if the source water annual average TOC level, before any treatment, is >4.0 mg/L at any treatment plant treating surface water or groundwater under the direct influence of surface water, the system shall resume routine monitoring under s. NR 809.62 or begin increased monitoring under sub. (2).
(f) The department may return a system to routine monitoring, at any time, at the department's discretion.
(2) CONDITIONS REQUIRING INCREASED MONITORING. (a) A system that is required to monitor at a particular location annually or less frequently than annually under s. NR 809.62 or 809.63(1), shall increase monitoring to dual sample sets once per quarter at all locations if a TTHM sample is >0.080 mg/L or a HAA5 sample is >0.060 mg/L at any location.
(b) Samples shall be taken every 90 days plus or minus 5 days beginning from the date of collection of the original sample that exceeded the MCL for either TTHM or HAA5.
(3) MCL VIOLATION DETERMINATION. A system is in violation of the MCL when the LRAA for TTHM or HAA5 exceeds the MCLs in s. NR 809.561(3), calculated based on four consecutive quarters of monitoring or the LRAA calculated based on fewer than four quarters of data if the MCL would be exceeded regardless of the monitoring results of subsequent quarters.
(4) RETURN TO REDUCED MONITORING. A system may be returned to routine monitoring by the department once the system has completed increased monitoring for at least four consecutive quarters and the LRAA for every monitoring location is ≤0.060 mg/L for TTHM and ≤0.045 mg/L for HAA5.
(5) VIOLATION OF MONITORING REQUIREMENTS. A system is in violation of the monitoring requirements if the system fails to monitor during a quarter and for each subsequent quarter that the monitoring result would have been used in calculating a LRAA.

NR 809.64 Additional disinfection byproducts requirements for consecutive systems under Stage 2 DBP. A consecutive system that does not add a disinfectant but receives and delivers water that has been treated with a primary or residual disinfectant other than ultraviolet light, shall comply with analytical and monitoring requirements for chlorine and chloramines in s. NR 809.565(5)(a) and the compliance requirements in s. NR 809.566(3)(a) beginning April 1, 2009, unless required to comply earlier by the department, and shall report monitoring results under s. NR 809.567(3)(a).

NR 809.65 Operational evaluation levels for disinfection byproducts under Stage 2 DBP. (1) OPERATIONAL EVALUATION. An operational evaluation shall be conducted if any of the following occurs:
(a) The average sum of the two previous quarters' TTHM results plus twice the current quarter's TTHM result, divided by 4, exceeds 0.080 mg/L at any monitoring location.
(b) The average sum of the two previous quarters' HAA5 results plus twice the current quarter's HAA5 result, divided by 4, exceeds 0.060 mg/L at any monitoring location.
(2) OPERATIONAL EVALUATION REPORTING. If an operational evaluation must be performed as required in sub. (1) it shall be submitted as a written report to the department no later than 90 days after being notified of the analytical result that causes the system to exceed the operational evaluation level. The written report shall be made available to the public upon request.
(3) CONTENTS OF AN OPERATIONAL REPORT. An operational evaluation shall include an examination of system treatment and distribution operational practices, including storage tank operations, excess storage capacity, distribution system flushing, changes in sources or source water quality, and treatment changes or problems that may contribute to TTHM and HAA5 formation and what steps could be considered to minimize future exceedances.
(4) LIMITING THE SCOPE OF AN OPERATIONAL EVALUATION. A system may request and the department may allow the system to limit the scope of the operational evaluation if the system is able to identify the cause of the operational evaluation level exceedance. The request to limit the scope of the evaluation does not extend the schedule required under sub. (2) for submitting the written report. If the department approves this limited scope of evaluation, the approval shall be in writing and the system shall keep the written approval with the completed report.

NR 809.66 Requirements for remaining on reduced TTHM and HAA5 monitoring based on Stage 1 DBP results. (1) REMAINING ON REDUCED MONITORING. A system may remain on reduced monitoring after the dates identified in s. NR 809.60(3) for compliance with this subchapter only if the system qualified for a 40/30 certification by EPA under Subpart U §141.603 of the Federal Regulations or received a very small system waiver under Subpart U of 40 CFR 141.604 of the Federal Regulations, and if the system meets the reduced monitoring criteria in NR 809.63(1) and all of the following criteria:
(a) The system does not change or add monitoring locations from those used for compliance monitoring under ss. NR 809.565(8) and 809.566.
(b) The system's monitoring locations under s. NR 809.62 have not been changed from the system's monitoring locations under s. NR 809.565(8) after the compliance dates identified in s. NR 809.60(3).

NR 809.67 Requirements for remaining on increased TTHM and HAA5 monitoring based on Stage 1 DBP results. (1) INCREASED MONITORING DUE TO DBP 1. A system that is on increased monitoring under ss. NR 809.565 and 809.566 shall remain on increased monitoring until the system qualifies for a return to routine monitoring under s. NR 809.61.

(2) INCREASED MONITORING DUE TO DBP 2. Systems shall conduct increased monitoring under s. NR 809.63(2) at the monitoring locations in the monitoring plan developed under s. NR 809.62 beginning on the date identified in s. NR 809.60(3) for compliance with this subchapter and shall remain on increased monitoring until the system qualifies for a return to routine monitoring under s. NR 809.61.

NR 809.68 Reporting and recordkeeping requirements for Stage 2 DBP. (1) REPORTING.
(a) Systems shall report all of the following information for each monitoring location to the department no later than 10 days after the end of any quarter in which monitoring is required:
1. Number of samples taken during the quarter.
2. Date and results of each sample taken during the quarter.
3. Arithmetic average of quarterly results for the four quarters immediately previous for each monitoring location (LRAA), beginning at the end of the fourth calendar quarter that follows the compliance date and at the end of each subsequent quarter. If the LRAA calculated based on fewer than four quarters of data would cause the MCL to be exceeded regardless of the monitoring results of subsequent quarters, the system shall report this information to the department as part of the first report due following the compliance date or anytime thereafter that this determination is made. If the system is required to conduct monitoring at a frequency that is less than quarterly, the system shall make compliance calculations beginning with the first compliance sample taken after the compliance date, unless the system is required to conduct increased monitoring under s. NR 809.62.
4. If the MCL for TTHM or HAA5s was violated at any monitoring location.
5. Any operational evaluation levels that were exceeded during the quarter and, if so, the location and date, and the calculated TTHM and HAA5 levels.
(b) Surface water or groundwater under the direct influence of surface water systems seeking to qualify for or remain on reduced TTHM or HAA5 monitoring, shall report the following source water TOC information for each treatment plant that treats surface water or groundwater under the direct influence of surface water to the department no later than 10 days after the end of any quarter in which monitoring is required:
1. The number of source water TOC samples taken each month during the previous quarter.
2. The date and result of each sample taken during the previous quarter.
3. The quarterly average of monthly samples taken during the previous quarter or the result of the quarterly sample.
4. The running annual average (RAA) of quarterly averages from the past four quarters.
5. Whether the RAA exceeded 4.0 mg/L.
(c) The department may choose to perform calculations and determine whether the MCL was exceeded or the system is eligible for reduced monitoring in lieu of having the system report that information
(2) RECORDKEEPING. The system shall retain any s. NR 809.62 monitoring plans and monitoring results collected under s. NR 809.61 as required by s. NR 809.97.

Subchapter IV — Secondary Chemical and Physical Standards and Monitoring Requirements, Miscellaneous Chemical Monitoring Requirements, Raw Surface Water Standards, and Certified Laboratories

NR 809.70 Secondary inorganic chemical and physical standards. (1) SECONDARY STANDARDS**.** Waters containing inorganic chemicals in quantities above the limits contained in this section are not hazardous to health but may be objectionable to an appreciable number of persons. The following are the secondary standards for inorganic chemicals:

Standard	Milligrams per liter
Aluminum	0.05 to 0.2
Chloride	250
Color	15 units
Copper	1.0
Corrosivity	Noncorrosive
Fluoride[1]	2.0
Foaming agents MBAS (Methylene-Blue Active Substances)	0.5
Hydrogen Sulfide	not detectable
Iron	0.3
Manganese	0.05
Odor	3 (Threshold No.)
Silver	0.1
Sulfate	250
Total Residue	500
Zinc	5

[1] The primary maximum contaminant level for fluoride is contained in s. NR 809.11.

(2) APPLICABILITY OF SECONDARY STANDARDS. The secondary standards contained in this section apply to all public water systems. Compliance with these standards shall be calculated in accordance with s. NR 809.61.

(3) COMPLIANCE WITH THE SECONDARY DRINKING WATER STANDARD AND PUBLIC NOTIFICATION FOR FLUORIDE. Suppliers of water having community water systems that exceed the secondary maximum contaminant level for fluoride as determined by the last single sample taken in accordance with the requirement of s. NR 809.12, but do not exceed the maximum contaminant level for fluoride as specified in s. NR 809.11, shall provide the notice as specified in s. NR 809.957 to all billing units annually, all new billing units at the time service begins and annually to the department and the department of health and family services.

NR 809.71 Sampling and analytical requirements for secondary standards. (1) COMPLAINTS ON AESTHETIC WATER QUALITY. If the department receives complaints regarding the aesthetic quality of the water, the supplier of water may be required to implement a monitoring program to determine compliance with s. NR 809.60.

(2) DEPARTMENT REQUIRED REMEDIAL ACTION. If it is determined by the department that physical or chemical substances or both in excess of those standards contained in s. NR 809.60 are objectionable to an appreciable number of persons and are detrimental to the public welfare, the department may, on its own motion, require remedial action by the supplier of water to insure that the public receives the highest quality water practicably obtainable.

(3) LABORATORY REQUIREMENTS. The department may require that laboratory test results submitted to the department under this section be performed by a laboratory certified or registered under ch. NR 149.

NR 809.73 Sampling and analytical requirements for other chemicals. (1) OTHER CHEMICAL TESTING. If the department determines that the public health, safety or welfare requires testing for chemical or physical constituents in water which are not contained in this chapter, the department may order such testing as it deems necessary.

(a) The department shall provide public notice and an opportunity for public hearing within 90 days after any order under this subsection.

(b) Hearings under this subsection shall be class 1 hearings and shall be held in accordance with ch. 227, Stats.

(c) Such testing shall be done at a laboratory certified or registered by EPA or under ch. NR 149 as the department may require on a case-by-case basis.

(2) TREATMENT CONTROL TESTING. Testing for other constituents shall be performed at water systems as determined necessary by the department for design and control of treatment processes for contaminants which may affect public health or welfare. Such testing shall be done at a laboratory certified or registered by EPA or under ch. NR 149 as the department may require on a case-by-case basis.

NR 809.74 Additional requirements for systems which chlorinate or fluoridate water. (1) SYSTEMS WHICH ADD FLUORIDE. (a) The supplier of water for a community water system artificially fluoridating the water shall establish a monitoring program in order to maintain the fluoride concentration within the range of 1.0 to 1.5 milligrams per liter as recommended by the dental health section of the department of health services for optimum dental benefits.

(b)The monitoring program shall include:

1. Submission of the results of daily fluoride tests of samples from the distribution system.

2. One sample per month taken from a representative location in the distribution system and submitted to the state laboratory of hygiene. The sample submitted to the state laboratory of hygiene shall be a portion of a split sample so that the operator can determine the fluoride concentration with the operator's equipment and compare it to the state laboratory results. The fluoride concentration obtained by the operator shall be noted on the data sheet prior to submission to the state laboratory.

Note: For waterworks with large distribution systems and multiple sources, more than one fluoride test per day may be necessary to assure proper feed rates. See s. NR 811.54(5) for testing equipment requirements. Exceptions to the daily fluoride test

requirement may be approved by the department if it is demonstrated that the optimum fluoride concentration in par. (a) will be maintained by a reduced monitoring program.

(2) CHLORINE. The suppliers of water for all waterworks which chlorinate water shall test chlorine residuals at locations and intervals necessary to control the chlorination process. At groundwater supplies, the chlorine residual of a sample from a representative location in the distribution system shall be checked at least twice per week. Waterworks having surface water treatment plants or GWUDI systems shall determine the chlorine residual in the plant effluent continuously and in the distribution system at least daily in representative locations. Where water quality changes rapidly, residuals shall be tested at more frequent intervals as specified by the department and in those individual cases, continuous monitoring equipment may be required if the department determines it is necessary to protect public health. Chlorine residual testing is required when bacteriological samples are taken.

NR 809.75 Raw surface water standards. The intake water for surface water treatment plants shall be the highest quality reasonably available and which, with appropriate treatment and adequate safeguards, will meet the drinking water standards in this chapter.

NR 809.76 Laboratory Certification. (1) LABORATORY CERTIFICATION FOR COMPLIANCE SAMPLES. For the purpose of compliance with ss. NR 809.113, 809.118, 809.119, 809.203, 809.25, 809.243, 809.54, 809.549 and 809.563, samples shall be analyzed at the state laboratory of hygiene, at a laboratory facility acceptable to the U.S. environmental protection agency, or at a laboratory certified for the safe drinking water test category under ch. NR 149. For the purpose of compliance with ss. NR 809.311, 809.323 and 809.334, bacteriological samples shall be analyzed at a laboratory facility certified or approved by the department of agriculture, trade and consumer protection, or at a laboratory facility acceptable to the U.S. environmental protection agency. For the purpose of compliance with s. NR 809.52 radiological samples shall be analyzed at a laboratory facility certified or acceptable to the U.S. environmental protection agency.

(2) LABORATORY CERTIFICATION FOR OPERATIONAL SAMPLES. All community water systems utilizing surface water sources or GWUDI shall analyze bacteriological samples for in-plant operational control at a laboratory facility approved by the department of agriculture, trade and consumer protection.

NR 809.77 Monitoring of consecutive public water systems. When a public water system supplies water to one or more other public water systems, the department may modify the monitoring requirements imposed by this chapter to the extent that the interconnection of the systems justifies treating them as a single system for monitoring purposes. Any modified monitoring shall be conducted pursuant to a schedule specified by the department and concurred in by the administrator of the U.S. environmental protection agency.

Subchapter V — Reporting, Consumer Confidence Reports and Record Keeping

NR 809.80 Reporting requirements. (1) REPORTING PERIODS. Unless a shorter reporting period is specified in this chapter, the supplier of water shall use a laboratory that will report to the department the results of any test measurement or analysis required by this chapter within one of the following time periods, whichever is shortest:

(a) The first 10 days following the month in which the analysis is completed.

(b) The first 10 days following the end of the required monitoring period as stipulated by the department.

(2) VIOLATION REPORTING**.** Unless another time period is specified in this chapter, the supplier of water shall report to the department, no later than 24 hours after receiving the test results, the failure to comply with any maximum contaminant level, or monitoring requirement, or treatment technique set forth in this chapter.

(3) REPORTING RESPONSIBILITY. The supplier of water is not required to report analytical results to the department if the laboratory doing the analysis has reported the results electronically to the department within the time frames contained in this section. The supplier of water is responsible for analytical results that are not reported within the required time frames.

(4) ELECTRONIC REPORTING**.** (a) When determining compliance with any water quality monitoring, or drinking water maximum contaminant levels specified in this chapter, the department shall accept analytical results only from laboratories that report results directly to the department in a department approved electronic format and are certified under ch. ATCP 77, ch. NR 149 for safe drinking water analyses or laboratories approved by EPA for radionuclide analyses.

(b) Results of microbiological samples collected to satisfy requirements of subch. I shall be reported to the department and the water supplier within 24 hours of the time the results are
obtained by the laboratory. When results are obtained on a weekend or holiday, the results shall be provided to the water supplier and the department as soon as practicable.

(c) Analytical results other than those under par. (b) obtained to satisfy requirements of this chapter shall be reported as required under subs. (1) and (2).

(d) The department may approve submission of compliance data required under this chapter in alternate formats on a case−by−case basis if the alternate format does not create a delay in determining compliance with any requirement in this chapter or have the potential for delaying response to a public health threat.

(5) PUBLIC NOTICE REPORTING**.** The supplier of water, within 10 days of completion of each public notification required under subch. VII, shall submit to the department a certification that it has fully complied with the public notification regulations. The supplier of water shall include with this certification a representative copy of each type of notice distributed, published, posted, or made available to the persons served by the system or to the media, or both.

(6) MONTHLY OPERATING REPORTS – WITHOUT FILTRATION. A public water system that uses a groundwater source under the direct influence of surface water and does not provide filtration treatment shall report monthly to the department the information specified in this subsection.

(a) Source water quality information shall be reported to the department within 10 days after the end of each month the system serves water to the public. Information that shall be reported includes:

1. The cumulative number of months for which results are reported.

2. The number of fecal or total coliform samples, whichever are analyzed during the month, or if a system monitors for both, only the number of fecal coliform samples, the dates of sample collection, and the dates when the turbidity level exceeded 1 NTU.

3. The number of samples during the month that had equal to or less than 20/100 ml fecal coliforms or equal to or less than 100/100 ml total coliforms, whichever are analyzed.

4. The cumulative number of fecal or total coliform samples, whichever are analyzed, during the previous 6 months the system served water to the public.

5. The cumulative number of samples that had equal to or less than 20/100 ml fecal coliforms or equal to or less than 100/100 ml total coliforms, whichever are analyzed, during the previous 6 months the system served water to the public.

6. The percentage of samples that had equal to or less than 20/100 ml fecal coliforms or equal to or less than 100/100 ml total coliforms, whichever are analyzed, during the previous 6 months the system served water to the public.

7. The maximum turbidity level measured during the month, the dates of occurrence for any measurements which exceeded 5 NTU, and the dates the occurrences were reported to the department.

8. For the first 12 months of record keeping, the dates and cumulative number of events during which the turbidity exceeded 5 NTU, and after one year of record keeping for turbidity measurements, the dates and cumulative number of events during which the turbidity exceeded 5 NTU in the previous 12 months the system served water to the public.

9. For the first 120 months of record keeping, the dates and cumulative number of events during which the turbidity exceeded 5 NTU, and after 10 years of record keeping for turbidity measurements, the dates and cumulative number of events during which the turbidity exceeded 5 NTU in the previous 120 months the system served water to the public.

(b) Disinfection information specified in s. NR 810.38 (1) shall be reported to the department within 10 days after the end of each month the system serves water to the public. Information that shall be reported includes:

1. For each day, the lowest measurement of residual disinfectant concentration in mg/l in water entering the distribution system.

2. The date and duration of each period when the residual disinfectant concentration in water entering the distribution system fell below 0.2 mg/l and when the department was notified of the occurrence.

3. The daily residual disinfectant concentrations (in mg/l) and disinfectant contact times (in minutes) used for calculating the CT values.

4. If chlorine is used, the daily measurements of pH of disinfected water following each point of chlorine disinfection.

5. The daily measurements of water temperature in ºC following each point of disinfection.

6. The daily CTcalc and $CTcalc/CT_{99.9}$ values for each disinfectant measurement or sequence and the sum of all $CTcalc/CT_{99.9}$ values ($\Sigma(CTcalc/CT_{99.9})$) before or at the first customer.

7. The daily determination of whether disinfection achieves adequate *Giardia lamblia* cyst and virus inactivation, i.e., whether ($CTcalc/CT_{99.9}$) is at least 1.0, or where disinfectants other than chlorine are used, other indicator conditions that the department determines are appropriate, are met.

8. The following information on the samples taken in the distribution system in conjunction with total coliform monitoring pursuant to s. NR 810.31:

a. Number of instances where the residual disinfectant concentration is measured;

b. Number of instances where the residual disinfectant concentration is not measured but heterotrophic bacteria plate count (HPC) is measured;

c. Number of instances where the residual disinfectant concentration is measured but not detected and no HPC is measured;

d. Number of instances where no residual disinfectant concentration is detected and where HPC is > 500/ml;

e. Number of instances where the residual disinfectant concentration is not measured and HPC is > 500/ml;

f. For the current and previous month the system serves water to the public, the value of "V" in the following formula:

$$V = c + d + e/a + b \times 100$$

where:

a = the value in subd. 8. a.

b = the value in subd. 8. b.

c = the value in subd. 8. c.

d = the value in subd. 8. d.

e = the value in subd. 8. e.

g. If the department determines, based on site specific considerations, that a system has no means for having a sample transported and analyzed for HPC by a certified laboratory within the requisite time and temperature conditions specified by s. NR 810.38 and that the system is providing adequate disinfection in the distribution system, the requirements of subd. 8. a. to f. do not apply.

9. A public water system owner or operator need not report the data listed in subds. 1. and 3. to 6. if all data listed in par. (b) remain on file at the system and department determines that:

a. The system owner or operator has submitted to the department all the information required by subds. 1. to 8. for at least 12 months; and

b. The department has determined that the system is not required to provide filtration treatment.

(c) No later than 10 days after September 30, the end of each federal fiscal year, each water supplier shall provide to the department a report which summarizes the water system's compliance with all wellhead protection program requirements specified in s. NR 810.32(2)(a).

(d) No later than 10 days after September 30, the end of each federal fiscal year, each water supplier shall provide to the department a report of the on-site inspection conducted during that year pursuant to s. NR 810.32(2)(c), unless the on-site inspection was conducted by the department. If the inspection was conducted by the department, the department shall provide a copy of its report to the public water system.

(e) 1. Each water supplier, upon discovering that a waterborne disease outbreak potentially attributable to their water system has occurred, shall report that occurrence to the department as soon as possible, but no later than by the end of the next business day.

2. If at any time the turbidity exceeds 5 NTU, the water supplier shall consult with the department as soon as possible, but no later than 24 hours after the exceedance is known, in accordance with the public notification requirements under s. NR 809.952(2)(c).

3. If at any time the disinfectant residual falls below 0.2 mg/l in the water entering the distribution system, the water supplier shall notify the department as soon as possible, but no later than by the end of the next business day. The water supplier also shall notify the department by the end of the next business day whether or not the residual was restored to at least 0.2 mg/l within 4 hours.

(7) MONTHLY OPERATING REPORTS – WITH FILTRATION. A public water system that uses a surface water source or a groundwater source under the direct influence of surface water and provides filtration treatment shall report monthly to the department the information specified in this subsection.

(a) Turbidity measurements as required by s. NR 810.38 (2)(a) shall be reported within 10 days after the end of each month the system serves water to the public. Information that shall be reported includes:

1. The total number of filtered water turbidity measurements taken during the month and the highest daily turbidity measurement for each day.

2. The number and percentage of filtered water turbidity measurements taken during the month which are less than or equal to the turbidity limits specified in s. NR 810.29 for the filtration technology being used.

3. The date and value of any turbidity measurements taken during the month which exceed 1.0 NTU for systems using conventional or direct filtration, or which exceed the maximum level set in s. NR 810.29.

(b) Disinfection information specified in s. NR 810.38 shall be reported to the department within 10 days after the end of each month the system serves water to the public. Information that shall be reported includes:

1. For each day, the lowest measurement of residual disinfectant concentration in mg/l in water entering the distribution system.

2. The date and duration of each period when the residual disinfectant concentration in water entering the distribution system fell below 0.2 mg/l and when the department was notified of the occurrence.

3. The following information on the samples taken in the distribution system in conjunction with total coliform monitoring pursuant to s. NR 810.31:

a. Number of instances where the residual disinfectant concentration is measured;

b. Number of instances where the residual disinfectant concentration is not measured but heterotrophic bacteria plate count (HPC) is measured;

c. Number of instances where the residual disinfectant concentration is measured but not detected and no HPC is measured;

d. Number of instances where no residual disinfectant concentration is detected and where HPC is > 500/ml;

e. Number of instances where the residual disinfectant concentration is not measured and HPC is > 500/ml;

f. For the current and previous month the system serves water to the public, the value of “V” in the following formula:

$$V = c + d + e/a + b \times 100$$

where:

a = the value in subd. 3. a.

b = the value in subd. 3. b.

c = the value in subd. 3. c.

d = the value in subd. 3. d.

e = the value in subd. 3. e.

g. If the department determines, based on site specific considerations, that a system has no means for having a sample transported and analyzed for HPC by a certified laboratory within the requisite time and temperature conditions specified by s. NR 810.38 and that the system is providing adequate disinfection in the distribution system, the requirements of subd. 3. a. to f. do not apply.

4. A water supplier need not report the data listed in subd. 1. if all data listed in this paragraph remains on file at the system and the department determines that the water supplier has submitted all the information required by this paragraph for at least 12 months.

(c) 1. If during any 4 hour monitoring period the turbidity exceeds 1.0 NTU or at any time during the month, turbidity measurements indicate the 95th percentile turbidity level of 0.5 NTU will be exceeded for that month, the water supplier shall inform the department as soon as possible, but no later than the end of the next business day.

2. If at any time the disinfectant residual falls below 0.2 mg/l in the water entering the distribution system, the water supplier shall notify the department as soon as possible, but no later than the end of the next business day. The water supplier also shall notify the department by the end of the next business day whether or not the residual was restored to at least 0.2 mg/l within 4 hours.

(8) RECORDS RETENTION AND REPORTING. Systems shall maintain the results of individual filter monitoring taken under s. NR 810.38(2) for at least 3 years. Systems shall report that they have conducted individual filter turbidity monitoring under s. NR 809.765 within 10 days after the end of each month the system serves water to the public. Systems shall report individual filter turbidity measurement results taken under s. NR 810.38(2) within 10 days after the end of each month the system serves water to the public only if measurements demonstrate one or more of the conditions in pars. (a) to (d). Systems that use lime softening may apply to the department for alternative exceedance levels for the levels specified in pars. (a) to (d) if they can demonstrate that higher turbidity levels in individual filters are due to lime carryover only and not due to degraded filter performance.

(a) For any individual filter that has a measured turbidity level of greater than 1.0 NTU in 2 consecutive measurements taken 15 minutes apart, the system shall report the filter number, the turbidity measurement, and the dates on which the exceedance occurred. In addition, the system shall either produce a filter profile for the filter within 7 days of the exceedance, if the system is not able to identify an obvious reason for the abnormal filter performance, and report that the profile has been produced or report the obvious reason for the exceedance.

(b) For any individual filter that has a measured turbidity level of greater than 0.5 NTU in 2 consecutive measurements taken 15 minutes apart at the end of the first 4 hours of continuous filter operation after the filter has been backwashed or otherwise taken

offline, the system shall report the filter number, the turbidity, and the dates on which the exceedance occurred. In addition, the system shall either produce a filter profile for the filter within 7 days of the exceedance, if the system is not able to identify an obvious reason for the abnormal filter performance, and report that the profile has been produced or report the obvious reason for the exceedance.

(c) For any individual filter that has a measured turbidity level of greater than 1.0 NTU in 2 consecutive measurements taken 15 minutes apart at any time in each of 3 consecutive months, the system shall report the filter number, the turbidity measurement, and the dates on which the exceedance occurred. In addition, the system shall conduct a self-assessment of the filter within 14 days of the exceedance and report that the self-assessment was conducted. The self-assessment shall consist of at least the following components: assessment of filter performance; development of a filter profile; identification and prioritization of factors limiting filter performance; assessment of the applicability of corrections; and preparation of a filter self-assessment report.

(d) For any individual filter that has a measured turbidity level of greater than 2.0 NTU in 2 consecutive measurements taken 15 minutes apart at any time in each of 2 consecutive months, the system shall report the filter number, the turbidity measurement, and the dates on which the exceedance occurred. In addition, the system shall arrange for the conduct of a comprehensive performance evaluation by the department or a third party approved by the department no later than 30 days following the exceedance and have the evaluation completed and submitted to the department no later than 90 days following the exceedance.

(e) The following turbidity exceedances shall be reported as follows:

1. If at any time the turbidity exceeds 1 NTU on representative samples of filtered water in a system using conventional filtration treatment or direct filtration, the system shall inform the department as soon as possible, but no later than the end of the next business day.

2. If at any time the turbidity in representative samples of filtered water exceeds the maximum level set by the department under s. NR 810.29(5) for filtration technologies other than conventional filtration treatment, direct filtration, slow sand filtration or diatomaceous earth filtration, the system shall inform the department as soon as possible, but no later than the end of the next business day.

(9) WATERBORNE DISEASE REPORTING. Each water supplier, upon discovering that a waterborne disease outbreak potentially attributable to the water suppliers water system has occurred, shall report that occurrence to the department as soon as possible, but no later than by the end of the next business day.

(10) ADDITIONAL RECORD REPORTING. Upon the request of the department, the supplier of water shall submit to the department copies of any records required to be maintained under s. NR 809.82 or copies of any documents then in existence which the department is entitled to inspect under the authority of s. 281.97, Stats.

(11) REPORTING FORMAT. The department may specify the format for reporting analytical results required under this chapter.

NR 809.82 Record maintenance. Any owner or operator of a public water system subject to the provisions of this chapter shall retain on the premises or at a convenient location near the premises the following records:

(1) ANALYTICAL RESULT RECORDS. Records of microbiological analyses and turbidity analyses made pursuant to chs. NR 810 and 811 and this chapter shall be kept for not less than 5 years. Records of chemical analyses made pursuant to chs. NR 810 and 811 and this chapter shall be kept for not less than 10 years. Actual laboratory reports may be kept, or data may be transferred to tabular summaries, provided that all of the following information is included:

(a) The date, place, and time of sampling, and the name of the person who collected the sample.

(b) Identification of the sample as to whether it was a routine distribution system sample, check sample, raw or process water sample or other special purpose sample.

(c) Date of analysis.

(d) Laboratory and person responsible for performing analysis.

(e) The analytical technique/method used.

(f) The results of the analysis.

(2) VIOLATION CORRECTION RECORDS. Records of action taken by the supplier of water to correct violations of this chapter shall be kept for a period of not less than 3 years after the last action taken with respect to the particular violation involved.

(3) SANITARY SURVEY RECORDS. Copies of any written reports, summaries or communications relating to sanitary surveys of the system conducted by the supplier of water, by a private consultant, or by any local, state or federal agency, shall be kept for a period of not less than 10 years after completion of the sanitary survey involved.

(4) CONDITIONAL WAIVER OR VARIANCE RECORDS. Records concerning a conditional waiver or variance granted to the system shall be kept for a period of not less than 5 years following the expiration of the conditional waiver or variance.

(5) LEAD AND COPPER CONTROL RECORDS. The owner or operator of any system subject to the requirements of subch. II shall retain on the premises original records of all sampling data and analyses, reports, surveys, letters, evaluations, schedules, department determinations, and any other information required by ss. NR 809.542 to 809.549. Each water system owner or operator shall retain the records for no less than 12 years.

(6) PUBLIC NOTICE RECORDS. The department shall keep copies of public notices issued pursuant to subch. VII and certifications made to the department pursuant to s. NR 809.80 for 3 years after issuance.

(7) MONITORING PLAN RECORDS. Copies of monitoring plans developed pursuant to this chapter shall be kept for the same period of time as the records of analyses taken under the plan are required to be kept under sub. (1), except as specified elsewhere in this chapter.

NR 809.83 Consumer confidence report applicability and deadlines. (1) PURPOSE AND APPLICABILITY. Suppliers of water to community water systems shall deliver to their customers an annual report containing information on the quality of the water and the characterization of risks, if any, from exposure to contaminants detected in the drinking water delivered by their water system. The report shall be written in an accurate and understandable manner.

(a) Customers under this paragraph are defined as billing units or service connections to which water is delivered by a community water system.

(b) Detected under this paragraph refers to all contaminants identified in subch. I and means any quantity reported by a safe drinking water certified laboratory.

(2) DEADLINES. (a) Each existing community water system shall deliver its report by July 1 annually. Reports shall contain data collected during, or prior to, the previous calendar year.

(b) A new community water system shall deliver its first report by July 1 of the year after its first full calendar year in operation and annually thereafter.

(c) A community water system that sells water to another community water system shall deliver the applicable information required in s. NR 809.833 to the buyer system by one of the following dates:

1. No later than April 1 annually.

2. On a date mutually agreed upon by the seller and the purchaser, and specifically included in a contract between the parties.

NR 809.833 Content of consumer confidence reports. Each community water system shall provide to its customers an annual report that contains all of the information specified in this section and s. NR 809.835.

(1) INFORMATION ON THE SOURCE OF THE WATER DELIVERED. Each report shall identify the sources of the water delivered by the community water system by providing information on all of the following:

(a) The type of the water, e.g., surface water, groundwater.

(b) The commonly used name, if any, and location of the bodies of water.

(c) If a source water assessment has been completed, the report shall notify consumers of the availability of this information and the means to obtain it. In addition, systems are encouraged to highlight in the report significant sources of contamination in the source water area if they have readily available information. If a system has received a source water assessment from the department, the report shall include a brief summary of the system's susceptibility to potential sources of contamination, using language provided by the department or written by the water system owner or operator.

(2) DEFINITIONS. (a) Each report shall include all of the following definitions:

1. Maximum contaminant level goal or MCLG: The level of a contaminant in drinking water below which there is no known or expected risk to health. MCLGs allow for a margin of safety.

2. Maximum contaminant level or MCL: The highest level of a contaminant that is allowed in drinking water. MCLs are set as close to the MCLGs as feasible using the best available treatment technology.

(b) A report for a community water system operating under a variance or an exemption issued under subch. VIII shall include the following definition, "Variances and Exemptions: state or EPA permission not to meet an MCL or a treatment technique under certain conditions."

(c) A report which contains data on contaminants which EPA regulates using any of the following terms shall include the applicable definitions:

1. "Treatment technique: A required process intended to reduce the level of a contaminant in drinking water."

2. "Action level: The concentration of a contaminant which, if exceeded, triggers treatment or other requirements which a water system shall follow."

3. “Maximum residual disinfectant level goal or MRDLG: The level of a drinking water disinfectant below which there is no known or expected risk to health. MRDLGs do not reflect the benefits of the use of disinfectants to control microbial contaminants.”

4. “Maximum residual disinfectant level or MRDL: The highest level of a disinfectant allowed in drinking water. There is convincing evidence that addition of a disinfectant is necessary for control of microbial contaminants.”

(3) INFORMATION ON DETECTED CONTAMINANTS. With the exception of *Cryptosporidium*, reports shall contain the following information in the specified format, for regulated contaminants subject to a MCL, action level, maximum residual disinfectant level, or treatment technique, unregulated contaminants for which monitoring is required under subch. I, and disinfection by-products and microbial contaminants for which monitoring is required under subchs. III:

(a) The data relating to these contaminants shall be displayed in one table or in several adjacent tables. Any additional monitoring results which a community water system chooses to include in its report shall be displayed separately.

(b) The data shall be derived from data collected to comply with EPA and department monitoring and analytical requirements during calendar year 1998 for the first report and subsequent calendar years thereafter except that:

1. If a system is allowed to monitor for regulated contaminants less often than once a year, the tables shall include the date and results of the most recent sampling and the report shall include a brief statement indicating that the data presented in the report are from the most recent testing done in accordance with the regulations. No data older than 5 years need be included.

2. Results of monitoring in compliance with requirements issued under 40 CFR Sub. D, part 141.142 and 141.143 under the information collection rule need only be included for 5 years from the date of last sample or until any of the detected contaminants becomes regulated and subject to routine monitoring requirements, whichever comes first.

(c) For detected regulated contaminants, listed in Appendix A to this subchapter, the tables shall contain all of the following:

1. The MCL for that contaminant expressed as a number equal to or greater than 1.0, as provided in Appendix A to this subchapter.

2. The MCLG for that contaminant expressed in the same units as the MCL.

3. If there is no MCL for a detected contaminant, the table shall indicate that there is a treatment technique, or specify the action level, applicable to that contaminant, and the report shall include the definitions for treatment technique or action level, or both, as appropriate, specified in this paragraph.

4. For contaminants subject to an MCL, except turbidity and total coliforms, the highest contaminant level used to determine compliance with requirements of this chapter and the range of detected levels as follows:

a. When compliance with the MCL is determined annually or less frequently: the highest detected level at any sampling point and the range of detected levels expressed in the same units as the MCL.

b. When compliance with the MCL is determined by calculating a running annual average of all samples taken at a sampling point: the highest average of any of the sampling points and the range of all sampling points expressed in the same units as the MCL.

c. When compliance with the MCL is determined on a system-wide basis by calculating a running annual average of all samples at all sampling points: the average and range of detection expressed in the same units as the MCL.

Note: When rounding of results to determine compliance with the MCL is allowed by the regulations, rounding should be done prior to multiplying the results by the factor listed in Appendix A of this subchapter.

5. For turbidity:

a. When it is reported pursuant to s. NR 810.29, the highest average monthly value.

b. When it is reported pursuant to s. NR 810.29, the highest monthly value. The report should include an explanation of the reasons for measuring turbidity.

c. When it is reported pursuant to s. NR 810.29, the highest single measurement and the lowest monthly percentage of samples meeting the turbidity limits specified in s. NR 810.29 for the filtration technology being used. The report should include an explanation of the reasons for measuring turbidity.

6. For lead and copper: the 90th percentile value of the most recent round of sampling and the number of sampling sites exceeding the action level.

7. For total coliform, one of the following:

a. The highest monthly number of positive samples for systems collecting fewer than 40 samples per month.

b. The highest monthly percentage of positive samples for systems collecting at least 40 samples per month.

8. For fecal coliform, the total number of positive samples.

9. The likely sources of detected contaminants to the best of the water system owner or operator's knowledge. Specific information regarding contaminants may be available in sanitary surveys and source water assessments, and should be used when available to the water system owner or operator. If the water system owner or operator lacks specific information on the likely source, the report shall include one or more of the typical sources for that contaminant listed in Appendix A to this subchapter that are most applicable to the system.

(d) If a community water system distributes water to its customers from multiple hydraulically independent distribution systems that are fed by different raw water sources, the table should contain a separate column for each service area and the report should identify each separate distribution system. Alternatively, systems could produce separate reports tailored to include data for each service area.

(e) The tables shall clearly identify any data indicating violations of MCLs or treatment techniques and the report shall contain a clear and readily understandable explanation of the violation including: the length of the violation, the potential adverse health effects, and actions taken by the system to address the violation. To describe the potential health effects, the system shall use the relevant language of Appendix A to this subchapter.

(f) For detected unregulated contaminants for which monitoring is required, except *Cryptosporidium*, the tables shall contain the average and range at which the contaminant was detected. The report may include a brief explanation of the reasons for monitoring for unregulated contaminants.

(4) INFORMATION ON CRYPTOSPORIDIUM, RADON AND OTHER CONTAMINANTS. (a) If the system has performed any monitoring for *Cryptosporidium*, including monitoring performed to satisfy the requirements of 40 CFR sub. D, part 141, s. 141.143 (information collection rule), which indicates that *Cryptosporidium* may be present in the source water or the finished water, the report shall include all of the following:

1. A summary of the results of the monitoring.
2. An explanation of the significance of the results.

(b) If the system has performed any monitoring for radon which indicates that radon may be present in the finished water, the report shall include all of the following:

1. The results of the monitoring.
2. An explanation of the significance of the results.

(c) If the system has performed additional monitoring which indicates the presence of other contaminants in the finished water, the report shall include all of the following:

1. The results of the monitoring.
2. An explanation of the significance of the results noting the existence of a health advisory or a proposed regulation.

Note: To determine the significance of the results it is recommended that systems call the Safe Drinking Water Hotline at 800–426–4791.

(5) COMPLIANCE WITH ALL DRINKING WATER REGULATIONS. In addition to the requirements of sub. (3) (f), the report shall note any violation that occurred during the year covered by the report of a requirement listed in this subsection. The report also shall include a clear and readily understandable explanation of the violation, any potential adverse health effects, and the steps the system has taken to correct the violation. All of the following violations shall be included:

(a) Failure to comply with requirements for monitoring and reporting of compliance data.

(b) For systems which have failed to install adequate filtration or disinfection equipment or processes, or have had a failure of the equipment or processes which constitutes a violation, the report shall include the following language as part of the explanation of potential adverse health effects. Inadequately treated water may contain disease-causing organisms. These organisms include bacteria, viruses and parasites, which can cause symptoms such as nausea, cramps, diarrhea and associated headaches.

(c) Lead and copper control requirements that are prescribed by subch. II. For systems that fail to take one or more actions prescribed by s. NR 809.541 (4), 809.542, 809.543, 809.544 or 809.545, the report shall include the applicable language of Appendix A to this subchapter for lead, copper or both.

(d) Treatment techniques for Acrylamide and Epichlorohydrin that are prescribed by subch. I. For systems that violate the requirements of s. NR 809.26 (4), the report shall include the relevant language from Appendix A to this subchapter.

(e) Failure to comply with required recordkeeping of compliance data.

(f) Failure to comply with special monitoring requirements prescribed by ss. NR 809.13 and 809.26.

(g) Violation of the terms of a variance, an exemption or an administrative or judicial order.

(6) EXEMPTIONS. If a system is operating under the terms of a conditional waiver or variance issued under subch. VIII, the report shall contain all of the following:

(a) An explanation of the reasons for the variance or exemption.

(b) The date on which the variance or exemption was issued.

(c) A brief status report on the steps the system is taking to install treatment, find alternative sources of water or otherwise comply with the terms and schedules of the variance or exemption.

(d) A notice of any opportunity for public input in the review, or renewal, of the variance or exemption.

(7) ADDITIONAL INFORMATION. (a) C*ontaminants in drinking water*. The report shall contain a brief explanation regarding contaminants, which may reasonably be expected to be found in drinking water including bottled water. This explanation may include the language of subds. 1. to 3. or systems may use their own comparable language. The report also shall include the language of subd. 4.

1. "The sources of drinking water, both tap water and bottled water, include rivers, lakes, streams, ponds, reservoirs, springs and wells. As water travels over the surface of the land or to the ground, it dissolves naturally occurring minerals and, in some cases, radioactive material, and can pick up substances resulting from the presence of animals or from human activity."

2. "Contaminants that may be present in source water include:"

a. "Microbial contaminants, such as viruses and bacteria, which may come from sewage treatment plants, septic systems, agricultural livestock operations and wildlife."

b. "Inorganic contaminants, such as salts and metals, which can be naturally-occurring or result from urban stormwater runoff, industrial or domestic wastewater discharges, oil and gas production, mining or farming."

c. "Pesticides and herbicides, which may come from a variety of sources such as agriculture, urban stormwater runoff and residential uses."

d. "Organic chemical contaminants, including synthetic and volatile organic chemicals, which are by-products of industrial processes and petroleum production, and can also come from gas stations, urban stormwater runoff and septic systems."

e. "Radioactive contaminants, which can be naturally occurring or the result of oil and gas production and mining activities."

3. "In order to ensure that tap water is safe to drink, EPA prescribes regulations that limit the amount of certain contaminants in water provided by public water systems. FDA regulations establish limits for contaminants in bottled water, which shall provide the same protection for public health."

4. "Drinking water, including bottled water, may reasonably be expected to contain at least small amounts of some contaminants. The presence of contaminants does not necessarily indicate that water poses a health risk. More information about contaminants and potential health effects can be obtained by calling the environmental protection agency's safe drinking water hotline (800-426-4791)."

(b) *Owner contact information.* The report shall include the telephone number of the owner, operator or designee of the community water system as a source of additional information concerning the report.

(c) *Non-English translations.* In communities where non-English speaking residents comprise a significant portion of the population served, the report should contain information in the appropriate language or languages regarding the importance of the report, or contain a telephone number or address where the residents may contact the system to obtain a translated copy of the report or assistance in the appropriate language. In communities where a specific non-English speaking group comprises at least 5% of the population of the community served, the report shall be translated into that language.

(d) *Public participation oppourtunities.*The report shall include information, e.g., time and place of regularly scheduled board meetings, about opportunities for public participation in decisions that may affect the quality of the water.

(e) *Additional public education.* The systems may include additional information as they deem necessary for public education consistent with, and not detracting from, the purpose of the report.

(f) *Systems with significant deficencies or E. coli positives under s. NR 809.325.*

1. Any groundwater system that receives notice from the department of a significant deficiency or notice from a laboratory of a fecal indicator-positive groundwater source sample required under s. NR 809.325(2), that is not invalidated by the department under s. NR 809.323(2), must inform its customers of any significant deficiency that is uncorrected at the time of the next report or of any fecal indicator-positive groundwater source sample in the next report.

2. The system must continue to inform the public annually until the department determines that particular significant deficiency is corrected or the fecal contamination in the groundwater source is addressed under s. NR 809.327(1). Each report must include all the following applicable elements:

a. The nature of the particular significant deficiency or the source of the fecal contamination, if the source is known, and the date the significant deficiency was identified by the department or the dates of the fecal indicator-positive groundwater source samples.

b. If the fecal contamination in the groundwater source has been addressed under s. NR 809.327(1) and the date of such action.

c. For each significant deficiency or fecal contamination in the groundwater source that has not been addressed under s. NR 809.327(1) , the department approved plan and schedule for correction, including interim measures, progress to date, and any interim measures completed.

d. If the system receives notice of a fecal indicator-positive groundwater source sample that is not invalidated by the State under s. NR 809.323(2), the potential health effects using the health effects language of Appendix A of subchapt. V.

3. If directed by the department, a system with significant deficiencies that have been corrected before the next report is issued must inform its customers of the significant deficiency, how the deficiency was corrected, and the date of correction under subd. 1.

NR 809.835 Required additional health information for consumer confidence reports. (1) ADDITIONAL HEALTH INFORMATION FOR VULNERABLE POPULATIONS. All reports shall prominently display the following language: “Some people may be more vulnerable to contaminants in drinking water than the general population. Immuno-compromised persons such as persons with cancer undergoing chemotherapy, persons who have undergone organ transplants, people with HIV/AIDS or other immune system

disorders, some elderly, and infants can be particularly at risk from infections. These people should seek advice about drinking water from their health care providers. EPA/CDC guidelines on appropriate means to lessen the risk of infection by Cryptosporidium and other microbial contaminants are available from the environmental protection agency's safe drinking water hotline at 800-426-4791."

(2) ADDITIONAL ARSENIC INFORMATION. Beginning July 1, 2002 a system that detects arsenic above 0.005 mg/L and up to and including 0.01 mg/L:

(a) Shall include in its report a short information statement about arsenic, using language such as: While your drinking water meets EPA's standard for arsenic, it does contain low levels of arsenic. EPA's standard balances the current understanding of arsenic's possible health effects against the costs of removing arsenic from drinking water. EPA continues to research the health effects of low levels of arsenic, which is a mineral known to cause cancer in humans at high concentrations and is linked to other health effects such as skin damage and circulatory problems.

(b) May write its own educational statement, but only in consultation with the department.

(3) ADDITIONAL LEAD INFORMATION. Systems which detect lead above the action level in more than 5%, but fewer that 10%, of homes sampled:

(a) Shall include a short informational statement about the special impact of lead on children using language such as: "Infants and young children are typically more vulnerable to lead in drinking water than the general population. It is possible that lead levels at your home may be higher than at other homes in the community as a result of materials used in your home's plumbing. If you are concerned about elevated lead levels in your home's water, you may wish to have your water tested and flush your tap for 30 seconds to 2 minutes before using tap water. Additional information is available from the environmental protection agency's safe drinking water hotline (800-426-4791)."

(b) May write its own educational statement, but only in consultation with the department.

NR 809.837 Consumer confidence report delivery and recordkeeping. (1) GENERAL DELIVERY REQUIREMENTS. Except as provided in sub. (7), each community water system shall mail or otherwise directly deliver one copy of the report to each customer.

(2) DELIVERY TO CONSUMERS THAT ARE NOT BILLED. The system shall make a good faith effort to reach consumers who do not get water bills, using means recommended by the department. EPA expects that an adequate good faith effort will be tailored to the consumers who are served by the system but are not bill-paying customers, such as renters or workers. A good faith effort to reach consumers would include a mix of methods appropriate to the particular system such as: Posting the reports on the Internet; mailing to postal patrons in metropolitan areas; advertising the availability of the report in the news media; publication in a local newspaper; posting in public places such as cafeterias or lunch rooms of public buildings; delivery of multiple copies for distribution by single-biller customers such as apartment buildings or large private employers; delivery to community organizations.

(3) DELIVERY TO THE DEPARTMENT. No later than the date the system is required to distribute the report to its customers, each community water system shall mail a copy of

the report to the department, followed within 3 months by a certification that the report has been distributed to customers, and that the information is correct and consistent with the compliance monitoring data previously submitted to the department.

(4) DELIVERY TO OTHER AGENCIES. No later than the date the system is required to distribute the report to its customers, each community water system shall deliver the report to any other agency or clearinghouse identified by the department.

(5) REPORT AVAILABILITY. Each community water system shall make its reports available to the public upon request.

(6) INTERNET POSTING. Each community water system serving 100,000 or more persons shall post its current year's report to a publicly accessible site on the Internet.

(7) GOVERNOR'S WAIVER OF REPORT DELIVERY. The governor of Wisconsin or the governor's designee may waive the requirement of par. (1) for community water systems serving fewer than 10,000 persons.

(a) A system that has received a waiver under this subsection shall do all of the following:

1. Publish the reports in one or more local newspapers serving the area in which the system is located.

2. Inform the customers that the reports will not be mailed, either in the newspapers in which the reports are published or by other means approved by the department.

3. Make the reports available to the public upon request.

(b) A system serving 500 or fewer persons that has received a waiver under this subsection may forego the requirements of par. (a) 1. and 2. if they provide notice at least once per year to their customers by mail, door-to-door delivery or by posting in an appropriate location that the report is available upon request.

(8) RETENTION OF REPORTS. Any systems subject to this subchapter shall retain copies of its consumer confidence report for no less than 3 years.

Appendix A to Subchapter V
Consumer Confidence Report Information

Contaminan (units)	**Traditional MCL in mg/L**	**To convert for CCR; multiply by**	**MCL in CCR units**	**MCLG**	**Major sources in drinking water**	**Health effects language**
Microbiological contaminants:						
Total Coliform Bacteria	MCL: (systems that collect ≥40 samples/ month) 5% of monthly samples are positive; (systems that collect <40 samples/month) 1 positive monthly sample.	N/A	MCL: (systems that collect ≥40 samples/ month) 5% of monthly samples are positive; (systems that collect <40 samples/ month) 1 positive monthly sample.	0	Naturally present in the environment.	Coliforms are bacteria that are naturally present in the environment and are used as an indicator that other, potentially-harmful, bacteria may be present. Coliforms were found in more samples than allowed and this was a warning of potential problems.
Fecal coliform and E. coli	0	N/A	0	0	Human and animal fecal waste.	Fecal coliforms and E. coli are bacteria whose presence indicates that the water may be contaminated with human or animal wastes. Microbes in these wastes can cause short-term effects, such as diarrhea, cramps, nausea, headaches, or other symptoms. They may pose a special health risk for infants, young children, some of the elderly, and people with

						severely compromised immune systems.
Total organic carbon (ppm)	TT	N/A	TT	N/A	Naturally present in the environment.	Total organic carbon has no health effects. However, total organic carbon provides a medium for the formation of disinfection byproducts. Their byproducts include trihalomethanes and haloacetic acids. Drinking water containing these byproducts in excess of the MCL may lead to adverse health effects, liver or kidney problems, or nervous system effects, and may lead to an increased risk of getting cancer.
Turbidity (NTU)	TT	N/A	TT	N/A	Soil runoff.	Turbidity has no health effects. However, turbidity can interfere with disinfection and provide a medium for microbial growth. Turbidity may indicate the presence of disease-causing organisms. These organisms include bacteria, viruses, and parasites that can cause symptoms such as nausea, cramps, diarrhea and associated headaches.
Fecal Indicators: enterococci or coliphage	TT		TT	N/A	Human and animal fecal waste	Fecal indicators are microbes whose presence indicates that the water may be contaminated with human or animal wastes. Microbes in these wastes can cause short-term health effects, such as diarrhea, cramps, nausea, headaches, or other symptoms. They may

						pose a special health risk for infants, young children, some of the elderly, and people with severely compromised immune systems
Radioactive contaminants:						
Beta/photon emitters (mrem/yr)	4 mrem/yr	N/A	4	N/A	Decay of natural and man-made deposits.	Certain minerals are radioactive and may emit forms of radiation known as photons and beta radiation. Some people who drink water containing beta and photon emitters in excess of the MCL over many years may have an increased risk of getting cancer.
Alpha emitters (pCi/l)	15 pCi/l	N/A	15	N/A	Erosion of natural deposits.	Certain minerals are radioactive and may emit a form of radiation known as alpha radiation. Some people who drink water containing alpha emitters in excess of the MCL over many years may have an increased risk of getting cancer.
Combined radium (pCi/l)	5 pCi/l	N/A	5	N/A	Erosion of natural deposits.	Some people who drink water containing radium 226 or 228 in excess of the MCL over many years may have an increased risk of getting cancer.
Uranium (ug/1)	30 ug/1	N/A	30	0	Erosion of natural deposits.	Some people who drink water containing uranium in excess of the MCL over many years may have an increased risk of getting cancer or kidney toxicity.
Inorganic contaminants:						
Antimony (ppb)	.006	1000	6	6	Discharge from petroleum	Some people who drink water containing antimony well in excess

					refineries, fire retardants, ceramics, electronics, solder.	of the MCL over many years could experience increases in blood cholesterol and decreases in blood sugar.
Arsenic (ppb)	0.010[1]	1000	10[1]	0[1]	Erosion of natural deposits; Runoff from orchards; Runoff from glass and electronics production wastes.	Some people who drink water containing arsenic in excess of the MCL over many years could experience skin damage or problems with their circulatory system, and may have an increased risk of getting cancer.
Asbestos (MFL)	7 MFL	N/A	7	7	Decay of asbestos cement water; Erosion of natural deposits.	Some people who drink water containing asbestos in excess of the MCL over many years may have an increased risk of developing benign intestinal polyps.
Barium (ppm)	2	N/A	2	2	Discharge of drilling wastes; Discharge from metal refineries; Erosion of natural deposits.	Some people who drink water containing barium in excess of the MCL over many years could experience an increase in their blood pressure.
Beryllium (ppb)	.004	1000	4	4	Discharge from metal refineries and coal-burning factories; Discharge from electrical, aerospace, and defense industries.	Some people who drink water containing beryllium well in excess of the MCL over many years could develop intestinal lesions.
Bromate (ppb)	.010	1000	10	0	By-product of drinking	Some people who drink water containing bromate

					water disinfection.	in excess of the MCL over many years may have an increased risk of getting cancer.
Cadmium (ppb)	.005	1000	5	5	Corrosion of galvanized pipes; Erosion of natural deposits; Discharge from metal refineries; Runoff from waste batteries and paints.	Some people who drink water containing cadmium in excess of the MCL over many years could experience kidney damage.
Chloramines (ppm)	MRDL = 4	N/A	MRDL = 4	MRDLG = 4	Water additive used to control microbes.	Some people who use water containing chloramines well in excess of the MRDL could experience irritating effects to their eyes and nose. Some people who drink water containing chloramines well in excess of the MRDL could experience stomach discomfort or anemia.
Chlorine (ppm)	MRDL = 4	N/A	MRDL = 4	MRDLG = 4	Water additive used to control microbes.	Some people who use water containing chlorine well in excess of the MRDL could experience irritating effects to their eyes and nose. Some people who drink water containing chlorine well in excess of the MRDL could experience stomach discomfort or anemia.
Chlorine dioxide (ppb)	MRDL = .8	1000	MRDL = 800	MRDLG = 800	Water additive used to control microbes.	Some infants and young children who drink water containing chlorine dioxide in excess of the MRDL could experience nervous system effects.

						Similar effects may occur in fetuses of pregnant women who drink water containing chlorine dioxide in excess of the MRDL. Some people may experience anemia.
Chlorite (ppm)	1	N/A	1	0.8	By-product of drinking water disinfection.	Some infants and young children who drink water containing chlorite in excess of the MCL could experience nervous system effects. Similar effects may occur in fetuses of pregnant women who drink water containing chlorite in excess of the MCL. Some people may experience anemia.
Chromium (ppb)	.1	1000	100	100	Discharge from steel and pulp mills; Erosion of natural deposits.	Some people who drink water containing chromium well in excess of the MCL over many years could experience allergic dermatitis.
Copper (ppm)	AL = 1.3	N/A	AL = 1.3	1.3	Corrosion of household plumbing systems; Erosion of natural deposits.	Copper is an essential nutrient, but some people who drink water containing copper in excess of the action level over a relatively short amount of time could experience gastrointestinal distress. Some people who drink water containing copper in excess of the action level over many years could suffer liver or kidney damage. People with Wilson's Disease should consult their personal doctor.
Cyanide	.2	1000	200	200	Discharge	Some people who drink

(ppb)					from steel/metal factories; Discharge from plastic and fertilizer factories.	water containing cyanide well in excess of the MCL over many years could experience nerve damage or problems with their thyroid.
Fluoride (ppm)	4	N/A	4	4	Erosion of natural deposits; Water additive which promotes strong teeth; Discharge from fertilizer and aluminum factories.	Some people who drink water containing fluoride in excess of the MCL over many years could get bone disease, including pain and tenderness of bones. Fluoride in drinking water at half the MCL or more may cause mottling of children's teeth, usually in children less than 9 years old. Mottling, also known as dental fluorosis, may include brown staining and/or pitting of the teeth, and occurs only in developing teeth before they erupt from the gums.
Lead (ppb)	AL = .015	1000	AL = 15	0	Corrosion of household plumbing system; Erosion of natural deposits.	Infants and children who drink water containing lead in excess of the action level could experience delays in their physical or mental development. Children could show slight deficits in attentions span and learning abilities. Adults who drink this water over many years could develop kidney problems or high blood pressure.
Mercury [inorganic] (ppb)	.002	1000	2	2	Erosion of natural deposits; Discharge from	Some people who drink water containing inorganic mercury well in excess of the MCL over many years could

					refineries and factories; Runoff from landfills; Runoff from cropland.	experience kidney damage.
Nitrate (ppm)	10	N/A	10	10	Runoff from fertilizer use; Leaching from septic tanks, sewage; Erosion of natural deposits.	Infants below the age of 6 months who drink water containing nitrate in excess of the MCL could become seriously ill and, if untreated, may die. Symptoms include shortness of breath and blue baby syndrome.
Nitrite (ppm)	1	N/A	1	1	Runoff from fertilizer use; Leaching from septic tanks, sewage; Erosion of natural deposits.	Infants below the age of 6 months who drink water containing nitrite in excess of the MCL could become seriously ill and, if untreated, may die. Symptoms include shortness of breath and blue baby syndrome.
Selenium (ppb)	.05	1000	50	50	Discharge from petroleum and metal refineries; Erosion of natural deposits; Discharge from mines.	Selenium is an essential nutrient. However, some people who drink water containing selenium in excess of the MCL over many years could experience hair or fingernail loss, numbness in fingers or toes, or problems with their circulation.
Thallium (ppb)	.002	1000	2	0.5	Leaching from ore-processing sites; Discharge from electronic, glass, and	Some people who drink water containing thallium in excess of the MCL over many years could experience hair loss, changes in their blood, or problems with their kidneys, intestines, or

					drug factories.	liver.
Synthetic organic contaminants including pesticides and herbicides:						
2,4-D (ppb)	.07	1000	70	70	Runoff from herbicide used on row crops.	Some people who drink water containing the weed killer 2,4-D well in excess of the MCL over many years could experience problems with their kidneys, liver, or adrenal glands.
2,4,5-TP [Silvex] (ppb)	.05	1000	50	50	Residue of banned herbicide.	Some people who drink water containing silvex in excess of the MCL over many years could experience liver problems.
Acrylamide	TT	N/A	TT	0	Added to water during sewage/wastewater treatment.	Some people who drink water containing high levels of acrylamide over a long period of time could have problems with their nervous system or blood, and may have an increased risk of getting cancer.
Alachlor (ppb)	.002	1000	2	0	Runoff from herbicide used on row crops.	Some people who drink water containing alachlor in excess of the MCL over many years could have problems with their eyes, liver, kidneys, or spleen, or experience anemia, and may have an increased risk of getting cancer.
Atrazine (ppb)	.003	1000	3	3	Runoff from herbicide used on row crops.	Some people who drink water containing atrazine well in excess of the MCL over many years could experience problems with their cardiovascular system or reproductive difficulties.
Benzo(a)pyrene [PAH] (nanograms/l)	.0002	1,000,000	200	0	Leaching from lining of water storage	Some people who drink water containing benzo(a)pyrene in excess of the MCL over many

					tanks and distribution lines.	years may experience reproductive difficulties and may have an increased risk of getting cancer.
Carbofuran (ppb)	.04	1000	40	40	Leaching of soil fumigant used on rice and alfalfa.	Some people who drink water containing carbofuran in excess of the MCL over many years could experience problems with their blood, or nervous or reproductive systems.
Chlordane (ppb)	.002	1000	2	0	Residue of banned termiticide.	Some people who drink water containing chlordane in excess of the MCL over many years could experience problems with their liver or nervous system, and may have an increased risk of getting cancer.
Dalapon (ppb)	.2	1000	200	200	Runoff from herbicide used on rights of way.	Some people who drink water containing dalapon well in excess of the MCL over many years could experience minor kidney changes.
Di(2-ethylhexyl) adipate (ppb)	.4	1000	400	400	Discharge from chemical factories.	Some people who drink water containing di (2-ethylhexyl) adipate well in excess of the MCL over many years could experience toxic effects such as weight loss, liver enlargement or possible reproductive difficulties.
Di(2-ethylhexyl) phthalate (ppb)	.006	1000	6	0	Discharge from rubber and chemical factories.	Some people who drink water containing di (2-ethylhexyl) phthalate well in excess of the MCL over many years may have problems with their liver, or experience reproductive difficulties, and may have an

						increased risk of getting cancer.
Dibromochloropropane (ppt)	.0002	1,000,000	200	0	Runoff/leaching from soil fumigant used on soybeans, cotton, pineapples, and orchards.	Some people who drink water containing DBCP in excess of the MCL over many years could experience reproductive problems and may have an increased risk of getting cancer.
Dinoseb (ppb)	.007	1000	7	7	Runoff from herbicide used on soybeans and vegetables.	Some people who drink water containing dinoseb well in excess of the MCL over many years could experience reproductive difficulties.
Diquat (ppb)	.02	1000	20	20	Runoff from herbicide use.	Some people who drink water containing diquat in excess of the MCL over many years could get cataracts.
Dioxin [2,3,7,8-TCDD] (ppq)	.00000003	1,000,000,000	30	0	Emissions from waste incineration and other combustion; Discharge from chemical factories.	Some people who drink water containing dioxin in excess of the MCL over many years could experience reproductive difficulties and may have an increased risk of getting cancer.
Endothall (ppb)	.1	1000	100	100	Runoff from herbicide use.	Some people who drink water containing endothall in excess of the MCL over many years could experience problems with their stomach or intestines.
Endrin (ppb)	.002	1000	2	2	Residue of banned insecticide.	Some people who drink water containing endrin in excess of the MCL over many years could experience liver problems.
Epichlorohydrin	TT	N/A	TT	0	Discharge from	Some people who drink water containing high

					industrial chemical factories; An impurity of some water treatment chemicals.	levels of epichlorohydrin over a long period of time could experience stomach problems, and may have an increased risk of getting cancer.
Ethylene dibromide (ppt)	.00005	1,000,000	50	0	Discharge from petroleum refineries.	Some people who drink water containing ethylene dibromide in excess of the MCL over many years could experience problems with their liver, stomach, reproductive systems, or kidneys, and may have an increased risk of getting cancer.
Glyphosate (ppb)	.7	1000	700	700	Runoff from herbicide use.	Some people who drink water containing glyphosate in excess of the MCL over many years could experience problems with their kidneys or reproductive difficulties.
Heptachlor (ppt)	.0004	1,000,000	400	0	Residue of banned pesticide.	Some people who drink water containing heptachlor in excess of the MCL over many years could experience liver damage and may have an increased risk of getting cancer.
Heptachlor epoxide (ppt)	.0002	1,000,000	200	0	Breakdown of heptachlor.	Some people who drink water containing heptachlor epoxide in excess of the MCL over many years could experience liver damage, and may have an increased risk of getting cancer.
Hexachloro benzene (ppb)	.001	1000	1	0	Discharge from metal refineries	Some people who drink water containing hexachlorobenzene in

					and agricultural chemical factories.	excess of the MCL over many years could experience problems with their liver or kidneys, or adverse reproductive effects, and may have an increased risk of getting cancer.
Hexachlorocyclopentadiene (ppb)	.05	1000	50	50	Discharge from chemical factories.	Some people who drink water containing hexachlorocyclopentadiene well in excess of the MCL over many years could experience problems with their kidneys or stomach.
Lindane (ppt)	.0002	1,000,000	200	200	Runoff/leaching from insecticide used on cattle, lumber and gardens.	Some people who drink water containing lindane in excess of the MCL over many years could experience problems with their kidneys or liver.
Methoxychlor (ppb)	.04	1000	40	40	Runoff/leaching from insecticide used on fruits, vegetables, alfalfa and livestock.	Some people who drink water containing methoxychlor in excess of the MCL over many years could experience reproductive difficulties.
Oxamyl [Vydate] (ppb)	.2	1000	200	200	Runoff/leaching from insecticide used on apples, potatoes and tomatoes.	Some people who drink water containing oxamyl in excess of the MCL over many years could experience slight nervous system effects.
PCBs [Polychlorinatedbiphenyls] (ppt)	.0005	1,000,000	500	0	Runoff from landfills; Discharge of waste chemicals.	Some people who drink water containing PCBs in excess of the MCL over many years could experience changes in their skin, problems with their thymus gland, immune deficiencies, or

						reproductive or nervous system difficulties, and may have an increased risk of getting cancer.
Pentachloro phenol (ppb)	.001	1000	1	0	Discharge from wood preserving factories.	Some people who drink water containing pentachlorophenol in excess of the MCL over many years could experience problems with their liver or kidneys, and may have an increased risk of getting cancer.
Picloram (ppb)	.5	1000	500	500	Herbicide runoff.	Some people who drink water containing picloram in excess of the MCL over many years could experience problems with their liver.
Simazine (ppb)	.004	1000	4	4	Herbicide runoff.	Some people who drink water containing simazine in excess of the MCL over many years could experience problems with their blood.
Toxaphene (ppb)	.003	1000	3	0	Runoff/leac hing from insecticide used on cotton and cattle.	Some people who drink water containing toxaphene in excess of the MCL over many years could have problems with their kidneys, liver, or thyroid, and may have an increased risk of getting cancer.
Volatile organic contaminants:						
Benzene (ppb)	.005	1000	5	0	Discharge from factories; Leaching from gas storage tanks and landfills.	Some people who drink water containing benzene in excess of the MCL over many years could experience anemia or a decrease in blood platelets, and may have an increased risk of getting cancer.
Carbon tetrachloride	.005	1000	5	0	Discharge from	Some people who drink water containing carbon

(ppb)					chemical plants and other industrial activities.	tetrachloride in excess of the MCL over many years could experience problems with their liver and may have an increased risk of getting cancer.
Chlorobenzene (ppb)	.1	1000	100	100	Discharge from chemical and agricultural chemical factories.	Some people who drink water containing chlorobenzene in excess of the MCL over many years could experience problems with their liver or kidneys.
o-Dichlorobenzene (ppb)	.6	1000	600	600	Discharge from industrial chemical factories.	Some people who drink water containing o-dichlorobenzene well in excess of the MCL over many years could experience problems with their liver, kidneys, or circulatory systems.
p-Dichlorobenzene (ppb)	.075	1000	75	75	Discharge from industrial chemical factories.	Some people who drink water containing p-dichlorobenzene in excess of the MCL over many years could experience anemia, damage to their liver, kidneys, or spleen, or changes in their blood.
1,2-Dichloroethane (ppb)	.005	1000	5	0	Discharge from industrial chemical factories.	Some people who drink water containing 1,2-dichloroethane in excess of the MCL over many years may have an increased risk of getting cancer.
1,1-Dichloroethylene (ppb)	.007	1000	7	7	Discharge from industrial chemical factories.	Some people who drink water containing 1,1-dichloroethylene in excess of the MCL over many years could experience problems with their liver.
cis-1,2-dichloroethylene (ppb)	.07	1000	70	70	Discharge from industrial	Some people who drink water containing cis-1,2-dichloroethylene in excess

					chemical factories.	of the MCL over many years could experience problems with their liver.
Trans-1,2-Dichloroethylene (ppb)	.1	1000	100	100	Discharge from industrial chemical factories.	Some people who drink water containing trans-1,2-dichloroethylene well in excess of the MCL over many years could experience problems with their liver.
Dichloromethane (ppb)	.005	1000	5	0	Discharge from pharmaceutical and chemical factories.	Some people who drink water containing dichlorormethane in excess of the MCL over many years could have liver problems and may have an increased risk of getting cancer.
1,2-dichloropropane (ppb)	.005	1000	5	0	Discharge from industrial chemical factories.	Some people who drink water containing 1,2-dichloropropane in excess of the MCL over many years may have an increased risk of getting cancer.
Ethylbenzene (ppb)	.7	1000	700	700	Discharge from petroleum refineries.	Some people who drink water containing ethylbenzene well in excess of the MCL over many years could experience problems with their liver or kidneys.
Haloacetic Acids (pbb)	.060	1000	60	N/A	By-product of drinking water disinfection.	Some people who drink water containing haloacetic acids in excess of the MCL over many years may have an increased risk of getting cancer.
Styrene (ppb)	.1	1000	100	100	Discharge from rubber and plastic factories; Leaching from landfills.	Some people who drink water containing styrene well in excess of the MCL over many years could have problems with their liver, kidneys, or circulatory system.

Tetrachloroethylene (ppb)	.005	1000	5	0	Discharge from factories and dry cleaners.	Some people who drink water containing tetrachloroethylene in excess of the MCL over many years could have problems with their liver, and may have an increased risk of getting cancer.
1,2,4-Trichlorobenzene (ppb)	.07	1000	70	70	Discharge from textile-finishing factories.	Some people who drink water containing 1,2,4-trichlorobenzene well in excess of the MCL over many years could experience changes in their adrenal glands.
1,1,1-Trichloroethane (ppb)	.2	1000	200	200	Discharge from metal degreasing sites and other factories.	Some people who drink water containing 1,1,1-trichloroethane in excess of the MCL over many years could experience problems with their liver, nervous system, or circulatory system.
1,1,2-Trichloroethane (ppb)	.005	1000	5	3	Discharge from industrial chemical factories.	Some people who drink water containing 1,1,2-trichloroethane well in excess of the MCL over many years could have problems with their liver, kidneys, or immune systems.
Trichloroethylene (ppb)	.005	1000	5	0	Discharge from metal degreasing sites and other factories.	Some people who drink water containing trichoroethylene in excess of the MCL over many years could experience problems with their liver and may have an increased risk of getting cancer.
TTHMs [Total trihalomethanes] (ppb)	0.10/0.80	1000	100/80	N/A	By-product of drinking water disinfection.	Some people who drink water containing trihalomethanes in excess of the MCL over many years may experience

						problems with their liver, kidneys, or central nervous systems, and may have an increased risk of getting cancer.
Toluene (ppm)	1	N/A	1	1	Discharge from petroleum factories.	Some people who drink water containing toluene well in excess of the MCL over many years could have problems with their nervous system, kidneys, or liver.
Vinyl Chloride (ppb)	.002	1000	2	0	Leaching from PVC piping; Discharge from plastics factories.	Some people who drink water containing vinyl chloride in excess of the MCL over many years may have an increased risk of getting cancer.
Xylenes (ppm)	10	N/A	10	10	Discharge from petroleum factories; Discharge from chemical factories.	Some people who drink water containing xylenes in excess of the MCL over many years could experience damages to their nervous system.

Key:
AL = Action Level
MCL = Maximum Contaminant Level
MCLG = Maximum Contaminant Level Goal
MFL = million fibers per liter
MRDL = Maximum Residual Disinfectant Level
MRDLG = Maximum Residual Disinfectant Level Goal
mrem/year = millirems per year (a measure of radiation absorbed by the body)
N/A = Not Applicable
NTU = Nephelometric Turbidity Units (a measure of water clarity)
pCi/l = picocuries per liter (a measure of radioactivity)
ppm = parts per million, or milligrams per liter (mg/l)
ppb = parts per billion, or micrograms per liter (g/l)
ppt = parts per trillion, or nanograms per liter
ppq = parts per quadrillion, or picograms per liter
TT = Treatment Technique

Subchapter VI — Conditional Waivers and Variances

NR 809.90 Conditional waivers. (1) GENERAL APPLICATION REQUIREMENTS. A public water system may apply to the department for a conditional waiver for nonmicrobial contaminants respecting compliance with a maximum contaminant level or treatment technique requirement for a period up to 3 years if all of the following apply:

(a) One of the following situations exists:

1. Because of the characteristics of the raw water sources which are reasonably available, the public water system cannot comply with a maximum contaminant level despite application of best technology, treatment techniques or other means generally available, taking costs into consideration.

2. Compelling factors, which may include economic factors, indicate that the public water system cannot comply with a maximum contaminant level or treatment technique requirement for a limited period of time.

(b) The public water system was in operation on the effective date of the maximum contaminant level or treatment technique requirement.

(c) Granting of a conditional waiver will not result in an unreasonable risk to public health.

(d) The public water system shall have entered into a consent order agreement with the department regarding the conditional waiver.

(2) SMALL SYSTEM APPLICATION REQUIREMENTS. Small systems serving less than 3,300 persons, may apply for a conditional waiver for nonmicrobial contaminants only when all of the following conditions are met:

(a) The contaminant or treatment technique to be waived has a maximum contaminant level or treatment technique requirement established in national primary drinking water regulations promulgated on or after January 1, 1986.

(b) The technology used to comply with the maximum contaminant level or treatment technique is approved by the department.

(c) Compliance with maximum contaminant levels or treatment techniques is not reasonably affordable through restructuring or consolidation changes, including

ownership change or physical consolidation or both with another public water system, or obtaining financial assistance through the Wisconsin drinking water state revolving loan fund (DWSRF).

(d) The small system is financially and technically capable of installing, operating and maintaining the applicable small system technology under par. (b).

(e) Granting of a conditional waiver will not result in an unreasonable risk to public health.

(f) The public water system shall have entered into a signed consent order agreement with the department regarding the conditional waiver.

(3) GENERAL WAIVER REQUIREMENTS. The department may grant a conditional waiver if the supplier of water has established that the criteria of sub. (1) or (2) have been met. Any conditional waiver granted shall require all of the following:

(a) Compliance, including increments of progress, by the supplier of water with each maximum contaminant level or treatment technique requirement within the time frame specified by the department in the compliance schedule.

(b) Implementation by the water supplier of control measures the department deems necessary until compliance with the maximum contaminant level or treatment technique requirement is achieved.

(4) BOTTLED WATER USE AS A REQUIREMENT OF A WAIVER. Public water systems that use bottled water as a requirement for receiving a conditional waiver shall meet all of the following requirements:

(a) The department shall require and approve a monitoring program for bottled water. The public water system owner or operator shall develop and put in place a monitoring program that provides reasonable assurances that the bottled water meets all MCLs. The public water system owner or operator shall monitor a representative sample of the bottled water for all contaminants regulated under ss. NR 809.24 (1) and (2) and 809.11 during the first 3-month period that it supplies the bottled water to the public, and annually thereafter. Results of the monitoring program shall be provided to the department annually.

(b) The public water system owner or operator shall receive a certification from the bottled water company that the bottled water supplied meets all requirements of s. 97.34, Stats and s. ATCP 70.26. The public water system owner or operator shall provide the certification to the department the first quarter after it supplies bottled water and annually thereafter.

(c) The public water system shall be fully responsible for the provision of sufficient quantities of bottled water to every person supplied by the public water system via door-to-door bottled water delivery.

(5) POINT OF ENTRY TREATMENT AS A REQUIREMENT OF A WAIVER. If the department approves the use of a point-of-entry device as a requisite for granting a conditional waiver, the water supplier shall provide documentation that the device will not cause increased corrosion of plumbing materials which could increase contaminant levels at the consumer's tap.

(6) ADDITIONAL WAIVER REQUIREMENTS. Additional requirements for conditional waivers shall include all of the following:

(a) Proof of proper and effective installation, operation and maintenance of any applicable treatment technologies.

(b) Department specified monitoring requirements for the contaminant for which the conditional waiver is sought.

(c) Other terms or conditions specified by the department to ensure adequate public health protection, including but not limited to all of the following:

1. Public education requirements.
2. Source water protection requirements.
3. Quarterly conditional waiver compliance reports to the department.

(7) PUBLIC NOTICE OF WAIVERS. Before the department may grant a conditional waiver under this section, a class 1 public notice under ch. 985, Stats., and opportunity for a public hearing on the proposed conditional waiver shall be provided by the department. A hearing held pursuant to a request under this subsection is a class 1 hearing and shall be conducted in accordance with ch. 227, Stats.

(8) EXTENSION OF WAIVERS. The department may extend a compliance deadline not to exceed 3 years, or 2 years for a small system conditional waiver under sub. (2), beyond the expiration date of the original conditional waiver if the supplier of water establishes all of the following:

(a) The public water system cannot meet the maximum contaminant level or treatment technique requirement without capital improvements which cannot be completed within the period of the conditional waiver.

(b) The supplier of water has entered into an enforceable agreement to become part of a regional public water system or, if the supplier of water needs financial assistance for the necessary capital improvements, the supplier of water has entered into an agreement to obtain the financial assistance.

(c) The supplier of water is taking all practicable steps to meet the standard.

(9) RENEWAL OF WAIVER EXTENSIONS. The department may renew an extension granted under sub. (8) if the supplier of water establishes all of the following:

(a) The public water system does not serve more than 500 service connections.

(b) The public water system cannot meet a maximum contaminant level or treatment technique requirement without financial assistance for the necessary capital improvements.

(c) The public water system is taking all practicable steps to achieve compliance with a maximum contaminant level or treatment technique requirement.

NR 809.905 Conditional waivers from the maximum contaminant levels for uranium. (1) GENERAL REQUIREMENTS FOR URANIUM WAIVERS. The department shall consider conditional waivers from the maximum contaminant level for uranium as follows:

(a) The department has identified the following as the best available technology, treatment techniques, or other means available for achieving compliance with the maximum contaminant levels for the radionuclides listed in ss. NR 809.50 (1) and 809.51, for the purposes of issuing a conditional waiver, as shown in s. NR 809.50 (3), Table B.

(b) In addition, the department identifies the following as the best available technology, treatment techniques or other means available for achieving compliance with the maximum contaminant levels for the radionuclides listed in ss. NR 809.50 (1) and 809.51 for the purposes of issuing conditional waivers to small drinking water systems,

defined as those serving 10,000 persons or fewer, as shown in s. NR 809.50 (4), Tables K and L.

(c) The public water system shall have entered into a signed consent order agreement with the department regarding the conditional waiver.

(2) TREATMENT AS A CONDITION OF UNANIUM WAIVERS. The department shall require community water systems to install or use, or both install and use, any treatment technology identified in s. NR 809.50 (3), Table B, or in the case of community water systems that serve 10,000 persons or fewer, s. NR 809.50 (3), Table C and Table E, as a condition for granting a conditional waiver except as provided in sub. (3).

(3) WAIVER FOR ALTERNATIVE TREATMENT IF BATS ARE NOT EFFECTIVE. If a community water system can demonstrate through comprehensive engineering assessments, which may include pilot plant studies, that the treatment technologies identified in this section would only achieve a de minimus reduction in the contaminant level, the department may issue a schedule for compliance that requires the system being granted the conditional waiver to examine other treatment technologies as a condition of obtaining the conditional waiver.

(4) REQUIREMENT TO INSTALL ALTERNATIVE TREATMENT. If the department determines that a treatment technology identified under sub. (3) is technically feasible, the department may require the system to install or use, or both install and use, that treatment technology in connection with a compliance schedule issued under s. NR 809.90. The department's determination shall be based upon studies by the system and other relevant information.

(5) BOTTLED WATER, POINT OF ENTRY, POINT OF USE OR OTHER MEANS AS A CONDITION OF GRANTING A WAIVER. The department may require a community water system to use bottled water, point-of-use devices, point-of-entry devices or other means as a condition of granting a conditional waiver from the requirements of s. NR 809.50 or 809.51 to avoid an unreasonable risk to health.

(6) REQUIREMENTS FOR BOTTLED WATER USE. Community water systems that use bottled water as a condition for receiving a conditional waiver from s. NR 809.50 or 809.51 shall meet the requirements in either s. NR 809.90 (4) (a) or (b) and (c).

(7) CONDITIONS FOR USING POINT OF USE OR POINT OF ENTRY DEVICES. Community water systems that use point-of-use or point-of-entry devices as a condition for obtaining a conditional waiver from the uranium MCL shall meet the conditions in ss. NR 809.50(4)(b) and 809.90 (3).

NR 809.91 Nitrate variances. (1) VARIANCES FOR NON-COMMUNITY WATER SYSTEMS. A non-community water system is eligible for a variance from the nitrate as nitrogen maximum contaminant level if all of the following are met:

(a) The department determines that because of the characteristics of the raw water sources which are reasonably available, the non-community water system cannot comply with the maximum contaminant level for nitrate as nitrogen.

(b) The non-community water system has not had a nitrate as nitrogen sample which exceeds 20 mg/l, confirmed by a check sample.

(c) The supplier of water continuously posts a department approved notice at all water taps supplied with water by the non-community water system. The notice shall state that

the nitrate as nitrogen level exceeds 10 mg/l and describe the potential health effects of exposure.

(d) The supplier of water ensures that water from its system will not be available to children under 6 months of age and provides bottled water which complies with all maximum contaminant levels for such children.

(e) No adverse health effects will result.

(2) VARIANCES FOR COMMUNITY WATER SYSTEMS. A community water system serving a nursing home, prison or mental health care facility, is eligible for a variance from the nitrate as nitrogen maximum contaminant level if all of the following are met:

(a) The institution does not permit infants under 6 months of age as residents.

(b) The community water system has not had a nitrate as nitrogen sample which exceeds 20 mg/l, confirmed by a check sample.

(c) The institution continuously posts a department approved notice at all water taps supplied with water by the community water system. The notice shall state that the nitrate as nitrogen level exceeds 10 mg/l and describe the potential health effects of exposure.

(d) The institution ensures that water from its system will not be available to children under 6 months of age and provides bottled water which complies with all maximum contaminant levels for such children.

(e) No adverse health effects will result.

(3) CONTROL MEASURES FOR VARIANCES. The department may condition the issuance of a variance under this section on compliance with such control measures as it deems necessary. Failure to comply with any term or condition of a variance granted by the department under this section voids the variance.

Subchapter VII — Public Notification of Drinking Water Violations

NR 809.950 General public notification requirements. (1) GENERAL REQUIREMENTS. All public water systems shall comply with the requirements in this subchapter.

(2) WHO SHALL GIVE PUBLIC NOTICE. Each owner or operator of a public water system including, community water systems, non-transient non-community water systems, and transient non-community water systems, shall give notice for all violations of national primary drinking water regulations (NPDWR) and for other situations, as listed in sub. (3). The term "NPDWR violations" is used in this subchapter to include violations of the maximum contaminant level, maximum residual disinfection level, treatment technique, monitoring requirements, and testing procedures in this chapter. Appendix A to this subchapter identifies the tier assignment for each specific violation or situation requiring a public notice.

(3) VIOLATION CATEGORIES AND OTHER SITUATIONS REQUIRING A PUBLIC NOTICE. (a) All of the following NPDWR violations require a public notice:

1. Failure to comply with an applicable maximum contaminant level or maximum residual disinfectant level.

2. Failure to comply with a treatment technique prescribed by this chapter.

3. Failure to perform water quality monitoring, as required by the drinking water regulations.

4. Failure to comply with testing procedures as prescribed in this chapter or by a drinking water regulation.

(b) Conditional waiver to public notice requirements under subch. VI, including all of the following, require a public notice:

1. Operation under a conditional waiver.

2. Failure to comply with the requirements of any schedule that has been set under a conditional waiver.

(c) Special public notices, including all of the following, require a public notice:

1. Occurrence of a waterborne disease outbreak or other waterborne emergency.

2. Exceedance of the nitrate MCL by non-community water systems, if granted permission by the department under s. NR 809.11 (3).

3. Exceedance of the secondary maximum contaminant level for fluoride.

4. Availability of unregulated contaminant monitoring data.

5. Other violations and situations determined by the department to require a public notice under this subchapter, not listed in Appendix A.

(4) TYPE OF PUBLIC NOTICE REQUIRED FOR EACH VIOLATION OR SITUATION. (a) *Public notice tiers.* Public notice requirements are divided into 3 tiers, to take into account the seriousness of the violation or situation and of any potential adverse health effects that may be involved. The public notice requirements for each violation or situation listed in sub. (3) are determined by the tier to which it is assigned. The definition of each tier is provided in sub. (b). Appendix A identifies the tier assignment for each specific violation or situation.

(b) *Definition of public notice tiers.* 1. Tier 1 public notice is required for NPDWR violations and situations with significant potential to have serious adverse effects on human health as a result of short-term exposure.

2. Tier 2 public notice is required for NPDWR violations and situations with potential to have serious adverse effects on human health.

3. Tier 3 public notice is required for NPDWR violations or situations not included in Tier 1 and Tier 2.

(5) WHO SHALL BE NOTIFIED. (a) Each public water system shall provide public notice to persons served by the water system, in accordance with this subchapter. Public water systems that sell or otherwise provide drinking water to consecutive systems are required to give public notice to the owner or operator of the consecutive system. The consecutive system is responsible for providing public notice to the persons it serves.

(b) If a public water system has a violation in a portion of the distribution system that is physically or hydraulically isolated from other parts of the distribution system, the department may allow the system to limit distribution of the public notice to only persons served by that portion of the system which is out of compliance. If the department grants permission for limiting distribution of the notice, permission shall be granted in writing.

(c) A copy of the notice shall also be sent to the department, in accordance with the requirements under s. NR 809.80 (5).

NR 809.951 Tier 1 public notice--form, manner, and frequency of notice. (1) VIOLATIONS OR SITUATIONS WHICH REQUIRE A TIER 1 PUBLIC NOTICE. (a) Appendix A identifies the tier assignment for each specific violation or situation requiring a Tier 1 public notice.

(b) Violation categories and other situations requiring a Tier 1 public notice include all of the following:

1. Violation of the MCL for total coliforms when fecal coliform or E. coli is present in the water distribution system, as specified in s. NR 809.30 (2), or when the water system fails to test for fecal coliforms or E. coli when any repeat sample tests positive for coliform, as specified in s. NR 809.31 (4).

2. Violation of the MCL for nitrate, nitrite, or total nitrate and nitrite, as defined in s. NR 809.11, or when the water system fails to take a confirmation sample within 24 hours of the system's receipt of the first sample showing an exceedance of the nitrate or nitrite MCL, as specified in s. NR 809.12 (6) (b).

3. Exceedance of the nitrate MCL by non-community water systems, where permitted to exceed the MCL by the department under s. NR 809.11 (3), as required under s. NR 809.958.

4. Violation of the MRDL for chlorine dioxide, as defined in s. NR 809.561 (2), when one or more samples taken in the distribution system the day following an exceedance of the MRDL at the entrance of the distribution system exceed the MRDL, or when the water system does not take the required samples in the distribution system, as specified in s. NR 809.566 (3) (b) 1.

5. Violation of the turbidity treatment technique MCL under s. NR 810.29(6), where the department determines after consultation that a Tier 1 notice is required or where consultation does not take place within 24 hours after the system learns of the violation.

6. Violation of the surface water treatment rule (SWTR) or interim enhanced surface water treatment rule (IESWTR) treatment technique requirement resulting from a single exceedance of the maximum allowable turbidity limit as identified in Appendix A, if the department determines after consultation that a Tier 1 notice is required or if consultation does not take place within 24 hours after the system learns of the violation.

7. Occurrence of a waterborne disease outbreak, as defined in s. NR 809.04(86), or other waterborne emergency, such as a failure or significant interruption in key water treatment processes, a natural disaster that disrupts the water supply or distribution system, or a chemical spill or unexpected loading of possible pathogens into the source water that significantly increases the potential for drinking water contamination.

8. Other violations or situations with significant potential to have serious adverse effects on human health as a result of short-term exposure, as determined by the department either in its regulations or on a case-by-case basis.

9. Detection of *E. coli* , enterococci, or coliphage in source water samples as specified under s. NR 809.325(2).

(2) TIMING OF A TIER 1 PUBLIC NOTICE AND ADDITIONAL STEPS. Public water systems shall do all of the following if Tier 1 public notice is required:

(a) Provide a public notice as soon as practical but no later than 24 hours after the system learns of the violation.

(b) Initiate consultation with the department as soon as practical, but no later than 24 hours after the public water system learns of the violation or situation, to determine additional public notice requirements.

(c) Comply with any additional public notification requirements, including any repeat notices or direction on the duration of the posted notices, that are established as a result of the consultation with the department. Requirements may include the timing, form, manner, frequency, and content of repeat notices, if any, and other actions designed to reach all persons served.

(3) FORM AND MANNER OF THE PUBLIC NOTICE. Public water systems shall provide the Tier 1 public notice within 24 hours in a form and manner reasonably calculated to reach all persons served. The form and manner used by the public water system shall be designed to fit the specific situation, and to reach residential, transient and non-transient users of the water system. To reach all persons served, water systems shall use, at a minimum, one or more of the following forms of delivery:

(a) Appropriate broadcast media, such as radio and television.

(b) Posting of the notice in conspicuous locations throughout the area served by the water system.

(c) Hand delivery of the notice to persons served by the water system.

(d) Another delivery method approved in writing by the department.

NR 809.952 Tier 2 public notice--form, manner, and frequency of notice. (1) VIOLATIONS OR SITUATIONS WHICH REQUIRE A TIER 2 PUBLIC NOTICE. (a) Appendix A identifies the tier assignment for each specific violation or situation requiring a Tier 2 public notice.

(b) Violation categories and other situations requiring a Tier 2 public notice include all of the following:

1. All violations of the MCL, MRDL, and treatment technique requirements, except if a Tier 1 notice is required under s. NR 809.951 (1) or if the department determines that a Tier 1 notice is required.

2. Violations of the monitoring and testing procedure requirements, if the department determines that a Tier 2 rather than a Tier 3 public notice is required, taking into account potential health impacts and persistence of the violation.

3. Failure to comply with the terms and conditions of any variance or exemption in place.

(2) TIMING OF A TIER 2 PUBLIC NOTICE. (a) Public water systems shall provide the Tier 2 public notice as soon as practical, but no later than 30 days after the system learns of the violation. If the public notice is posted, the notice shall remain in place for as long as the violation or situation persists, but in no case for less than 7 days, even if the violation or situation is resolved. The department may, in appropriate circumstances, allow additional time for the initial notice of up to 3 months from the date the system learns of the violation. The department may not grant an extension to the 30-day deadline for any unresolved violation nor allow across-the-board extensions by rule or policy for other violations or situations requiring a Tier 2 public notice. Extensions granted by the department shall be in writing.

(b) The public water system shall repeat the notice every 3 months as long as the violation or situation persists, unless the department determines that appropriate circumstances warrant a different notice frequency. In no circumstance may the repeat notice be given less frequently than once per year. The department may not allow across-the-board reductions in the repeat notice frequency for other ongoing violations requiring a Tier 2 repeat notice. Department determinations allowing repeat notices to be given less frequently than once every 3 months shall be in writing.

(c) For turbidity violations specified in this paragraph, public water systems shall consult with the department as soon as practical but no later than 24 hours after the public water system learns of the violation, to determine whether a Tier 1 public notice under s.

NR 809.951 (1) is required to protect public health. When consultation does not take place within the 24-hour period, the water system shall distribute a Tier 1 notice of the violation, no later than 48 hours after the system learns of the violation, following the requirements under s. NR 809.951 (2) and (3). Consultation with the department is required for any of the following:

1. Violation of the turbidity treatment technique MCL under s. NR 810.29(6).

2. Violation of the surface water treatment rule or interim enhanced surface water treatment rule treatment technique requirement resulting from a single exceedance of the maximum allowable turbidity limit.

(3) FORM AND MANNER OF THE TIER 2 PUBLIC NOTICE. Public water systems shall provide the initial Tier 2 public notice and any repeat notices in a form and manner that is reasonably calculated to reach persons served in the required time period. The form and manner of the public notice may vary based on the specific situation and type of water system, but it shall at a minimum meet all of the following requirements:

(a) *Community water systems.* Unless directed otherwise by the department in writing, community water systems shall provide notice by both of the following:

1. Mail or other direct delivery to each customer receiving a bill and to other service connections to which water is delivered by the public water system.

2. Any other method reasonably calculated to reach other persons regularly served by the system, if they would not normally be reached by the notice required in subd. 1. Persons may include those who do not pay water bills or do not have service connection addresses, such as house renters, apartment dwellers, university students, nursing home patients and prison inmates. Other methods may include publication in a local newspaper; delivery of multiple copies for distribution by customers that provide their drinking water to others, such as apartment building owners or large private employers; posting in public places served by the system or on the internet; or delivery to community organizations.

(b) *Non-community water systems.* Unless directed otherwise by the department in writing, non-community water systems shall provide notice by all of the following:

1. Posting the notice in conspicuous locations throughout the distribution system frequented by persons served by the system, or by mail or direct delivery to each customer and service connection, if known.

2. Any other method reasonably calculated to reach other persons served by the system if they would not normally be reached by the notice required in subd. 1. Other methods may include publication in a local newspaper or newsletter distributed to customers; use of E-mail to notify employees or students; or, delivery of multiple copies in central locations, such as community centers.

NR 809.953 Tier 3 public notice--form, manner, and frequency of notice. (1) VIOLATIONS OR SITUATIONS WHICH REQUIRE A TIER 3 PUBLIC NOTICE. (a) Appendix A identifies the tier assignment for each specific violation or situation requiring a Tier 3 public notice.

(b) Violation categories and other situations requiring a Tier 3 public notice include all of the following:

1. Monitoring violations under ch. NR 809, except if a Tier 1 notice is required under s. NR 809.951 (1) or if the department determines that a Tier 2 notice is required.

2. Failure to comply with a testing procedure established in ch. NR 809, except if a Tier 1 notice is required under s. NR 809.951 (1) or if the department determines that a Tier 2 notice is required.

3. Operation under a conditional waiver or variance, or both, under subch. VIII.

4. Availability of unregulated contaminant monitoring results, as required under s. NR 809.956.

5. Exceedance of the fluoride secondary maximum contaminant level, as required under s. NR 809.957.

(2) TIMING OF A TIER 3 PUBLIC NOTICE. (a) Public water systems shall provide Tier 3 public notice not later than one year after the public water system learns of the violation or situation or begins operating under a variance or exemption. Following the initial notice, the public water system shall repeat the Tier 3 public notice annually for as long as the violation, variance, exemption or other situation persists. If the public notice is posted, the notice shall remain in place for as long as the violation, variance, exemption or other situation persists, but in no case less than 7 days, even if the violation or situation is resolved.

(b) Instead of individual Tier 3 public notices, a public water system may use an annual report detailing all violations and situations that occurred during the previous 12 months, as long as the timing requirements of par. (a) are met.

(3) FORM AND MANNER OF THE TIER 3 PUBLIC NOTICE. Public water systems shall provide the initial Tier 3 public notice and any repeat notices in a form and manner that is reasonably calculated to reach persons served in the required time period. The form and manner of the public notice may vary based on the specific situation and type of water system, but it shall at a minimum meet all of the following requirements:

(a) *Community water systems.* Unless directed otherwise by the department in writing, community water systems shall provide notice by both of the following:

1. Mail or other direct delivery to each customer receiving a bill and to other service connections to which water is delivered by the public water system.

2. Any other method reasonably calculated to reach other persons regularly served by the system, if they would not normally be reached by the notice required in subd. 1. Persons may include those who do not pay water bills or do not have service connection addresses, e.g., house renters, apartment dwellers, university students, nursing home patients, prison inmates, etc. Other methods may include publication in a local newspaper; delivery of multiple copies for distribution by customers that provide their drinking water to others, such as apartment building owners or large private employers; posting in public places or on the internet; or delivery to community organizations.

(b) *Non-community water systems.* Unless directed otherwise by the department in writing, non-community water systems shall provide notice by all of the following:

1. Posting the notice in conspicuous locations throughout the distribution system frequented by persons served by the system, or by mail or direct delivery to each customer and service connection, if known.

2. Any other method reasonably calculated to reach other persons served by the system, if they would not normally be reached by the notice required in subd. 1. Other methods may include publication in a local newspaper or newsletter distributed to customers; use of E-mail to notify employees or students; or delivery of multiple copies in central locations, such as community centers.

(4) USE OF CONSUMER CONFIDENCE REPORTS. For community water systems, the consumer confidence report required under this subchapter may be used as a vehicle for the initial Tier 3 public notice and all required repeat notices, as long as all of the following occur:

(a) The consumer confidence report is provided to persons served no later than 12 months after the system learns of the violation or situation as required under sub. (2).

(b) The Tier 3 notice contained in the consumer confidence report follows the content requirements under s. NR 809.954.

(c) The consumer confidence report is distributed according to the delivery requirements under sub. (3).

NR 809.954 Public notice content. (1) PUBLIC NOTICE ELEMENTS FOR VIOLATIONS OF NATIONAL PRIMARY DRINKING WATER REGULATIONS (NPDWR) OR OTHER SITUATIONS REQUIRING A PUBLIC NOTICE. When a public water system violates a national primary drinking water regulation or has a situation requiring public notification, each public notice shall include all of the following elements:

(a) A description of the violation or situation, including the contaminants of concern, and, as applicable, the contaminant levels.

(b) When the violation or situation occurred.

(c) Any potential adverse health effects from the violation or situation, including the standard language under sub. (4) (a) or (b), whichever is applicable.

(d) The population at risk, including subpopulations particularly vulnerable if exposed to the contaminant in their drinking water.

(e) Whether alternative water supplies should be used.

(f) What actions consumers should take, including when they should seek medical help, if known.

(g) What the system is doing to correct the violation or situation.

(h) When the water system expects to return to compliance or resolve the situation.

(i) The name, business address and phone number of the water system owner, operator or designee of the public water system as a source of additional information concerning the notice.

(j) A statement to encourage the notice recipient to distribute the public notice to other persons served, using the standard language under sub. (4) (c), if applicable.

(2) PUBLIC NOTICE ELEMENTS FOR PUBLIC WATER SYSTEMS OPERATING UNDER A VARIANCE OR EXEMPTION. (a) If a public water system has been granted a variance or an exemption, the public notice shall contain all of the following:

1. An explanation of the reasons for the variance or exemption.

2. The date on which the variance or exemption was issued.

3. A brief status report on the steps the system is taking to install treatment, find alternative sources of water, or otherwise comply with the terms and schedules of the variance or exemption.

4. A notice of any opportunity for public input in the review of the variance or exemption.

(b) If a public water system violates the conditions of a variance or exemption, the public notice shall contain all of the elements in sub. (1).

(3) PUBLIC NOTICE PRESENTATION. (a) Each public notice required by this subchapter shall meet all of the following requirements:

1. Shall be displayed in a conspicuous way when printed or posted.
2. May not contain overly technical language or very small print.
3. May not be formatted in a way that defeats the purpose of the notice.
4. May not contain language which nullifies the purpose of the notice.

(b) Each public notice required by this subchapter shall comply with multilingual requirements, as follows:

1. For public water systems where 5% or more of the population served consists of non-English speaking consumers, the public notice shall contain information in the appropriate languages regarding the importance of the notice or contain a telephone number or address where persons served may contact the water system to obtain a translated copy of the notice or to request assistance in the appropriate languages.

2. In cases where the public water system is unable to accurately determine whether non-English speaking consumers constitute 5% of the population served, the department may require that the public notice shall include the same information as in subd. 1., to reach non-English speaking persons served by the water system.

(4) PUBLIC NOTICE STANDARD LANGUAGE. Public water systems shall include the following standard language in their public notice:

(a) *Standard health effects language for MCL or MRDL violations, treatment technique violations, and violations of the condition of a variance or exemption.* Public water systems shall include in each public notice the health effects language specified in Appendix B corresponding to each MCL, MRDL and treatment technique violation listed in Appendix A, and for each violation of a condition of a variance or exemption.

(b) *Standard language for monitoring and testing procedure violations.* Public water systems shall include the following language in their notice, including the language necessary to fill in the blanks, for all monitoring and testing procedure violations listed in Appendix A: We are required to monitor your drinking water for specific contaminants on a regular basis. Results of regular monitoring are an indicator of whether or not your drinking water meets health standards. During [compliance period], we "did not monitor or test" or "did not complete all monitoring or testing" for [contaminant(s)], and therefore cannot be sure of the quality of your drinking water during that time.

(c) *Standard language to encourage the distribution of the public notice to all persons served.* Public water systems shall include in their notice the following language, if applicable: Please share this information with all the other people who drink this water, especially those who may not have received this notice directly, for example, people in apartments, nursing homes, schools, and businesses. You can do this by posting this notice in a public place or distributing copies by hand or mail.

NR 809.955 Notice to new billing units or new customers. (1) COMMUNITY WATER SYSTEMS. Community water systems shall give a copy of the most recent public notice for any continuing violation, the existence of a variance or exemption, or other ongoing situations requiring a public notice to all new billing units or new customers prior to or at the time service begins.

(2) NON-COMMUNITY WATER SYSTEMS. Non-community water systems shall continuously post the public notice in conspicuous locations in order to inform new

consumers of any continuing violation, variance or exemption, or other situation requiring a public notice for as long as the violation, variance, exemption, or other situation persists.

NR 809.956 Special notice of the availability of unregulated contaminant monitoring results. (1) TIMING OF THE SPECIAL NOTICE. The owner or operator of a community water system or non-transient non-community water system required to monitor under Subpart E §141.401 of the Federal Regulations and s. NR 809.25 shall notify persons served by the system of the availability of the results of such sampling no later than 12 months after the monitoring results are known.

(2) FORM AND MANNER OF THE SPECIAL NOTICE. The form and manner of the public notice shall follow the requirements for a Tier 3 public notice prescribed in s. NR 809.953 (3) and (4) (a) and (c). The notice shall also identify a person and provide the telephone number to contact for information on the monitoring results.

NR 809.957 Special notice for exceedance of the secondary maximum contaminant level for fluoride. (1) TIMING OF THE SPECIAL NOTICE. Community water systems that exceed the fluoride secondary maximum contaminant level of 2 mg/l as specified in s. NR 809.70, determined by the last single sample taken in accordance with s. NR 809.12, but that do not exceed the maximum contaminant level (MCL) of 4 mg/l for fluoride, as specified in s. NR 809.11, shall provide the public notice in sub. (3) to persons served. Public notice shall be provided as soon as practical but no later than 12 months from the day the water system learns of the exceedance. A copy of the notice shall also be sent to all new billing units and new customers at the time service begins and to the state public health officer at the department of health services. The public water system shall repeat the notice at least annually for as long as the secondary maximum contaminant level is exceeded. If the public notice is posted, the notice shall remain in place for as long as the secondary maximum contaminant level is exceeded, but in no case less than 7 days, even if the exceedance is eliminated. On a case-by-case basis, the department may require an initial notice sooner than 12 months and repeat notices more frequently than annually.

(2) FORM AND MANNER OF THE SPECIAL NOTICE. The form and manner of the public notice, including repeat notices, shall follow the requirements for a Tier 3 public notice in s. NR 809.953 (3) and (4) (a) and (c).

(3) SPECIAL NOTICE STANDARD LANGUAGE. The notice shall contain the following language, including the language necessary to fill in the blanks: This is an alert about your drinking water and a cosmetic dental problem that might affect children under 9 years of age. At low levels, fluoride can help prevent cavities, but children drinking water containing more than 2 milligrams per liter (mg/l) of fluoride may develop cosmetic discoloration of their permanent teeth known as dental fluorosis. The drinking water provided by your community water system [name] has a fluoride concentration of [insert value] mg/l. Dental fluorosis, in its moderate or severe forms, may result in a brown staining and/or pitting of the permanent teeth. This problem occurs only in developing teeth, before they erupt from the gums. Children under 9 should be provided with alternative sources of drinking water or water that has been treated to remove the fluoride to avoid the possibility of staining and pitting of their permanent teeth. You may also want to contact your dentist about proper use by young children of fluoride-containing

products. Older children and adults may safely drink the water. Drinking water containing more than 4 mg/L of fluoride, the U.S. Environmental Protection Agency's drinking water standard, can increase your risk of developing bone disease. Your drinking water does not contain more than 4 mg/l of fluoride, but we are required to notify you when we discover that the fluoride levels in your drinking water exceed 2 mg/l because of this cosmetic dental problem. For more information, please call [name of water system contact] of [name of community water system] at [phone number]. Some home water treatment units are also available to remove fluoride from drinking water. To learn more about available home water treatment units, you may call NSF International at 1-877-8-NSF-HELP.

History: CR 00-162: cr. Register November 2002 No. 563, eff. 12-1-02.

NR 809.958 Special notice for nitrate exceedances above MCL by non-community water systems, where granted permission by the department under s. NR 809.11 (3). (1) TIMING OF THE SPECIAL NOTICE. The owner or operator of a non-community water system granted permission by the department under s. NR 809.11 (3) to exceed the nitrate MCL shall provide notice to persons served according to the requirements for a Tier 1 public notice under s. NR 809.951 (1) and (2).

(2) FORM AND MANNER OF THE SPECIAL NOTICE. Non-community water systems granted permission by the department to exceed the nitrate MCL under s. NR 809.11 (3) shall provide continuous posting of the fact that nitrate levels exceed 10 mg/l and the potential health effects of exposure, according to the requirements for Tier 1 public notice delivery under s. NR 809.951 (3) and the content requirements under s. NR 809.954.

NR 809.959 Public notice by the department on behalf of the public water system. (1) DEPARTMENT RESPONSIBILITIES. The department may give the notice required by this subchapter on behalf of the owner and operator of the public water system if the department complies with the requirements of this subchapter.

(2) PUBLIC WATER SYSTEM RESPONSIBILITIES WHEN PUBLIC NOTICE IS PROVIDED BY THE DEPARTMENT. The owner or operator of the public water system remains responsible for ensuring that the requirements of this subchapter are met.

NR 809.960 Special notice for significant deficiencies or source groundwater fecal contamination. (1) TIMING AND MANNER OF SPECIAL PUBLIC NOTICE. Timing and manner of the special notice shall be done as follows:

(a) *Community water systems.* In addition to public notification requirements under this subchapter, a community groundwater system that receives notice from the department of a significant deficiency or notification of a fecal indicator-positive groundwater source sample that is not invalidated by the department shall inform the public served by the water system of the of any uncorrected significant deficiency or fecal indicator-positive source sample. Community water systems shall provide the special public notice in the Consumer Confidence Report (CCR) required under ss. NR 809.833(7)(f) as soon as practical after the system learns of the violation. The system shall continue to inform the public annually in their the CCR, from the date of notification from the department, until the significant deficiency is corrected or the fecal contamination in the groundwater source is determined by the department to be corrected.

(b) *Non-community systems.* In addition to public notification requirements under this subchapter, a non-community groundwater system that receives notice from the department of a significant deficiency shall inform the public served by the water system in a manner approved by the department of any significant deficiency that has not been corrected within 12 months of being notified by the department, or earlier if directed by the department. The system must continue to inform the public annually until the significant deficiency is corrected.

(2) CONTENT OF THE SPECIAL NOTICE. The information contained in the special notice shall include the following:

(a) The nature of the significant deficiency and the date the significant deficiency was identified by the department.

(b) The department-approved plan and schedule for correction of the significant deficiency, including interim measures, progress to date, and any interim measures completed.

(c) For systems with a large proportion of non-English speaking consumers, as determined by the department, information in the appropriate language or languages regarding the importance of the notice or a telephone number or address consumers may use to contact the system to obtain a translated copy of the notice or assistance in the appropriate language.

(3) NOTICE OF RETURN TO COMPLIANCE. If directed by the department, a non-community water system with significant deficiencies that have been corrected must inform its customers of the significant deficiencies, how the deficiencies were corrected, and the dates of correction.

NR 809.970 Special notice for repeated failure to conduct monitoring of the source water for Cryptosporidium and for failure to determine bin classification or mean Cryptosporidium level. (1) TIMING FOR SPECIAL NOTICE FOR REPEATED FAILURE TO MONITOR. The owner or operator of a community or non-community water system that is required to monitor source water under s. NR 809.331(1) (a) and (b) must notify persons served by the water system that monitoring has not been completed as specified no later than 30 days after the system has failed to collect any 3 months of monitoring as specified in s. NR 809.331(3). The notice must be repeated as specified in s. NR 809.952(2).

(2) TIMING FOR SPECIAL NOTICE FOR FAILURE TO DETERMINE BIN CLASSIFICATION OR MEAN CRYPTOSPORIDIUM LEVEL. The owner or operator of a community or non-community water system that is required to determine a bin classification under s. NR 810.34, or to determine mean Cryptosporidium level under s. NR 810.36, must notify persons served by the water system that the determination has not been made as required no later than 30 days after the system has failed report the determination as specified in ss. NR 810.34(5)(a) or 810.36(1), respectively. The notice must be repeated as specified in s. NR 809.952(2). The notice is not required if the system is complying with a department approved schedule to address the violation.

(3) THE FORM AND MANNER OF THE SPECIAL NOTICE. The form and manner of the public notice must follow the requirements for a Tier 2 public notice prescribed in s. NR 809.952(3). The public notice must be presented as required in s. NR 809.954(3).

(4) MANDATORY LANGUAGE THAT MUST BE CONTAINED IN THE SPECIAL NOTICE. The notice must contain the following language, including the language necessary to fill in the blanks.

(a) The special notice for repeated failure to conduct monitoring must contain all of the following language: We are required to monitor the source of your drinking water for Cryptosporidium. Results of the monitoring are to be used to determine whether water treatment at the (treatment plant name) is sufficient to adequately remove *Cryptosporidium* from your drinking water. We are required to complete this monitoring and make this determination by (required bin determination date). We "did not monitor or test" or "did not complete all monitoring or testing" on schedule and, therefore, we may not be able to determine by the required date what treatment modifications, if any, must be made to ensure adequate *Cryptosporidium* removal. Missing this deadline may, in turn, jeopardize our ability to have the required treatment modifications, if any, completed by the deadline required, (date). For more information, please call (name of water system contact) of (name of water system) at (phone number).

(b) The special notice for failure to determine bin classification or mean *Cryptosporidium* level must contain all of the following language: We are required to monitor the source of your drinking water for *Cryptosporidium* in order to determine by (date) whether water treatment at the (treatment plant name) is sufficient to adequately remove *Cryptosporidium* from your drinking water. We have not made this determination by the required date. Our failure to do this may jeopardize our ability to have the required treatment modifications, if any, completed by the required deadline of (date). For more information, please call (name of water system contact) of (name of water system) at (phone number).

(c) Each special notice must also include a description of what the system is doing to correct the violation and when the system expects to return to compliance or resolve the situation.

Appendix A to Subchapter VII
NPDWR Violations and Other Situations Requiring Public Notice[1]

Contaminant	MCL/MRDL/TT violations[2]		Monitoring & testing procedure violations	
	Tier of public notice required	**Citation**	**Tier of public notice required**	**Citation**
I. Violations of National Primary Drinking Water Regulations:[3]				
A. Microbiological Contaminants				
1. Total coliform	2	809.30(1)	3	809.31(1)-(4)
2. Fecal coliform/E. coli	1	809.30(2)	[4]1, 3	809.31(4)
3. Turbity MCL	2	810.29 (1)	3	810.38(1)b) 810.38(2)(a), 810.38(2)(b), 810.29
4. Turbidity MCL (average 2 days' samples >5 NTU)	[5]2, 1	810.29(2)	3	810.38(1)b) 810.38(2)(a), 810.38(2)(b), 810.29
5 Turbidity (for TT violations resulting from a single exceedance of maximum allowable turbidity level)	[6]2, 1	810.29 (1), 810.29(2), 810.29(3), 810.29(4), 810.29(6) 810.30(1), 810.30(4)(a), 810.30(4)(b)	3	810.38(1)b) 810.38(2)(a), 810.38(2)(b), 810.29
6. Surface Water Treatment Rule violations, other than violations resulting from single exceedance of max. allowable turbidity level (TT)	2	810.27 – 810.33	3	810.38
7. Interim Enhanced Surface Water Treatment Rule violations, other than violations resulting from single exceedance of max. turbidity level (TT)	2	NR 810 subch. 2	3	810.29, 810.38
8. Filter Backwash Rule (FBWR)	2	NR 809.333(3) NR 811.60 NR 811.62	3	NR 810.29
9. Long Term 2 Enhanced Surface Water Treatment Rule violations	2	NR 810.34- NR 810.45	[16]2,3	NR 809.331- NR 809.335 NR 810.32(1) and (2)
10. Groundwater Rule	2	NR 809.329	3	NR809.325(5)NR 809.327(6)
B. Inorganic Chemicals (IOCs)				

1. Antimony	2	809.11(2)	3	809.115(1) to (3) and (6)(a)and (c)
2. Arsenic	2	809.11(2)	3	809.115(1) to (3) and (6)(a)and (c)
3. Asbestos (fibers >10 ìm)	2	809.11(2)	3	809.115(1) to (3) and (6)(a)and (c)
4. Barium	2	809.11(2)	3	809.115(1) to (3) and (6)(a)and (c)
5. Beryllium	2	809.11(2)	3	809.115(1) to (3) and (6)(a)and (c)
6. Cadmium	2	809.11(2)	3	809.115(1) to (3) and (6)(a)and (c)
7. Chromium (total)	2	809.11(2)	3	809.115(1) to (3) and (6)(a)and (c)
8. Cyanide	2	809.11(2)	3	809.115(1) to (3) and (6)(a)and (c)
9. Fluoride	2	809.11(2)	3	809.115(1) to (3) and (6)(a)and (c)
10. Mercury (inorganic)	2	809.11(2)	3	809.115(1) to (3) and (6)(a)and (c)
11. Nitrate	1	809.11(2)	[8]1, 3	809.115(4),(5) and (6)(b)
12. Nitrite	1	809.11(2)	[8]1, 3	809.115(4),(5) and (6)(b)
13. Total Nitrate and Nitrite	1	809.11(2)	3	809.115(4) and (5)
14. Selenium	2	809.11(2)	3	809.115(1) to (3) and (6)(a)and (c)
15. Thallium	2	809.11(2)	3	809.115(1) to (3) and (6)(a)and (c)

Appendix A to Subchapter VII - Continued
NPDWR Violations and Other Situations Requiring Public Notice[1]

Contaminant	**MCL/MRDL/TT violations[2]**		**Monitoring & testing procedure violations**	
C. Lead and Copper Rule (Action Level for lead is 0.015 mg/L, copper is 1.3 mg/L) 1. Lead and Copper Rule (TT)	**Tier of public notice required**	**Citation**	**Tier of public notice required**	**Citation**
D. Synthetic Organic Chemicals (SOCs)	2	809.541 – 809.55	3	809.541-809.55
1. 2,4-D	2	809.20(1)	3	809.205
2. 2,4,5-TP (Silvex)	2	809.20(1)	3	809.205
3. Alachlor	2	809.20(1)	3	809.205
4. Atrazine	2	809.20(1)	3	809.205

5. Benzo(a)pyrene (PAHs)	2	809.20(1)	3	809.205
6. Carbofuran	2	809.20(1)	3	809.205
7. Chlordane	2	809.20(1)	3	809.205
8. Dalapon	2	809.20(1)	3	809.205
9. Di (2-ethylhexyl) adipate	2	809.20(1)	3	809.205
10. Di (2-ethylhexyl) phthalate	2	809.20(1)	3	809.205
11. Dibromochloropropane	2	809.20(1)	3	809.205
12. Dinoseb	2	809.20(1)	3	809.205
13. Dioxin (2, 3, 7, 8-TCDD)	2	809.20(1)	3	809.205
14. Diquat	2	809.20(1)	3	809.205
15. Endothall	2	809.20(1)	3	809.205
16. Endrin	2	809.20(1)	3	809.205
17. Ethylene dibromide	2	809.20(1)	3	809.205
18. Glyphosate	2	809.20(1)	3	809.205
19. Heptachlor	2	809.20(1)	3	809.205
20. Heptachlor epoxide	2	809.20(1)	3	809.205
21. Hexachlorobenzene	2	809.20(1)	3	809.205
22. Hexachlorocyclo-pentadiene	2	809.20(1)	3	809.205
23. Lindane	2	809.20(1)	3	809.205
24. Methoxychlor	2	809.20(1)	3	809.205
25. Oxamyl (Vydate)	2	809.20(1)	3	809.205
26. Pentachlorophenol	2	809.20(1)	3	809.205
27. Picloram	2	809.20(1)	3	809.205
28. Polychlorinated biphenyls	2	809.20(1)	3	809.205
29. Simazine	2	809.20(1)	3	809.205
30. Toxaphene	2	809.20(1)	3	809.205
E. Volatile Organic Chemicals (VOCs)	2	809.24(1)	3	809.245
1. Benzene	2	809.24(1)	3	809.245
2. Carbon tetrachloride	2	809.24(1)	3	809.245
3. Chlorobenzene (monochlorobenzene)	2	809.24(1)	3	809.245
4. o-Dichlorobenzene	2	809.24(1)	3	809.245
5. p-Dichlorobenzene	2	809.24(1)	3	809.245
6. 1,2-Dichloroethane	2	809.24(1)	3	809.245
7. 1,1-Dichloroethylene	2	809.24(1)	3	809.245
8. cis-1,2-Dichloroethylene	2	809.24(1)	3	809.245
9. trans-1,2-Dichloroethylene	2	809.24(1)	3	809.245
10. Dichloromethan	2	809.24(1)	3	809.245
11. 1,2-Dichloropropane	2	809.24(1)	3	809.245
12. Ethylbenzene	2	809.24(1)	3	809.245
13. Styrene	2	809.24(1)	3	809.245
14. Tetrachloroethylene	2	809.24(1)	3	809.245
15. Toluene	2	809.24(1)	3	809.245
16. 1,2,4-Trichlorobenzene	2	809.24(1)	3	809.245
17. 1,1,1-Trichloroethane	2	809.24(1)	3	809.245
18. 1,1,2-Trichloroethane	2	809.24(1)	3	809.245
19. Trichloroethylene	2	809.24(1)	3	809.245

20. Vinyl chloride	2	809.24(1)	3	809.245
21. Xylenes (total)	2	809.24(1)	3	809.245
F. Radioactive Contaminants				
1. Beta/photon emitters	2	809.51	3	809.52(1), 809.53(2)
2. Alpha emitters	2	809.50(2)	3	809.52(1), 809.53(1)
3. Combined radium (226 & 228)	2	809.50(1)	3	809.52(1), 809.53(1)
G. Disinfection Byproducts (DBPs), Byproduct Precursors, Disinfectant Residuals. Where disinfection is used in the treatment of drinking water, disinfectants combine with organic and inorganic matter present in water to form chemicals called disinfection byproducts. EPA sets standards for controlling the levels of disinfectants and disinfection byproducts in drinking water, including trihalomethanes and haloacetic acids. [9]				
1. Total trihalomethanes	2	809.561(1)	3	809.565(1)-(4)
2. Haloacetic Acids	2	809.561(1)	3	809.565(1)-(4)
3. Bromate	2	809.561(2)	3	809.565(1), (5)
4. Chlorite	2	809.561(2)	3	809.565(1), (5)
5. Chlorine (MRDL)	2	809.561(2), 809.566(d)	2, 3	809.565(1), (5), 809.566(3)(b)
6. Chloramine (MRDL)	1[10]	809.561(2), 809.566(d)	1	809.565(1), (5), 809.566(3)(b)
7. Chlorine dioxide (MRDL), where any 2 consecutive daily samples at entrance to distribution system only are above MRDL	2[11]	809.569(1)-(2)	3	809.565(1), (6)
8. Chlorine dioxide (MRDL), where samples in distribution system the next day are also above MRDL	2[11]	809.569(1)-(2)	3	809.565(1), (6)
9. Control of disinfection byproducts precursors – TOC (TT)				
10. Bench marking and disinfection profiling	N/A	N/A	3	810.32
11. Development of monitoring plan	N/A	N/A	3	809.565(8)
H. Other Treatment Techniques				
1. Acrylamide (TT)	2	809.25(5)	N/A	N/A
2. Epichlorohydrin (TT)	2	809.25(5)	N/A	N/A
II. Unregulated Contaminant Monitoring:[12]				
A. Unregulated contaminants	N/A	N/A	3	809.78

B. Nickel	N/A	N/A	3	809.12(4)(c), 809.12(4) Table A
III. Public Notification for Conditional Waivers and Variances				
A. Operation under a conditional waiver or variance	3	809.90, 809.91	N/A	N/A
B. Violation of a conditional waiver or variance	2	Subchapter VII	N/A	N/A
IV. Other Situations Requiring Public Notification:				
A. Fluoride secondary maximum contaminant level exceedance	3	809.70	N/A	N/A
B. Exceedance of nitrate MCL for non-community systems, as allowed by the department	1	809.11(3)	N/A	N/A
C. Availability of unregulated contaminant monitoring data	3	809.26	N/A	N/A
D. Waterborne disease outbreak	1	809.04(85), 809.755(3)(b)2.	N/A	N/A
E. Other waterborne emergency[13]	1	N/A	N/A	N/A
F. Other situations as determined by the department	[14]1, 2, 3	N/A	N/A	N/A
G. Source Water Sample Positive for GWR Fecal indicators: E. coli, enterococci, or coliphage	1	809.325(2) and (3)	N/A	N/A

Appendix A Footnotes

[1] Violations and other situations not listed in this table, e.g., reporting violations and failure to prepare Consumer Confidence Reports, do not require notice, unless otherwise determined by the department. Departments may, at their option, also require a more stringent public notice tier, e.g., Tier 1 instead of Tier 2 or Tier 2 instead of Tier 3, for specific violations and situations listed in this Appendix, as authorized under s. NR 809.951(1) and (2).

[2] MCL--Maximum contaminant level, MRDL—Maximum residual disinfectant level, TT—Treatment technique.

[3] The term Violations of National Primary Drinking Water Regulations is used here to include violations of MCL, MRDL, TT, monitoring and testing procedure requirements.

[4] Failure to test for fecal coliform or E. coli is a Tier 1 violation if testing is not done after any repeat sample tests positive for coliform. All other total coliform monitoring and testing procedure violations are Tier 3.

[5] Systems that violate the turbidity MCL of 5 NTU based on an average of measurements over 2 consecutive days shall consult with the department within 24 hours after learning of the violation. Based on this consultation, the department may subsequently decide to elevate the violation to Tier 1. If a system is unable to make

contact with the department in the 24-hour period, the violation is automatically elevated to Tier 1.

[6] Systems with a treatment technique violation involving a single exceedance of a maximum turbidity limit under the Surface Water Treatment Rule or the Interim Enhanced Surface Water Treatment Rule are required to consult with the department within 24 hours after learning of the violation. Based on this consultation, the department may subsequently decide to elevate the violation to Tier 1. If a system is unable to make contact with the department in the 24-hour period, the violation is automatically elevated to Tier 1.

[7] Most of the requirements of the Interim Enhanced Surface Water Treatment Rule (63 FR 69477) become effective January 1, 2002 for systems using surface water or groundwater under the direct influence of surface water serving at least 10,000 persons. However, s. NR 809.77 has some requirements that become effective as early as April 16, 1999. The Surface Water Treatment Rule remains in effect for systems serving at least 10,000 persons even after 2002; the Interim Enhanced Surface Water Treatment Rule adds additional requirements and does not in many cases supersede the Surface Water Treatment Rule.

[8] Failure to take a confirmation sample within 24 hours for nitrate or nitrite after an initial sample exceeds the MCL is a Tier 1 violation. Other monitoring violations for nitrate are Tier 3.

[9] Water systems using surface water or groundwater under the direct influence of surface water community and non-transient non-community systems serving greater than or equal to 10,000 must comply with the new disinfection byproducts MCLs, disinfectant MRDLs, and related monitoring requirements beginning January 1, 2002. All other community and non-transient non-community systems must meet the MCLs and MRDLs beginning January 1, 2004. Water systems using surface water or groundwater under the direct influence of surface water transient non-community systems serving 10,000 or more persons and using chlorine dioxide as a disinfectant or oxidant must comply with the chlorine dioxide MRDL beginning January 1, 2002. Water systems using surface water or groundwater under the direct influence of surface water transient non-community systems serving fewer than 10,000 persons and using only groundwater not under the direct influence of surface water and using chlorine dioxide as a disinfectant or oxidant must comply with the chlorine dioxide MRDL beginning January 1, 2004.

[10] If any daily sample taken at the entrance to the distribution system exceeds the MRDL for chlorine dioxide and one or more samples taken in the distribution system the next day exceed the MRDL, Tier 1 notification is required. Failure to take the required samples in the distribution system after the MRDL is exceeded at the entry point also triggers Tier 1 notification.

[11] Failure to monitor for chlorine dioxide at the entrance to the distribution system the day after exceeding the MRDL at the entrance to the distribution system is a Tier 2 violation.

[12] Some water systems must monitor for certain unregulated contaminants listed in s. NR 809.25.

[13] Other waterborne emergencies require a Tier 1 public notice under §141.202(a) for situations that do not meet the definition of a waterborne disease outbreak given in 40 CFR 141.2 but that still have the potential to have serious adverse effects on health as a

result of short-term exposure. These could include outbreaks not related to treatment deficiencies, as well as situations that have the potential to cause outbreaks, such as failure or significant interruption in water treatment processes, natural disasters that disrupt the water supply, chemical spills, or unexpected loading of possible pathogens into the source water.

[14] The department may place other situations in any tier they believe appropriate, based on threat to public safety.

[15] Failure to collect three or more samples for *Cryptosporidium* analysis is a Tier 2 violation requiring special notice as specified in §141.211. All other monitoring and testing procedure violations are Tier 3.

Appendix B to Subchapter VII
Standard Health Effects Language for Public Notification

Contaminant	MCGL[1] mg/L	MCL[2] mg/L	Standard health effects language for public notification
National Primary Drinking Water Regulations:			
A. Microbiologocial Contaminants:			
1a. Total coliform	Zero	See footnote[3]	Coliforms are bacteria that are naturally present in the environment and are used as an indicator that other, potentially-harmful, bacteria may be present. Coliforms were found in more samples than allowed and this was a warning of potential problems.
1b. Fecal coliform/E. coli	Zero	Zero	Fecal coliforms and E. coli are bacteria whose presence indicate that the water may be contaminated with human or animal wastes. Microbes in these wastes can cause short-term effects, such as diarrhea, cramps, nausea, headaches, or other symptoms. They may pose a special health risk for infants, young children, some of the elderly, and people with severely compromised immune systems.
Fecal indicators (GWR): E. coli Enterococci, coliphage	 Zero None None	 TT TT TT	Fecal indicators are microbes whose presence indicates that the water may be contaminated with human or animal wastes. Microbes in these wastes can cause short-term health effects, such as diarrhea, cramps, nausea, headaches, or other symptoms. They may pose a special health risk for infants, young children, some of the elderly, and people with severely compromised immune systems.
Groundwater Rule (GWR) TT violations.	None	TT	Inadequately treated or inadequately protected water may contain disease-causing organisms. These organisms can cause symptoms such as diarrhea, nausea, cramps, and associated headaches.
2a. Turbidity (MCL)[4]	None	1 NTU[5]/5	Turbidity has no health effects.

		NTU	However, turbidity can interfere with disinfection and provide a medium for microbial growth. Turbidity may indicate the presence of disease-causing organisms. These organisms include bacteria, viruses, and parasites that can cause symptoms such as nausea, cramps, diarrhea and associated headaches.
2b. Turbidity (SWTR TT)[6]	None	TT[7]	Turbidity has no health effects. However, turbidity can interfere with disinfection and provide a medium for microbial growth. Turbidity may indicate the presence of disease-causing organisms. These organisms include bacteria, viruses, and parasites that can cause symptoms such as nausea, cramps, diarrhea and associated headaches.
2c. Turbidity (IESWTR TT)[8]	None	TT	Turbidity has no health effects. However, turbidity can interfere with disinfection and provide a medium for microbial growth. Turbidity may indicate the presence of disease-causing organisms. These organisms include bacteria, viruses, and parasites that can cause symptoms such as nausea, cramps, diarrhea and associated headaches.
B. Surface Water Treatment Rule and Interim Enhanced Surface Water Treatment Rule violations:			
3. Giardia lamblia	Zero	TT[9]	Inadequately treated water may contain disease-causing organisms. These organisms include bacteria, viruses, and parasites which can cause symptoms such as nausea, cramps, diarrhea, and associated headaches.
4. Viruses 5. Heterotrophic plate count bacteria[10] 6. Legionella 7. Cryptosporidium			

Appendix B to Subchapter VII - Continued
Standard Health Effects Language for Public Notification

Contaminant	MCGL[1] mg/L	MCL[2] mg/L	Standard health effects language for public notification
C. Inorganic Chemicals:			
8. Antimony	0.006	0.006	Some people who drink water containing antimony well in excess of the MCL over many years could experience increases in blood cholesterol and decreases in blood sugar.
9. Arsenic	0	0.010	Some people who drink water containing arsenic in excess of the MCL over many years could experience skin damage or problems with their circulatory system, and may have an increased risk of getting cancer.
10. Asbestos (10 ìm)	7 MFL[11]	7 MFL[11]	Some people who drink water containing asbestos in excess of the MCL over many years may have an increased risk of developing benign intestinal polyps.
11. Barium	2	2	Some people who drink water containing barium in excess of the MCL over many years could experience an increase in their blood pressure.
12. Beryllium	0.004	0.004	Some people who drink water containing beryllium well in excess of the MCL over many years could develop intestinal lesions.
13. Cadmium	0.005	0.005	Some people who drink water containing cadmium in excess of the MCL over many years could experience kidney damage.
14. Chromium (total)	0.1	0.1	Some people who use water containing chromium well in excess of the MCL over many years could experience allergic dermatitis.
15. Cyanide	0.2	0.2	Some people who drink water containing cyanide well in excess of the MCL over many years could experience nerve damage or problems with their thyroid.

16. Fluoride	4.0	4.0	Some people who drink water containing fluoride in excess of the MCL over many years could get bone disease, including pain and tenderness of the bones. Fluoride in drinking water at half the MCL or more may cause mottling of children's teeth, usually in children less than 9 years old. Mottling, also known as dental fluorosis, may include brown staining and/or pitting of the teeth, and occurs only in developing teeth before they erupt from the gums.
17. Mercury (inorganic)	0.002	0.002	Some people who drink water containing inorganic mercury well in excess of the MCL over many years could experience kidney damage.
18. Nitrate	10	10	Infants below the age of 6 months who drink water containing nitrate in excess of the MCL could become seriously ill and, if untreated, may die. Symptoms include shortness of breath and blue baby syndrome.
19. Nitrite	1	1	Infants below the age of 6 months who drink water containing nitrite in excess of the MCL could become seriously ill and, if untreated, may die. Symptoms include shortness of breath and blue baby syndrome.
20. Total Nitrate and Nitrite	10	10	Infants below the age of 6 months who drink water containing nitrate and nitrite in excess of the MCL could become seriously ill and, if untreated, may die. Symptoms include shortness of breath and blue baby syndrome.
21. Selenium	0.05	0.05	Selenium is an essential nutrient. However, some people who drink water containing selenium in excess of the MCL over many years could experience hair or fingernail losses, numbness in fingers or toes, or problems with their circulation.

22. Thallium	0.0005	0.002	Some people who drink water containing thallium in excess of the MCL over many years could experience hair loss, changes in their blood, or problems with their kidneys, intestines, or liver.
D. Lead and Copper Rule:			
23. Lead	Zero	TT[12]	Infants and children who drink water containing lead in excess of the action level could experience delays in their physical or mental development. Children could show slight deficits in attention span and learning abilities. Adults who drink this water over many years could develop kidney problems or high blood pressure.
24. Copper	1.3	TT[13]	Copper is an essential nutrient, but some people who drink water containing copper in excess of the action level over a relatively short amount of time could experience gastrointestinal distress. Some people who drink water containing copper in excess of the action level over many years could suffer liver or kidney damage. People with Wilson's Disease should consult their personal doctor.
E. Synthetic Organic Chemicals:			
25. 2,4-D	0.07	0.07	Some people who drink water containing the weed killer 2,4-D well in excess of the MCL over many years could experience problems with their kidneys, liver, or adrenal glands.
26. 2,4,5-TP (Silvex)	0.05	0.05	Some people who drink water containing silvex in excess of the MCL over many years could experience liver problems.
27. Alachlor	Zero	0.002	Some people who drink water containing alachlor in excess of the MCL over many years could have problems with their eyes, liver, kidneys, or spleen, or experience anemia, and may have an increased risk of getting cancer.

28. Atrazine	0.003	0.003	Some people who drink water containing atrazine well in excess of the MCL over many years could experience problems with their cardiovascular system or reproductive difficulties.
29. Benzo(a)pyrene (PAHs)	Zero	0.0002	Some people who drink water containing benzo(a)pyrene in excess of the MCL over many years may experience reproductive difficulties and may have an increased risk of getting cancer.
30. Carbofuran	0.04	0.04	Some people who drink water containing carbofuran in excess of the MCL over many years could experience problems with their blood, or nervous or reproductive systems.
31. Chlordane	Zero	0.002	Some people who drink water containing chlordane in excess of the MCL over many years could experience problems with their liver or nervous system, and may have an increased risk of getting cancer.
32. Dalapon	0.2	0.2	Some people who drink water containing dalapon well in excess of the MCL over many years could experience minor kidney changes.
33. Di (2-ethylhexyl) adipate	0.4	0.4	Some people who drink water containing di (2-ethylhexyl) adipate well in excess of the MCL over many years could experience toxic effects such as weight loss, liver enlargement or possible reproductive difficulties.
34. Di (2-ethylhexyl) phthalate	Zero	0.006	Some people who drink water containing di (2-ethylhexyl) phthalate well in excess of the MCL over many years may have problems with their liver, or experience reproductive difficulties, and may have an increased risk of getting cancer.
35. Dibromochloropropane	Zero	0.0002	Some people who drink water containing

			DBCP in excess of the MCL over many years could experience reproductive difficulties and may have an increased risk of getting cancer.
36. Dinoseb	0.007	0.007	Some people who drink water containing dinoseb well in excess of the MCL over many years could experience reproductive difficulties.
37. Dioxin (2,3,7,8-TCDD)	Zero	$3x10^{-8}$	Some people who drink water containing dioxin in excess of the MCL over many years could experience reproductive difficulties and many have an increased risk of getting cancer.
38. Diquat	0.02	0.02	Some people who drink water containing diquat in excess of the MCL over many years could get cataracts.
39. Endothall	0.1	0.1	Some people who drink water containing endothall in excess of the MCL over many years could experience problems with their stomach or intestine.
40. Endrin	0.002	0.002	Some people who drink water containing endrin in excess of the MCL over many years could experience liver problems.
41. Ethylene dibromide	Zero	0.00005	Some people who drink water containing ethylene dibromide in excess of the MCL over many years could experience problems with their liver, stomach, reproductive system, or kidneys, and may have an increased risk of getting cancer.
42. Glyphosate	0.7	0.7	Some people who drink water containing glyphosate in excess of the MCL over many years could experience problems with their kidneys or reproductive difficulties.
43. Heptachlor	Zero	0.0004	Some people who drink water containing heptachlor in excess of the MCL over many years could experience liver damage and may have an increased risk of getting

			cancer.
44. Heptachlor epoxide	Zero	0.0002	Some people who drink water containing heptachlor epoxide in excess of the MCL over many years could experience liver damage, and may have an increased risk of getting cancer.
45. Hexachlorobenzene	Zero	0.001	Some people who drink water containing hexachlorobenzene in excess of the MCL over many years could experience problems with their liver or kidneys, or adverse reproductive effects, and may have an increased risk of getting cancer.
46. Hexachlorocyclo-pentadiene	0.05	0.05	Some people who drink water containing hexachlorocyclopentadiene well in excess of the MCL over many years could experience problems with their kidneys or stomach.
47. Lindane	0.0002	0.0002	Some people who drink water containing lindane in excess of the MCL over many years could experience problems with their kidneys or liver.
48. Methoxychlor	0.04	0.04	Some people who drink water containing methoxychlor in excess of the MCL over many years could experience reproductive difficulties.
49. Oxamyl (Vydate)	0.2	0.2	Some people who drink water containing oxamyl in excess of the MCL over many years could experience slight nervous system effects.
50. Pentachlorophenol	Zero	0.001	Some people who drink water containing pentachlorophenol in excess of the MCL over many years could experience problems with their liver or kidneys, and may have an increased risk of getting cancer.
51. Picloram	0.5	0.5	Some people who drink water containing picloram in excess of the MCL over many years could experience problems with

			their liver.
52. Polychlorinated biphenyls	Zero	0.0005	Some people who drink water containing PCBs in excess of the MCL over many years could experience changes in their skin, problems with their thymus gland, immune deficiencies, or reproductive or nervous system difficulties, and may have an increased risk of getting cancer.
53. Simazine	0.004	0.004	Some people who drink water containing simazine in excess of the MCL over many years could experience problems with their blood.
54. Toxaphene	Zero	0.003	Some people who drink water containing toxaphene in excess of the MCL over many years could have problems with their kidneys, liver, or thyroid, and may have an increased risk of getting cancer.
F. Volatile Organic Chemicals:			
55. Benzene	Zero	0.005	Some people who drink water containing benzene in excess of the MCL over many years could experience anemia or a decrease in blood platelets, and may have an increased risk of getting cancer.
56. Carbon tetrachloride	Zero	0.005	Some people who drink water containing carbon tetrachloride in excess of the MCL over many years could experience problems with their liver and may have an increased risk of getting cancer.
57. Chlorobenzene (monochlorobenzene)	0.1	0.1	Some people who drink water containing chlorobenzene in excess of the MCL over many years could experience problems with their liver or kidneys.
58. *o*-Dichlorobenzene	0.6	0.6	Some people who drink water containing o-dichlorobenzene well in excess of the MCL over many years could experience problems with their liver, kidneys, or circulatory systems.

59. *p*-Dichlorobenzene	0.075	0.075	Some people who drink water containing p-dichlorobenzene in excess of the MCL over many years could experience anemia, damage to their liver, kidneys, or spleen, or changes in their blood.
60. 1,2-Dichloroethane	Zero	0.005	Some people who drink water containing 1,2-dichloroethane in excess of the MCL over many years may have an increased risk of getting cancer.
61. 1,1-Dichloroethylene	0.007	0.007	Some people who drink water containing 1,1-dichloroethylene in excess of the MCL over many years could experience problems with their liver.
62. *cis*-1,2-Dichloroethylene	0.07	0.07	Some people who drink water containing cis-1,2-dichloroethylene in excess of the MCL over many years could experience problems with their liver.
63. *trans*-1,2-Dichloroethylene	0.1	0.1	Some people who drink water containing trans-1,2-dichloroethylene well in excess of the MCL over many years could experience problems with their liver.
64. Dichloromethane	Zero	0.005	Some people who drink water containing dichloromethane in excess of the MCL over many years could have liver problems and may have an increased risk of getting cancer.
65. 1,2-Dichloropropane	Zero	0.005	Some people who drink water containing 1,2-dichloropropane in excess of the MCL over many years may have an increased risk of getting cancer.
66. Ethylbenzene	0.7	0.7	Some people who drink water containing ethylbenzene well in excess of the MCL over many years could experience problems with their liver or kidneys.
67. Styrene	0.1	0.1	Some people who drink water containing styrene well in excess of the MCL over many years could have problems with their liver, kidneys, or circulatory system.

68. Tetrachloroethylene	Zero	0.005	Some people who drink water containing tetrachloroethylene in excess of the MCL over many years could have problems with their liver, and may have an increased risk of getting cancer.
69. Toluene	1	1	Some people who drink water containing toluene well in excess of the MCL over many years could have problems with their nervous system, kidneys, or liver.
70. 1,2,4-Trichlorobenzene	0.07	0.07	Some people who drink water containing 1,2,4-trichlorobenzene well in excess of the MCL over many years could experience changes in their adrenal glands.
71. 1,1,1-Trichloroethane	0.2	0.2	Some people who drink water containing 1,1,1-trichloroethane in excess of the MCL over many years could experience problems with their liver, nervous system, or circulatory system.
72. 1,1,2-Trichloroethane	0.003	0.005	Some people who drink water containing 1,1,2-trichloroethane well in excess of the MCL over many years could have problems with their liver, kidneys, or immune systems.
73. Trichloroethylene	Zero	0.005	Some people who drink water containing trichloroethylene in excess of the MCL over many years could experience problems with their liver and may have an increased risk of getting cancer.
74. Vinyl chloride	Zero	0.002	Some people who drink water containing vinyl chloride in excess of the MCL over many years may have an increased risk of getting cancer.
75. Xylenes (total)	10	10	Some people who drink water containing xylenes in excess of the MCL over many years could experience damage to their nervous system.

G. Radioactive Contaminants:			
76. Beta/photon emitters	Zero	4 mrem/yr[14]	Certain minerals are radioactive and may emit forms of radiation known as photons and beta radiation. Some people who drink water containing beta and photon emitters in excess of the MCL over many years may have an increased risk of getting cancer.
77. Alpha emitters	Zero	15 pCi/L[15]	Certain minerals are radioactive and may emit a form of radiation known as alpha radiation. Some people who drink water containing alpha emitters in excess of the MCL over many years may have an increased risk getting cancer.
78. Combined radium (226 & 228)	Zero	5 pCi/L	Some people who drink water containing radium 226 and 228 in excess of the MCL over many years may have an increased risk of getting cancer.
H. Disinfection Byproducts, Byproduct Precursors, and Disinfectant Residuals: Where disinfection is used in the treatment of drinking water, disinfectants combine with organic and inorganic matter present in water to form chemicals called disinfection byproducts. EPA sets standards for controlling the levels of disinfectants and DBPs in drinking water, including trihalomethanes and haloacetic acids:[16]			
79. Total trihalomethanes	N/A	0.80[17]	Some people who drink water containing trihalomethanes in excess of the MCL over many years may experience problems with their liver, kidneys, or central nervous system, and may have an increased risk of getting cancer.

80. Haloacetic Acids	N/A	0.060[18]	Some people who drink water containing haloacetic acids in excess of the MCL over many years may have increased risk of getting cancer.
81. Bromate	Zero	0.010	Some people who drink water containing bromate in excess of the MCL over many years may have an increased risk of getting cancer.
82. Chlorite	0.08	1.0	Some infants and young children who drink water containing chlorite in excess of the MCL could experience nervous system effects. Similar effects may occur in fetuses of pregnant women who drink water containing chlorite in excess of the MCL. Some people may experience anemia.
83. Chlorine	4 (MRDLG)[19]	4.0 (MRDL)[20]	Some people who use water containing chlorine well in excess of the MRDL could experience irritating effects to their eyes and nose. Some people who drink water containing chlorine well in excess of the MRDL could experience stomach discomfort.
84. Chloramines	4 (MRDLG)	4.0 (MRDL)	Some people who use water containing chloramines well in excess of the MRDL could experience irritating effects to their eyes and nose. Some people who drink water containing chloramines well in excess of the MRDL could experience stomach discomfort or anemia.
85a. Chlorine dioxide, where any 2 consecutive daily samples taken at the entrance to the distribution system are above the MRDL.	0.8 (MRDLG)	0.8 (MRDL)	Some infants and young children who drink water containing chlorine dioxide in excess of the MRDL could experience nervous system effects. Similar effects may occur in fetuses of pregnant women who drink water containing chlorine dioxide in excess of the MRDL. Some people may experience anemia.
85b. Chlorine dioxide,	0.8	0.8	Some infants and young children who

where one or more distribution system samples are above the MRDL.	(MRDLG)	(MRDL)	drink water containing chlorine dioxide in excess of the MRDL could experience nervous system effects. Similar effects may occur in fetuses of pregnant women who drink water containing chlorine dioxide in excess of the MRDL. Some people may experience anemia. *Add for public notification only:* The chlorine dioxide violations reported today include exceedances of the EPA standard within the distribution system which delivers water to consumers. Violations of the chlorine dioxide standard within the distribution system may harm human health based on short-term exposures. Certain groups, including fetuses, infants, and young children, may be especially susceptible to nervous system effects from excessive chlorine dioxide exposure.
86. Control of DBP precursors (TOC)	None	TT	Total organic carbon (TOC) has no health effects. However, total organic carbon provides a medium for the formation of disinfection byproducts. These byproducts include trihalomethanes and haloacetic acids. Drinking water containing these byproducts in excess of the MCL may lead to adverse health effects, liver or kidney problems, or nervous system effects, and may lead to an increased risk of getting cancer.
I. Other Treatment Techniques:			
87. Acrylamide	Zero	TT	Some people who drink water containing high levels of acrylamide over a long period of time could have problems with their nervous system or blood, and may have an increased risk of getting cancer.
88. Epichlorohydrin	Zero	TT	Some people who drink water containing high levels of epichlorohydrin over a long period of time could experience stomach problems, and may have an increased risk of getting cancer.

Appendix B Footnotes:

[1] MCLG--Maximum contaminant level goal.

[2] MCL--Maximum contaminant level.

[3] For water systems analyzing at least 40 samples per month, no more than 5.0 percent of the monthly samples may be positive for total coliforms. For systems analyzing fewer than 40 samples per month, no more than one sample per month may be positive for total coliforms.

[4] There are various regulations that set turbidity standards for different types of systems, including 40 CFR 141.13, the 1989 Surface Water Treatment Rule, and the 1998 Interim Enhanced Surface Water Treatment Rule. The MCL for the monthly turbidity average is 1 NTU; the MCL for the 2-day average is 5 NTU for systems that are required to filter but have not yet installed filtration (40 CFR 141.13).

[5] NTU--Nephelometric turbidity unit.

[6] There are various regulations that set turbidity standards for different types of systems, including 40 CFR 141.13, the 1989 Surface Water Treatment Rule, and the 1998 Interim Enhanced Surface Water Treatment Rule. Systems subject to the Surface Water Treatment Rule (both filtered and unfiltered) may not exceed 5 NTU. In addition, in filtered systems, 95 percent of samples each month shall not exceed 0.5 NTU in systems using conventional or direct filtration and shall not exceed 1 NTU in systems using slow sand or diatomaceous earth filtration or other filtration technologies approved by the department.

[7] TT--Treatment technique.

[8] There are various regulations that set turbidity standards for different types of systems, including 40 CFR 141.13, the 1989 Surface Water Treatment Rule, and the 1998 Interim Enhanced Surface Water Treatment Rule. For systems subject to the interim enhanced surface water treatment rule (systems serving at least 10,000 people, using surface water or groundwater under the direct influence of surface water), that use conventional filtration or direct filtration, after January 1, 2002, the turbidity level of a system's combined filter effluent may not exceed 0.3 NTU in at least 95 percent of monthly measurements, and the turbidity level of a system's combined filter effluent shall not exceed 1 NTU at any time. Systems subject to the interim enhanced surface water treatment rule using technologies other than conventional, direct, slow sand, or diatomaceous earth filtration shall meet turbidity limits set by the department.

[9] Surface water treatment rule and interim enhanced surface water treatment rule treatment technique violations that involve turbidity exceedances may use the health effects language for turbidity instead.

[10] The bacteria detected by heterotrophic plate count are not necessarily harmful. HPC is simply an alternative method of determining disinfectant residual levels. The number of bacteria is an indicator of whether there is enough disinfectant in the distribution system.

[11] Million fibers per liter.

[12] Action Level = 0.015 mg/L.

[13] Action Level = 1.3 mg/L.

[14] Millirems per year.

[15] Picocuries per liter.

[16] Surface water systems and groundwater systems under the direct influence of surface water are regulated under Subpart H of 40 CFR part 141. Community and non-transient non-community systems using groundwater under the direct influence of surface water serving 10,000 or more shall comply with DBP MCLs and disinfectant maximum residual disinfectant levels beginning January 1, 2002. All other community and non-transient non-community systems shall meet the MCLs and MRDLs beginning January 1, 2004. Transient non-community systems using groundwater under the direct influence of surface water serving 10,000 or more persons and using chlorine dioxide as a disinfectant or oxidant shall comply with the chlorine dioxide MRDL beginning January 1, 2002. Transient non-community systems using groundwater under the direct influence of surface water serving fewer than 10,000 persons and systems using only groundwater not under the direct influence of surface water and using chlorine dioxide as a disinfectant or oxidant shall comply with the chlorine dioxide MRDL beginning January 1, 2004.

[17] The MCL for total trihalomethanes is the sum of the concentrations of the individual trihalomethanes.

[18] The MCL for haloacetic acids is the sum of the concentrations of the individual haloacetic acids.

[19] MRDLG--Maximum residual disinfectant level goal.

[20] MRDL--Maximum residual disinfectant level.

Appendix C to Subchapter VII
List of Acronyms Used in Public Notification Regulation

CCR .....Consumer Confidence Report
CWS.....Community Water System
DBP .....Disinfection Byproduct
EPA.....Environmental Protection Agency
HPC.....Heterotrophic Plate Count
IESWTR .Interim Enhanced Surface Water Treatment Rule
IOC .....Inorganic Chemical
LCR.....Lead and Copper Rule
MCL.....Maximum Contaminant Level
MCLG.....Maximum Contaminant Level Goal
MRDL ...Maximum Residual Disinfectant Level
MRDLG..Maximum Residual Disinfectant Level Goal
NCWS.....Non-Community Water System
NPDWR..National Primary Drinking Water Regulation
NTNCWS .....Non-Transient Non-Community Water System
NTU .....Nephelometric Turbidity Unit
OGWDW Office of Groundwater and Drinking Water
OW.....Office of Water
PN .....Public Notification
PWS .....Public Water System
SDWA.....Safe Drinking Water Act
SMCL ....Secondary Maximum Contaminant Level
SOC.....Synthetic Organic Chemical
SWTR .....Surface Water Treatment Rule
TCR.....Total Coliform Rule
TT .....Treatment Technique
TWS.....Transient Non-Community Water System
VOC.....Volatile Organic Chemical

Subchapter VIII – Initial Distribution System Evaluation

NR 809.97 Initial Distribution System Evaluations. (1) GENERAL REQUIREMENTS. The requirements of this subchapter establish monitoring and other requirements for identifying compliance monitoring locations for determining compliance with maximum contaminant levels for total trihalomethanes (TTHM) and haloacetic acids five (HAA5) under ss. NR 809.60 to 809.64 . Systems shall use an Initial Distribution System Evaluation (IDSE) to determine locations with representative high TTHM and HAA5 concentrations throughout their distribution system. IDSEs are used in conjunction with, but separate from, compliance monitoring under ss. NR 809.565 and 809.566, to identify and select compliance monitoring locations for Stage 2 DBP.

(2) APPLICABILITY. IDSEs are required for the following public water systems:

(a) A community water system that uses a primary or residual disinfectant other than ultraviolet light or delivers water that has been treated with a primary or residual disinfectant other than ultraviolet light.

(b) A nontransient noncommunity water system that serves at least 10,000 people and uses a primary or residual disinfectant other than ultraviolet light or delivers water that has been treated with a primary or residual disinfectant other than ultraviolet light.

(c) A community water system that is part of a combined distribution system and receives some or all of its water from a public water system that uses a primary or residual disinfectant other than ultraviolet light.

(3) SCHEDULE. (a) All public water systems identified in sub. (2) shall comply with the requirements of this subchapter on the schedule in the Table W.

Table W
IDSE Schedule

System population	Systems shall submit a standard monitoring plan or system specific study plan[1] or 40/30 certification[2] to EPA or department by or receive very small system waiver from EPA or the department by	Monitoring shall start for standard monitoring by	Systems shall have a completed standard monitoring or system specific study submitted by	Systems shall submit their IDSE report to EPA or the department by[3]
Systems that are not part of a combined distribution system and systems that serve the largest population in the combined distribution system				
≥100,000	October 1, 2006	October 1, 2007	September 30, 2008	January 1, 2009.
50,000–99,999	April 1, 2007	April 1, 2008	March 31, 2009	July 1, 2009.
10,000–49,999	October 1, 2007	October 1, 2008	September 30, 2009	January 1, 2010.

<10,000 (CWS Only)	April 1, 2008	April 1, 2009	March 31, 2010	July 1, 2010.
Systems that are part of a combined distribution system				
Wholesale system or consecutive system	—at the same time as the system with the earliest compliance date in the combined distribution system	at the same time as the system with the earliest compliance date in the combined distribution system	—at the same time as the system with the earliest compliance date in the combined distribution system	—at the same time as the system with the earliest compliance date in the combined distribution system.

[1]If, within 12 months after the date identified in this column, EPA or the department does not approve the plan or notify the system that it has not yet completed its review, the system may consider the plan approved. The system shall implement that plan and complete standard monitoring or a system specific study no later than the date identified in the third column.

[2]You shall submit your 40/30 certification under s. NR 809.974 by the date indicated.
[3]If, within three months after the date identified in this column or if the system has a population between 10,000 and 49,999 then nine months after the date identified in this column, EPA or the department does not approve your IDSE report or notify you that it has not yet completed its review, the system may consider the report submitted as approved and shall implement the recommended Stage 2 DBP compliance monitoring as required under s. NR 809.61.

(b) For the purpose of the schedule in par. (a) Table W, EPA or the department may determine that a combined distribution system does not include certain consecutive systems based on factors such as receiving water from a wholesale system only on an emergency basis or receiving only a very small percentage and very small volume of water from a wholesale system. The department may also determine that the combined distribution system does not include certain wholesale systems based on factors such as delivering water to a consecutive system only on an emergency basis or delivering only a small percentage and small volume of water to a consecutive system.

(4) IDSE GENERAL REQUIREMENTS. All public water systems required to perform the IDSE shall meet the requirements of one of the following:

(a) Complete a standard monitoring that meets the requirements under s. NR 809.971.

(b) Complete a system specific study that meets the requirements under s. NR 809.973.

(c) Certify to EPA or the department that you meet 40/30 certification criteria under s. NR 809.974.

(d) Qualify for a very small system waiver under s. NR 809.975.

(5) GENERAL ELIGIBILITY CRITERIA FOR 40/30 CERTIFICATION. To qualify for 40/30 certification a public water system shall have completed the required compliance samples under s. NR 809.565 for the time period specified under s. NR 809.974(1).

(6) GENERAL ELIGIBILITY CRITERIA FOR VERY SMALL SYSTEM WAIVER. To be eligible for the very small system waiver under s. NR 809.974 a public water system shall have taken

TTHM and HAA5 samples and completed the required compliance sampling under s. NR 809.565.

(7) SYSTEMS WITH M/R VIOLATIONS UNDER STAGE 1 DBP. Public water systems that have not taken the required samples under s. NR 809.565, shall conduct standard monitoring under s. NR 809.971 or a system specific study under s. NR 809.973.

(8) ANALYTICAL METHODS. To demonstrate compliance with the requirements of this subchapter the analytical methods under s.NR 809.563(2) Table R shall be used for all monitoring required under this subchapter.

(9) IDSE results will not be used for the purpose of determining compliance with MCLs under s. NR 809.566.

NR 809.971 Standard monitoring. (1) STANDARD MONITORING PLAN. (a) Systems that choose to complete a standard monitoring plan to fulfill the requirements of this subchapter shall comply with all of the following:

1. The standard monitoring plan shall include a schematic of the distribution system, including distribution system entry points and their sources, and storage facilities, indicating locations and dates of all projected standard monitoring sample locations, and all projected compliance monitoring under s. NR 809.61.
2. The standard monitoring plan shall include justification of standard monitoring location selection and a summary of data you relied on to justify standard monitoring location selection.
3. The standard monitoring plan shall specify the population served and system type surface water, groundwater or GWUDI.
4. The system shall retain a complete copy of its standard monitoring plan submitted under this paragraph, including any EPA or department modifications of the standard monitoring plan, for as long as the system is required to retain the IDSE report under sub. (3)(d).

(b)The system shall prepare and submit its standard monitoring plan to the department according to the schedule in s. NR 809.97(3) Table W

(2) STANDARD MONITORING. Systems that choose to complete standard monitoring to fulfill their IDSE requirement under this subchapter shall comply with all of the following:

(a) Standard monitoring shall be conducted as indicated in Table X.

(b) Dual sample sets shall be collected, at the same time, at each monitoring location identified in the standard monitoring plan. One sample in the dual sample set shall be analyzed for TTHM; the other sample shall be analyzed for HAA5.

(c) One dual sample set shall be collected during the peak historical month for TTHM levels or HAA5 levels or the month of warmest water temperature. Systems shall review an available compliance study, or operational data to determine the peak historical month for TTHM or HAA5 levels or warmest water temperature.

Table X
Standard monitoring requirements

Source water type	Population size category	Monitoring periods and frequency of sampling	Distribution system monitoring locations[1]				
			Total per monitoring period	Near entry points	Average residence time	High TTHM locations	High HAA5 locations

Surface water or GWUDI							
	<500 consecutive systems	one (during peak historical month)[2]	2	1		1	
	<500 non-consecutive systems		2			1	1
	500–3,300 consecutive systems	four (every 90 days)	2	1		1	
	500–3,300 non-consecutive systems		2			1	1
	3,301–9,999		4		1	2	1
	10,000–49,999	six (every 60 days)	8	1	2	3	2
	50,000–249,999		16	3	4	5	4
	250,000–999,999		24	4	6	8	6
	1,000,000–4,999,999		32	6	8	10	8
	≥5,000,000		40	8	10	12	10
Ground-water							
	<500 consecutive systems	one (during peak historical month)[2]	2	1		1	
	<500 non-consecutive systems		2			1	1
	500–9,999	four (every	2			1	1

		90 days)					
	10,000–99,999		6	1	1	2	2
	100,000–499,999		8	1	1	3	3
	≥500,000		12	2	2	4	4

[1]A dual sample set shall be taken at each monitoring location during each monitoring period.

[2]The peak historical month is the month with the highest TTHM or HAA5 levels or the warmest water temperature.

(d) Samples shall be collected at locations other than the existing monitoring locations under s. NR 809.566. These monitoring locations shall be distributed throughout the distribution system.

(e) If the number of entry points to the distribution system is fewer than the specified number of entry point monitoring locations, excess entry point samples shall be replaced equally at high TTHM and HAA5 locations. If there is an odd extra location number, the system shall take a sample at a high TTHM location. If the number of entry points to the distribution system is more than the specified number of entry point monitoring locations, the system shall take samples at entry points to the distribution system having the highest annual water flows.

(f) Monitoring under this subchapter may not be reduced by EPA or the department.

(3) IDSE REPORT FOR THE STANDARD MONITORING. IDSE reports shall include all of the following elements: (a) The IDSE report shall include all TTHM and HAA5 analytical results from Stage 1 DBP compliance monitoring taken under s. NR 809.565 and all standard monitoring conducted during the period of the IDSE as individual analytical results and as locational running annual averages presented in a tabular or spreadsheet format acceptable to the EPA or the department.

(b) The IDSE report shall include an explanation of any deviations from the standard monitoring plan approved by EPA or the department.

(c) The IDSE report shall provide recommendations and justifications of compliance monitoring locations and timing based on the protocol under s. NR 809.976.

(d) A complete copy of the IDSE report submitted under this subchapter shall be retained for 10 years after the date of submittal of the report to EPA or the department. If the EPA or the department modifies the monitoring requirements recommended in the IDSE report or if the EPA or the department approves alternative monitoring locations, a copy of the EPA's or the department's notification shall remain on file for 10 years after the date of that notification. A copy of the IDSE report and any EPA or department notification shall be available for review by the EPA, the department or the public.

(e) The IDSE report shall be submitted to EPA or the department according to the schedule under s. NR 809.97(3) Table W.

NR 809.973 System specific studies.

(1) SYSTEM SPECIFIC STUDY PLAN. Systems that choose to complete a system specific study plan to fulfill the requirements of the IDSE report shall base that plan on either existing monitoring results as required under par. (a) or modeling as required under par. (b).

(a) *Use of existing monitoring results.* Existing monitoring results may only be used to complete the system specific study plan if all the monitoring results were collected before the date the system was required to begin monitoring under s. NR 809.97(3). The monitoring results and analysis shall meet the criteria in subd. 1. and 2.

1. *Minimum requirements.* a. TTHM and HAA5 results shall be based on samples collected and analyzed in accordance with ss. NR 809.563 and 809.565. Samples shall be collected no earlier than five years prior to the system specific study plan submission date under s. NR 809.97(3) Table W.

b. The monitoring locations and frequency shall meet the conditions identified in Table Y. Each location shall have been sampled once during the peak historical month for TTHM levels or HAA5 levels or in the month of warmest water temperature for every 12 months of data submitted for that location. Monitoring results shall include all compliance monitoring results collected under s. NR 809.565 plus additional monitoring results as necessary to meet minimum sample requirements.

Table Y
Minimum requirements for existing monitoring results

System Type	Population size category	Number of monitoring locations	Number of samples	
			TTHM	HAA5
Subpart H:				
	<500	3	3	3
	500–3,300	3	9	9
	3,301–9,999	6	36	36
	10,000–49,999	12	72	72
	50,000–249,999	24	144	144
	250,000–999,999	36	216	216
	1,000,000–4,999,999	48	288	288
	≥ 5,000,000	60	360	360
Groundwater:				
	<500	3	3	3
	500–9,999	3	9	9
	10,000–99,999	12	48	48
	100,000–499,999	18	72	72

	≥ 500,000	24	96	96

2. *Reporting monitoring results for the site specific study plan.* The site specific study plan report shall include all of the following information:

a. All previously collected monitoring results with a written certification from the system that the reported monitoring results include all compliance and non-compliance results generated during the time period beginning with the first reported result and ending with the most recent results required under s. NR 809.565.

b. The owner of operator of the system shall certify that the samples were representative of the entire distribution system and that treatment, and the distribution system has not changed significantly since the samples were collected.

c. The study monitoring plan shall include a schematic of the system's distribution system including distribution system entry points and their sources, and storage facilities, indicating the locations and dates of all completed system specific study monitoring.

d. The system specific study plan shall specify the population served and system source water type surface water, GWUDI or groundwater.

e. A complete copy of the system specific study plan submitted under this subchapter shall be retained for 10 years after the date of submittal of the report to EPA or the department, including any EPA or department modification of the system specific study plan.

f. The EPA or the department may reject some of the data; if this occurs the system may at the discretion of the EPA or the department either conduct additional monitoring to replace rejected data on a schedule that EPA or the department approves or shall conduct standard monitoring under s. NR 809.971.

(b) *Use of modeling.* Systems may comply with the IDSE requirements through the analysis of an extended period simulation hydraulic model. The extended period simulation hydraulic model and analysis shall meet all of the following criteria:

1. *Simulation time*. The model shall simulate 24 hour variation in demand and show a consistently repeating 24 hour pattern of residence time.

2. *Model criteria.* The model shall represent the all of the following criteria:

a. 75% of pipe volume.

b. 50% of pipe length.

c. All pressure zones.

d. All 12-inch diameter and larger pipes.

e. All 8-inch and larger pipes that connect pressure zones, influence zones from different sources, storage facilities, major demand areas, pumps, and control valves, or are known or expected to be significant conveyors of water.

f. All 6-inch and larger pipes that connect remote areas of a distribution system to the main portion of the system.

g. All storage facilities with standard operations represented in the model.

h. All active pump stations with controls represented in the model.

i. All active control valves.

2. *Model calibration.* The model shall be calibrated, or have calibration plans, for the current configuration of the distribution system during the period of high TTHM formation potential. All storage facilities shall be evaluated as part of the calibration

process. All required calibration shall be completed no later than 12 months after plan submission.

3. Reporting modeling for the site specific study plan. The system shall include all of the following information in the specific study plan submitted to EPA or the department:

a. A table or spreadsheet of the data demonstrating that the model meets requirements in subds. 1., 2. and 3.

b. A description of all calibration activities undertaken, and if calibration is complete, a graph of predicted tank levels versus measured tank levels for the storage facility with the highest residence time in each pressure zone, and a time series graph of the residence time at the longest residence time storage facility in the distribution system showing the predictions for the entire simulation period, from time zero until the time it takes to for the model to reach a consistently repeating pattern of residence time.

c. The model output showing preliminary 24 hour average residence time predictions throughout the distribution system.

d. The timing and number of samples representative of the distribution system planned for at least one monitoring period of TTHM and HAA5 dual sample monitoring at a number of locations no less than would be required for the system under standard monitoring in s. NR 809.971(2)(c) Table X during the historical month of high TTHM. These samples shall be taken at locations other than existing compliance monitoring locations required under s. NR 809.565.

e. A description of how all requirements will be completed no later than 12 months after the system submits its system specific study plan.

f. A schematic of the distribution system, including distribution system entry points and their sources, and storage facilities, with notes indicating the locations and dates of all completed system specific study monitoring if calibration is complete and all compliance monitoring under s. NR 809.565.

g. The population served and system source water type surface water, GWUDI or groundwater.

h. Systems shall retain a complete copy of the system specific study plan submitted under par. (b), including any EPA or department modification of the system specific study plan, for as long the IDSE report under par. (c)6. shall be retained.

4. *Failure to complete modeling*. If a system submits a model that does not meet all of the requirements under par. (b) as determined by EPA or the department, the deficiencies shall be corrected and submitted to EPA or the department. If a system fails to correct deficiencies or to submit the corrections to EPA or the department, the system shall conduct standard monitoring under s. NR 809.971.

(c) *IDSE report for site specific studies.* The IDSE report shall include the elements required in pars. (a) and (b). The system shall submit IDSE reports according to the schedule in s. NR 809.97(2). The IDSE report shall include all of the following applicable elements:

1. All TTHM and HAA5 analytical results from Stage 1 DBP compliance monitoring taken under s. NR 809.565 and all system specific study monitoring conducted during the period of the system specific study presented in a tabular or spreadsheet format acceptable to EPA or the department. The IDSE report shall include an explanation of any deviations from the system specific study plan approved by EPA or the department

and include a schematic of your distribution system, the population served, and system type.

2. Systems that choose the modeling provision under par. (b) shall include all of the completed elements described in pars. (b)1. and 2., and a 24-hour time series graph of residence time for each compliance monitoring location selected.

3. The IDSE report shall provide recommendations and justifications of compliance monitoring locations and timing based on the protocol under s. NR 809.976.

4. The IDSE report shall include an explanation of any deviations from the approved system specific study plan.

5. The IDSE report shall include the basis for either the analytical or modeling results and the justification used to select the recommended monitoring locations for use under s. NR 809.61.

6. A complete copy of the IDSE report submitted under this subchapter shall be retained for 10 years after the date of submittal of the report to EPA or the department. If the EPA or the department modifies the monitoring requirements recommended in the IDSE report or if the EPA or the department approves alternative monitoring locations, a copy of the EPA's or the department's notification shall remain on file for 10 years after the date of that notification. A copy of the IDSE report and any EPA or department notification shall be available for review by the EPA, the department or the public.

(d) The IDSE report shall be submitted to EPA or the department according to the schedule under s. NR 809.97(3) Table W.

NR 809.974 40/30 certification.

(1) ELIGIBILITY. Systems are eligible for 40/30 certification by the EPA or the department if the system had no TTHM or HAA5 monitoring violations under ss. NR 809.565 and 809.567 and no individual sample, collected under s. NR 809.565, exceeded 0.040 mg/L for TTHM or 0.030 mg/L for HAA5 during the eight consecutive calendar quarter period beginning no earlier than the date the 40/30 certification was due under s. NR 809.97(3):

40/30 certification was due under s. NR 809.97(3) Table W	**Eligibility for 40/30 certification is based on eight consecutive calendar quarters of compliance monitoring results under s. NR 809.565 beginning no earlier than[1]**
October 1, 2006	January 2004.
(2) April 1, 2007	January 2004.
(3) October 1, 2007	January 2005.
(4) April 1, 2008	January 2005.

[1]Unless the system was on reduced monitoring under s. NR 809.565 and was not required to monitor during the specified period, then eligibility is based on compliance samples taken during the 12 months proceeding the specified period.

(2) 40/30 CERTIFICATION. (a) Systems shall certify to EPA or the department that every individual compliance sample taken under s. NR 809.565 during the periods specified in

sub. (1) was ≤0.040 mg/L for TTHM and ≤0.030 mg/L for HAA5, and that the system did not have any TTHM or HAA5 monitoring violations during the period specified in sub. (1).

(b) EPA or the department may, at their discretion, require a system to complete standard monitoring under s. NR 809.971 or a system specific study under s. NR 809.973 even if the system meets the criteria in sub. (1).

(c) Systems shall retain a complete copy of the certification submitted to EPA or the department for 10 years after the date the certification was submitted.

(d) Systems shall make the certification, all data upon which the certification is based, and any related EPA or department notification available for review by the EPA, the department or the public.

NR 809.975 Very small system waivers.

(1) Systems that serve fewer than 500 people and have taken TTHM and HAA5 samples under s. NR 809.565, are not required to comply with this subchapter unless the EPA or the department notifies them that they shall conduct standard monitoring under s. NR 809.971 or a system specific study under s. NR 809.973.

(2) Systems that serve fewer than 500 people and have not taken TTHM and HAA5 samples under s. NR 809.565, shall conduct standard monitoring under s. NR 809.971 or a system specific study under s. NR 809.973.

NR 809.976 Compliance monitoring location recommendations.

(1) Systems shall use the criteria contained in subs. (2) to (4) for selecting the number, location and sampling time for compliance monitoring under s. NR 809.61.

(2) The number and location of monitoring sites are specified in Table Z based on the population of the system and its source water type. Systems shall use Table Z to determine their routine compliance monitoring locations under s. NR 809.61, unless EPA or the department requires different or additional locations.

Table Z
Number and location of monitoring sites under s. NR 809.61

Source water type	Population size category	Sample Monitoring frequency[1]	Distribution system monitoring location			
			Sample Total per monitoring period[2]	Highest TTHM concentration locations	Highest HAA5 concentration locations	Existing compliance locations under s. NR 809.565
Surface water or GWUDI:						
	<500	per year	2	1	1	
	500–3,300	per quarter	2	1	1	
	3,301–	per quarter	2	1	1	

	9,999					
	10,000–49,999	per quarter	4	2	1	1
	50,000–249,999	per quarter	8	3	3	2
	250,000–999,999	per quarter	12	5	4	3
	1,000,000–4,999,999	per quarter	16	6	6	4
	≥5,000,000	per quarter	20	8	7	5
Ground-water:						
	<500	per year	2	1	1	
	500–9,999	per year	2	1	1	
	10,000–99,999	per quarter	4	2	1	1
	100,000–499,999	per quarter	6	3	2	1
	≥500,000	per quarter	8	3	3	2

[1]All systems shall monitor during month of highest DBP concentrations.

[2]Systems on quarterly monitoring shall take dual sample sets every 90 days at each monitoring location, except for surface water or GWUDI systems serving 500–3,300. Systems on annual monitoring and surface water or GWUDI systems serving 500–3,300 are required to take individual TTHM and HAA5 samples instead of a dual sample set at the locations with the highest TTHM and HAA5 concentrations, respectively. Only one location with a dual sample set per monitoring period is needed if highest TTHM and HAA5 concentrations occur at the same location, and month, if monitored annually.

(3) Systems shall recommend compliance monitoring locations, under s. NR 809.61, based on standard monitoring results, system specific study results, and compliance monitoring results under s. NR 809.565. If a system is required to monitor at more than eight locations, the sequential protocol listed in pars (a) to (j) shall be used to select additional monitoring sites and repeated, as necessary, until the required number of sampling locations identified under sub. (2) Table Z are chosen. The system shall follow the protocol in pars. (a) to (j). Systems that do not have any or enough existing compliance monitoring data under s. NR 809.565 shall repeat the protocol in pars. (a) to (j), without using the provisions of pars. (c) and (g), until the required number of monitoring locations under sub. (2) Table Z are identified.

(a) Location with the highest TTHM locational running annual average (LRAA) not previously selected as a monitoring location under this subsection.

(b) Location with the highest HAA5 LRAA not previously selected as a monitoring location under this subsection.

(c) Existing locations under s. NR 809.565 average residence time compliance monitoring location maximum residence time compliance monitoring location for groundwater systems with the highest HAA5 LRAA that has not previously selected as a monitoring location under this section.

(d) Location with the highest TTHM LRAA that has not previously selected as one of the existing s. NR 809.565 monitoring location under this subsection.

(e) Location with the highest TTHM LRAA not previously selected as one of the existing s. NR 809.565 monitoring location under this subsection.

(f) Location with the highest HAA5 LRAA not previously selected as one of the existing s. NR 809.565 monitoring locations under this subsection.

(g) Existing monitoring location under s. NR 809.565 average residence time compliance monitoring location for surface water or GWUDI systems or maximum residence time compliance monitoring location for groundwater systems with the highest TTHM LRAA not previously selected monitoring location under this subsection.

(h) Location with the highest HAA5 LRAA not previously selected as a monitoring location under this subsection.

(4) Systems may recommend locations other than those specified in pars. (a) to (g) if EPA or the department approves the alternate locations for monitoring under s. NR 809.61 in writing prior to including them in the IDSE report.

(5) Systems shall designate monitoring during the month with the peak historical TTHM and HAA5 concentration, unless the EPA or the department approves another month. Once the peak historical month is designated and if the system is required to conduct routine monitoring at least quarterly, the compliance monitoring under s. NR 809.61 shall be at a regular frequency of every 90 days or fewer.

(6) To the extent possible, compliance monitoring sites under s. NR 809.61 shall be distributed throughout the distribution system.

SECTION 2. NR 810 is created to read:

Chapter NR 810

REQUIREMENTS FOR THE OPERATION AND MAINTENANCE OF PUBLIC WATER SYSTEMS

NR 810.01 Applicability.

NR 810.015 Alternative requirements

NR 810.02 Definitions.

SUBCHAPTER I – GENERAL OPERATIONS

NR 810.03 General operational requirements.

NR 810.04 Certified operator requirement

NR 810.05 Required sampling & testing

NR 810.06 Operational sampling

NR 810.07 Operational reporting

NR 810.08 Drinking water standards

NR 810.09 General treatment and disinfection requirements

NR 810.10 Distribution system normal pressure

NR 810.11 Distribution system fire flow pressure

NR 810.12 Distribution system loss of pressure

NR 810.13 System maintenance

NR 810.14 Water storage facility inspections

NR 810.15 Cross connections and interconnections

NR 810.16 Local well regulation program

NR 810.17 Temporary water service and pressure

NR 810.18 System loss and unaccounted water

NR 810.19 Discharge of system or backwash water

NR 810.20 Approval of operational changes or maintenance projects

NR 810.21 Unattended water treatment plant operation

NR 810.22 Emergency well operation

NR 810.23 Water system security and emergency operations

NR 810.24 Water system capacity

NR 810.25 Operation & maintenance manuals

NR 810.26 Other requirements

SUBCHAPTER II - SURFACE WATER TREATMENT AND GROUNDWATER UNDER THE DIRECT INFLUENCE OF SURFACE WATER TREATMENT OPERATIONS

NR 810.27 General requirements for all surface water and groundwater under the direct influence of surface water systems

NR 810.28 Requirements for covers on water storage structures

NR 810.29 Basic filtration requirements

NR 810.295 Filter backwash handling
NR 810.30 Criteria for avoiding filtration for groundwater under the direct influence of surface water systems
NR 810.31 Disinfection requirements for *Giardia lamblia* and viruses
NR 810.32 Disinfection profiling and benchmarking
NR 810.33 Enhanced treatment requirements for *Cryptosporidium*
NR 810.34 *Cryptosporidium* bin classification for filtered systems
NR 810.35 *Cryptosporidium* treatment requirements for filtered systems
NR 810.36 *Cryptosporidium* treatment requirements for groundwater under the direct influence of surface water systems that do not filter
NR 810.37 *Cryptosporidium* treatment requirement compliance schedule
NR 810.38 Monitoring requirements
NR 810.39 Reporting requirements
NR 810.40 Recordkeeping requirements

SUBCHAPTER III – TOOLBOX OPTIONS FOR MEETING ENHANCED TREATMENT FOR *CRYPTOSPORIDIUM* REQUIREMENTS
NR 810.41 Microbial toolbox options
NR 810.42 Source toolbox components
NR 810.43 Pre-filtration treatment toolbox components
NR 810.44 Treatment performance toolbox components
NR 810.45 Additional filtration toolbox components

SUBCHAPTER IV – INACTIVATION TOOLBOX COMPONENTS AND CT TABLES
NR 810.46 Inactivation toolbox components
NR 810.47 CT table for *Giardia lamblia* when using free chlorine at 0.5° C or lower
NR 810.48 CT table for *Giardia lamblia* when using free chlorine at 5°C
NR 810.49 CT table for *Giardia lamblia* when using free chlorine at 10° C
NR 810.50 CT table for *Giardia lamblia* when using free chlorine at 15° C
NR 810.51 CT table for *Giardia lamblia* when using free chlorine at 20° C
NR 810.52 CT table for *Giardia lamblia* when using free chlorine at 25° C
NR 810.53 CT table for viruses when using free chlorine
NR 810.54 CT table for *Giardia lamblia* when using chlorine dioxide
NR 810.55 CT table for viruses when using chlorine dioxide
NR 810.56 CT table for *Cryptosporidium* when using chlorine dioxide
NR 810.57 CT table for *Giardia lamblia* when using chloramines
NR 810.58 CT table for viruses when using chloramines
NR 810.59 CT table for *Giardia lamblia* when using ozone
NR 810.60 CT table for viruses when using ozone
NR 810.61 CT table for *Cryptosporidium* when using ozone
NR 810.62 UV dose table for *Cryptosporidium*, *Giardia lamblia*, and viruses

NR 810.01 Applicability. This chapter governs the general operation and maintenance of all public water systems, unless noted otherwise within each section. This chapter shall apply to each public water system, unless the public water system meets all of the following conditions:

(1) Consists only of distribution and storage facilities, and does not have any collection or treatment facilities.

(2) Obtains all of its water from, but is not owned or operated by, a public water system to which such regulations apply.

(3) Does not sell water to any person.

(4) Is not a carrier which conveys passengers in interstate commerce.

Note: The authority to promulgate and enforce these rules is contained in chs. 280 and 281, Stats. Pursuant to s. 299.97, Stats., any person who violates this chapter shall forfeit not less than $10 nor more than $5,000 for each violation. Each day of continued violation is a separate offense.

NR 810.015 Alternative requirements. (1) If the owner of a water system determines that compliance with the operation and maintenance requirements of this chapter is impracticable, the owner may submit in writing to the department a request to use alternative criteria. This request shall contain the reasons that compliance with the operation and maintenance criteria is impracticable and alternative criteria for which department approval is sought and all pertinent facts, data, reports and studies supporting the proposed alternative.

(2) If the department determines that compliance with the operation and maintenance requirements of this chapter would be impracticable in any specific case, or that an alternative proposed has additional benefits with adequate safeguards, it may approve alternative criteria which are in substantial compliance with the requirements of this chapter.

NR 810.02 Definitions. In this chapter:

(1) "A.N.S.I." means the American National Standards Institute, 25 West 43rd St, New York, NY 10036.

(2) "A.P.I." means the American Petroleum Institute, 1220 L Street NW, Washington, DC 20005-4070.

(3) "Approval" means the written approval of the department for any project requiring approval pursuant to s. 281.41, Stats., and s. NR 108.03 for community systems, and s. NR 812.09 for non-community systems.

(4) "ASTM" or "ASTM International" means the organization formerly known as the American Society for Testing and Material, 100 Barr Harbor Drive, PO Box C700, West Conshohocken, Pennsylvania 19148-2959.

(5) "A.W.W.A." means the American Water Works Association, 6666 West Quincy Avenue, Denver, Colorado 80235.

(6) "Boil water notice" means a special type of public notice that informs consumers that the water is bacteriologically unsafe and should be boiled prior to consumption. A boil water notice includes all the following information:

(a) The water has tested bacteriologically unsafe for drinking.

(b) All water used for washing of eating utensils, drinking, or cooking should be boiled at a rolling boil for at least one minute.

(c) Ice and any beverages prepared with unboiled water should be discarded.

(d) Precautions listed in pars. (a) to (c) are in effect until further notice.

(7) “Community water system” means a public water system which serves at least 15 service connections used by year-round residents or regularly serves at least 25 year-round residents. Any water system serving 7 or more homes, 10 or more mobile homes, 10 or more apartment units, 10 or more duplex units, or 10 or more condominium units shall be considered a community water system unless information is provided by the owners indicating that 25 year-round residents will not be served.

(8) “Consecutive system” means a public water system that receives some or all of its finished water from one or more wholesale suppliers or wholesaler systems through a master metering system. This system may also be known as a wholesale purchaser or wholesale customer. Delivery may be through a direct connection or through the distribution system of one or more consecutive systems.

(9) "Cross connection" means a connection or potential connection between any part of a water supply system and another environment containing substances in a manner that, under any circumstances, would allow the substances to enter the water supply system by means of back siphonage or back pressure.

(10) “CT” or “CT calc” is the product of the residual disinfectant concentration (C) in mg/l determined before or at the first customer, and the corresponding disinfectant contact time (T) in minutes, i.e., “C” x “T”. If a public water system applies disinfectants at more than one point prior to the first customer, it shall determine the CT of each disinfectant sequence before or at the first customer, to determine the total percent inactivation or “total inactivation ratio.” The inactivation ratio for a single disinfectant sequence is:

$$\frac{CT_{calc}}{CT_{table}}$$

where “CT_{table}” is the CT value required for the target organism and the target level of inactivation as contained in ss. NR 810.47 to 810.61. The sum of the inactivation ratios, or total inactivation ratio for a series of disinfection sequences is:

$$\sum \frac{(CT_{calc})}{CT_{table}}$$

and is calculated by adding together the inactivation ratio for each disinfection sequence. In determining the total inactivation ratio, the public water system owner or operator shall determine the residual disinfectant concentration of each sequence and corresponding contact time before any subsequent disinfection application points. A total inactivation ratio equal to or greater than 1.0 is assumed to provide the target level of disinfection of the target organism.

(11) “Department” means the department of natural resources.

(12) “Diatomaceous earth filtration” means a process resulting in substantial particulate removal in which all of the following occurs:

(a) A precoat cake of diatomaceous earth filter media is deposited on a support membrane (septum).

(b) While the water is filtered by passing through the cake on the septum, additional filter media known as body feed is continuously added to the feed water to maintain the permeability of the filter cake.

(13) “Direct filtration” means a series of processes including coagulation and filtration but excluding sedimentation resulting in substantial particulate removal.

(14) "Disinfectant contact time" ("T" in CT calculations) means the time in minutes that it takes for water to move from the point of disinfectant application or the previous point of disinfectant residual measurement to a point before or at the point where residual disinfectant concentration ("C") is measured.

(a) Where only one "C" is measured, "T" is the time in minutes that it takes for water to move from the point of disinfectant application to a point before or where residual disinfectant concentration ("C") is measured.

(b) Where more than one "C" is measured, "T" is determined as follows:

1. For the first measurement of "C", "T" is the time in minutes that it takes for water to move from the first or only point of disinfectant application to a point before or at the point where the first "C" is measured.

2. For subsequent measurements of "C", "T" is the time in minutes that it takes for water to move from the previous "C" measurement point to the "C" measurement point for which the particular "T" is being calculated.

(c) Disinfectant contact time in pipelines shall be calculated based on "plug flow" by dividing the internal volume of the pipe by the maximum hourly flow rate through the pipe.

(d) Disinfectant contact time within mixing basins and storage reservoirs shall be determined by tracer studies or other department approved equivalent demonstration.

(15) "Disinfection" means a process which inactivates pathogenic organisms in water by chemical oxidants or equivalent agents.

(16) "Disinfection profile" means a summary of daily *Giardia lamblia* inactivation through the treatment plant. The procedure for developing a disinfection profile is contained in s. NR 810.32.

(17) "Displacement zone" means the 3-dimensional subsurface region surrounding an aquifer storage recovery well into which treated drinking water is placed for storage and later recovery.

(18) "Distribution system" means all pipes or conduits by which water is delivered to consumers except piping inside buildings served, water services and private water mains as defined in ch. Comm 81.

(19) "Entry point" means a location in the water system after treatment or chemical addition, if any, but prior to the distribution system.

(20) "Filter profile" means a graphical representation of individual filter performance, based on continuous turbidity measurements or total particle counts versus time for an entire filter run, from startup to backwash inclusively, that includes an assessment of filter performance while another filter is being backwashed.

(21) "Filtration" means a process for removing particulate matter from water by passage through porous media.

(22) "Groundwater" means any of the waters of the state, as defined in s. 281.01(18), Stats. occurring in a saturated subsurface geological formation of rock or soil.

(23) "Groundwater source" means all groundwater obtained from horizontal collectors, infiltration lines, springs, and dug, drilled or other types of wells.

(24) "Groundwater under the direct influence of surface water" or "GWUDI" means any water beneath the surface of the ground with either:

(a) Occurrence of insects or other macroorganisms, algae or large diameter pathogens such as *Giardia lamblia* or *Cryptosporidium,* in greater than or equal to 10% of representative source water samples collected over a period of 6 months, immediately prior to the first or only point of disinfectant application.

(b) Evidence of relatively rapid shifts in water characteristics such as turbidity, temperature, conductivity, or pH which closely correlate to climatological or surface water conditions where the department determines that these shifts are indications of the potential for contamination of the groundwater by the organisms identified in par. (a).

(25) "Living unit" means a residence, apartment unit, condominium unit, duplex unit, manufactured home or other domicile.

(26) "Membrane filtration" means a pressure or vacuum driven separation process in which particulate matter larger than one micrometer is rejected by an engineered barrier, primarily through a size-exclusion mechanism, and which has a measurable removal efficiency of a target organism that can be verified through the application of a direct integrity test. This definition includes the common membrane technologies of microfiltration, ultrafiltration, nanofiltration, and reverse osmosis.

(27) "Municipal water system" means a community water system owned by a city, village, county, town, town sanitary district, utility district, public inland lake and rehabilitation district, municipal water district or a federal, state, county or municipal owned institution for congregate care or correction, or a privately owned water utility serving the foregoing.

(28) "Non-community water system" means a public water system that is not a community water system.

(29) "Non-transient non-community water system" or "NTNCWS" means a non-community water system that regularly serves at least 25 of the same persons over 6 months per year. Examples of non-transient non-community water systems include those serving schools, day care centers and factories.

(30) "NSF" or NSF International" means the organization formerly known as the National Sanitation Foundation, PO Box 130140, 789 N. Dixboro Road, Ann Arbor, Michigan 48113-0140.

(31) "Other-than-municipal water system" or "OTM" means a community water system that is not a municipal water system.

(32) "Person" means an individual, corporation, company, association, cooperative, trust, institution, partnership, state, municipality, or federal agency.

(33) "Public water system" or "system" or "PWS" means a system for the provision to the public of piped water for human consumption through pipes or other constructed conveyances, if the system has at least 15 service connections or regularly serves an average of at least 25 individuals daily at least 60 days out of the year. A public water system is either a "community water system" or a "non-community water system". A system:

(a) Include any collection, treatment, storage and distribution facilities under the control of the operator of a system and used primarily in connection with the system.

(b) Includes any collection or pretreatment storage facilities not under the system's control which are used primarily in connection with the system.

Note: The definition of public water system as regulated by this chapter is broader and includes more water systems than those governed by the public service commission under its definition of a public utility in ch. 196, Stats.

(34) "Residual disinfectant concentration" ("C" in CT calculations) means the concentration of disinfectant measured in mg/l in a representative sample of water.

(35) "Reviewable project" has the same meaning as in s. NR 108.02 (13).

(36) "Slow sand filtration" means a process involving passage of raw water through a bed of sand at low velocity, generally less than 0.4 m/h, resulting in substantial particulate removal by physical and biological mechanisms.

(37) "Supplier of water" or "owner" means any person who owns or operates a public water system.

(38) "Surface water" means all water which is open to the atmosphere and subject to surface runoff.

(39) "Surface water systems" means public water systems using surface water or groundwater under the direct influence of surface water as a source and that are subject to the requirements of 40 CFR 141, subpart H, P, and W, which contains the national primary drinking water regulations.

(40) "Transient non-community water system" or "TNCWS" means a non-community water system that serves at least 25 people at least 60 days of the year but does not regularly serve at least 25 of the same persons over 6 months per year. Examples of transient non-community water systems include those serving taverns, motels, restaurants, churches, campgrounds and parks.

(41) "Utility" means a public utility as defined in ch. 196, Stats.

(42) "UV" means ultraviolet light.

(44) "Virus" means a virus of fecal origin which is infectious to humans by waterborne transmission.

(45) "Water storage facilities" means vented reservoirs, water towers, standpipes and treatment plant basins including ground and elevated storage structures. It does not include hydropneumatic tanks or natural surface water bodies.

(46) "Waterworks" or "water system" means all structures, conduits and appurtenances by means of which water is delivered to consumers except piping and fixtures inside buildings served, and service pipes from buildings to street mains.

(47) "Well" means an excavation or opening into the ground made by digging, boring, drilling, driving or other methods for the purpose of obtaining groundwater.

(48) "Well driller" means a person defined as a well driller by s. 280.01 (7), Stats.

(49) "Wholesale" or "wholesaler system" means a public water system that treats source water as necessary to produce finished water and then delivers some or all of that finished water to another public water system through one or more master meters. Delivery may be through a direct connection or through the distribution system of one or more consecutive systems.

(50) "WPDES permit" means the Wisconsin pollutant discharge elimination system permit issued by the department under ch. 283, Stats., for the discharge of pollutants.

SUBCHAPTER I - GENERAL OPERATIONS

NR 810.03 General operational requirements. The supplier of water shall be responsible for insuring that the public water system is operated and maintained to provide an adequate quantity of safe drinking water to those consumers served by the supplier. This responsibility includes maintaining or contracting for an adequate number of trained staff to perform all duties necessary, performing maintenance and replacement of equipment when necessary to keep the facilities in good operating condition, and providing adequate laboratory testing equipment to control and monitor treatment processes and chemical addition programs. All community suppliers of water shall operate the public water system within the design parameters of ch. NR 811 and all parameters of the specific plan approvals for that system. This responsibility also includes ensuring that sufficient fiscal resources are available for adequate operation and maintenance.

NR 810.04 Certified operator requirement. The supplier of water shall provide certified operators as follows:

(1) Municipal water systems shall provide a certified operator as required by s. NR 108.06(2). Operators shall meet the certification requirements of ss. NR 114.04, 114.12(2) and 114.13.

(2) Other-than-municipal community water systems operators shall meet the requirements of ss. NR 114.30 to 114.32.

(3) Non-transient non-community water systems operators shall meet the requirements of ss. NR 114.30 to 114.32.

(4) Transient non-community water systems are exempted from certified operator requirements.

(5) The department shall be notified within 30 days when the supplier has employed a new operator-in-charge for each subclass. The operator's name, contact information, and certification number shall be sent to the department after being hired.

NR 810.05 Required sampling and testing. The supplier of water shall be responsible for sampling, testing and reporting treatment plant and distribution system water quality information to the department, in accordance with the applicable requirements of chs. NR 108, 809, 811, 140, 149 and this chapter. The department may require the installation of sample hydrants if sufficient, representative sample locations are not reasonably accessible in the distribution system.

NR 810.06 Operational sampling. Sampling and testing, in addition to the required sampling and testing required in s. NR 810.05, shall be performed by the supplier of water as required by the department in writing. The department may require additional sampling and testing when necessary to verify water quantity and quality, treatment plant effectiveness, adequate distribution system operation, and to protect water consumers.

NR 810.07 Operational reporting. (1) All of the following suppliers of water shall submit monthly reports in a form or format as required by the department to the appropriate regional office of the department:

(a) All municipal systems.

(b) Other-than-municipal systems which have chemical or physical treatment.

(c) Any water system with a pumping capacity of 70 gpm or more.

(d) Any other system as required by the department.

(2) Reports shall include all the following data, if applicable:

(a) Daily quantities of water pumped.

(b) Daily quantities of chemicals added to the water.

(c) Daily operation of treatment processes.

(d) Results of chemical, physical, or other tests performed for plant control.

(e) Calculated theoretical daily residuals and residual test results.

(f) Groundwater depth measurements, static and pumping, at least weekly where applicable.

(g) Totals and averages of the above where spaces are provided on the report form.

(h) Other data determined necessary by the department.

(3) For other-than-municipal and non-community systems, the frequency of pumpage and chemical treatment data collection may be reduced by approval of the department in writing, but for those water systems with chemical treatment, in no case shall it be less than twice per week. Reduced frequency shall only be considered in cases where treatment is not required to meet primary drinking water standards for coliform bacteria, fecal coliform, *Cryptosporidium*, *Giardia lamblia*, viruses, nitrate, nitrite, chlorate, or chlorite.

(4) Computer generated forms developed by the water supplier are acceptable if, at a minimum, all the required data are submitted on the form, and if the form of the report receives the approval of the department prior to use. Electronic submittal of the reporting forms shall be allowed if done in a form and format approved by the department.

(5) Monthly reports for municipal water systems shall be signed by the operator-in-charge or an operator certified in the applicable treatment process employed by the supplier of water. At other-than-municipal and non-transient non-community water systems, reports shall be signed by the small system certified operator.

NR 810.08 Drinking water standards. Where practical, the quality of the raw water source shall meet the primary maximum contaminant levels of ch. NR 809 and other applicable requirements of ch. NR 809 and this chapter without treatment. In all cases, the quality of finished water supplied to consumers shall meet the primary drinking water standards contained in ch. NR 809.

NR 810.09 General treatment and disinfection requirements. Department approved treatment shall be provided and operated by each supplier of water where necessary in order to ensure that the finished water supplied to consumers meets the primary maximum contaminant levels contained in ch. NR 809 and the design standards contained in ch. NR 811, where applicable. In addition, all of the following requirements shall be met:

(1) CHEMICAL TREATMENT. (a) All existing and new municipal water systems and all other-than-municipal water systems constructed or modified after the effective date of this rule [LRB insert date] shall be provided with equipment and the necessary appurtenances which can continuously disinfect the water. The department may require the installation of disinfection equipment at existing other-than-municipal water systems where deemed necessary to ensure a safe water supply. Standby disinfection equipment shall be periodically checked and repaired, if necessary, to ensure it will work when it is required.

(b) All surface water treatment plants and other waterworks where treatment is required to produce a water quality meeting the primary maximum contaminant levels

shall be equipped with backup chemical feed equipment for all chemicals required for treatment in the event of failure of the primary equipment.

(c) Written approval from the department is required prior to the addition of any chemical to a community water system. Non-community systems shall refer to s. NR 812.37 for plan approval requirements for chemical feed systems. At systems that treat continuously, a 30-day supply of chemicals shall be kept on hand as required by s. NR 108.06 (3). The 30-day supply shall be based on average day demand and average dose. Chemicals shall meet current A.W.W.A. standards and be approved by the department. Department approval will normally consist of, but is not limited to, certification of the chemical for use in potable water under NSF/ANSI Standard 60. Those suppliers relabeling or repackaging NSF/ANSI 60 certified chemicals shall also be certified. Laboratories evaluating products for compliance with NSF/ANSI Standard 60 shall be certified by the American National Standards Institute. Colored chemicals shall be approved if coloring agents are not used in toxic concentrations or in amounts which impart taste, odor or color to the water supply. The department may require the analysis of chemicals if necessary to insure use of safe chemicals.

Note: Copies of these standards are available for inspection at the office of the department of natural resources and the Legislative Reference Bureau.

(d) Chemical containers shall be labeled to include the chemical name, purity, concentration, and name and address of the supplier.

(e) Requests for the substitution of disinfection agents in lieu of chlorine for bacteriological control shall be submitted to the department for review. Substitute disinfection agents may not be used without specific approval by the department.

(f) Solution tanks shall be maintained in a sanitary condition.

(g) The department may require an assay of chemicals delivered.

(h) A material safety data sheet (MSDS) shall be obtained by the water supplier from the chemical supplier for every chemical.

(2) DISINFECTION OF WATER FROM GROUNDWATER SOURCES. (a) All municipal water systems shall provide continuous disinfection of the water prior to entry to the distribution system within 12 months of the effective date of this rule. [LRB insert date?] For systems that provide disinfection by chlorination, chloramination, or chlorine dioxide, a detectable residual shall be provided throughout the distribution system.

Note: It is recommended that all community systems provide a detectable disinfectant residual throughout the distribution system.

(b) When disinfection of water drawn from a groundwater source is required in order to meet the MCL for total coliform or E. coli contained in ch. NR 809 to maintain bacteriologically safe water, the residual maintained in the distribution system and the residual monitoring shall be as required in ss. NR 809.705(2) and NR 811.43(2). Additional disinfection requirements including disinfectant contact time or compliance with the disinfection requirements of s. NR 810.31(1) may be required by the department on a case-by-case basis. The following conditions, as well as other conditions, are considered by the department to be existing or potential water system public health threats:

1. A public water system history of microbiological contamination in the water source or distribution system by either coliform or noncoliform bacteria.

2. The presence of color in raw water from a well serving a public system.

3. Inadequate construction, i.e. construction which does not meet current requirements of ch. NR 811 or 812, of a well which serves a public water system.

(3) DISINFECTION OF WATER FROM SURFACE WATER AND GROUNDWATER UNDER THE DIRECT INFLUENCE OF SURFACE WATER SOURCES. (a) For free chlorine, the concentration in the water entering the distribution system of any system, primary or consecutive, served by treated surface water shall be at least 0.2 mg/1 at the entry point to the distribution system and detectable throughout the distribution system. For total combined chlorine, the concentration in the water entering the distribution system of any system served by treated surface water shall be at least 1.0 mg/l at the entry point to the distribution system and detectable throughout the distribution system. Residual monitoring of the water entering the distribution system shall be provided as required in s. NR 809.705.

(b) Treatment plant CT values shall meet the applicable requirements found in ss. NR 810.47 to 810.62 at all times.

(4) CONSTRUCTION AND MODIFICATIONS. (a) After construction, maintenance, repair or modification, waterworks facilities shall be disinfected by procedures outlined in the following A.W.W.A. Standards: A100 (August 1, 2006) for wells, C651 (June 1, 2005) for water mains, C652 (August 1, 2002) for water storage facilities, C653 (June 1, 2003) for water treatment plants or C654 (November 1, 2003) for wells. In addition, waterworks may not be placed in service until bacteriological samples have established that the water is safe for consumption in accordance with par. (b).

Note: Copies of these standards are available for inspection at the office of the department of natural resources and the Legislative Reference Bureau, and may be obtained for personal use from the American Water Works Association, 6666 West Quincy Ave., Denver, Colorado, 80235.

(b) At least one bacteriologically safe sample shall be obtained before waterworks are placed into service. In the case of new or reconstructed wells, a minimum of 2 bacteriological safe samples, taken at least 8 hours apart during the test pumping period, or on 2 separate days, shall be obtained. When new systems or extensions on a number of streets are installed, bacteriological samples shall be taken at representative locations to establish that all of the improvements are free of contamination. When water main breaks are repaired in water systems that do not maintain a detectable chlorine residual, a bacteriological sample shall be taken in the area of the break within one working day. The main may be returned to service prior to receiving the results provided that the main has been disinfected and flushed. The supplier shall comply with s. NR 809.31 when system sampling indicates the presence of coliform organisms. For water storage facilities, 2 or more successive safe samples, taken at 24-hour intervals, shall be obtained which indicate bacteriologically safe water or one safe sample shall be obtained only if a free chlorine residual of at least 0.1 mg/l is remaining when the results of the safe sample are reported.

(5) INDIRECT ADDITIVES. Written approval from the department is required prior to the use of any indirect chemical or material that may affect the quality of the water supply due to immersion or incidental contact in the water system. Examples include process media, protective materials such as liners, paints and coatings, sealants, gaskets, fittings and lubricants. Department approval shall include certification of the chemical or material for use in potable water under NSF/ANSI Standard 61. Laboratories evaluating

products for compliance with NSF/ANSI Standard 61 shall be certified by the American National Standards Institute. Written department approval is not required where existing equipment is being replaced with similar equipment during maintenance or repair provided that the supplier of water can document that the equipment used meets the approval requirements of this section.

NR 810.10 Distribution system normal pressure. For community water systems**,** system pumps, the distribution system and related storage facilities shall be operated to maintain a minimum of 35 pounds per square inch and a maximum of 100 pounds per square inch at ground level above the water main at all locations in the distribution system under normal operating conditions. Normal operating conditions include the peak hour demand on the maximum day. Where the storage or primary pumping facilities cannot provide a minimum static pressure of 35 psi throughout the distribution system at street elevation it shall be necessary to create a boosted pressure zone to serve those portions of the system. The use of pressure boosting systems on individual service lines shall be limited to a maximum of 10 individual systems in any given service area. The individual pressure boosting systems shall be owned and maintained by the water system owner. The Department may require pressure testing to determine whether adequate pressures are available.

NR 810.11 Distribution system fire flow pressure. Community water systems with fire protection shall be operated so that under fire flow conditions the residual pressure in the distribution system is not less than 20 pounds per square inch at ground level. Systems shall maintain current flow studies showing the fire flow capability of the system. Fire pumpers may not be connected to fire hydrants if 20 psi cannot be maintained in the system during operation of the pumpers. In addition, the system owner shall notify the fire chief in writing of the location of all fire hydrants that cannot be used by fire pumpers and color code or tag the affected hydrants. The Department may require pressure and flow testing to determine whether adequate flows and pressures are available.

NR 810.12 Distribution system loss of pressure. The supplier of water to community water systems shall be responsible for taking corrective action when positive distribution system pressure is lost in an area affecting 25% or more of the overall distribution system or in an entire pressure zone. In addition to restoring system pressure, the supplier of water shall perform all of the following:

(a) Notify the appropriate regional office of the department as soon as possible, but no later than one working day after the loss of pressure, as to the extent of the problem, cause and corrective actions taken.

(b) Start emergency disinfection of the water supply if the system is not already continuously disinfected. At a minimum, the free chlorine residual shall be 0.2 mg/l at the entry point to the distribution system and detectable throughout the distribution system or the total combined chlorine residual shall be 1.0 mg/l at the entry point and detectable throughout the distribution system. If loss of pressure was limited to one pressure zone, the above disinfection requirements may be restricted to target the affected pressure zone. Higher disinfectant residuals may be required by the department if deemed necessary to

assure a safe water supply. Water mains and storage facilities in the area that lost pressure shall be flushed to remove contaminated water and to quickly establish an adequate disinfectant residual. Emergency disinfection shall be maintained until approval is obtained from the department to cease.

(c) Collect distribution system water samples for bacteriological analyses from the pressure loss area as soon as adequate pressure is returned to the system. The number of samples collected shall increase as the extent of problem areas increases, but in no case may less than 2 samples be collected. The department shall be contacted to determine the number of samples and sampling locations. The supplier shall comply with s. NR 809.31 when system sampling indicates the presence of coliform organisms.

(d) Issue an immediate boil water notice to all affected water consumers unless it is determined by the department that an acute threat to public health does not exist. The boil water notice shall be maintained until approval is obtained from the department to cease.

(e) Notify the public in the area affected as prescribed in s. NR 809.951 unless the department determines that no health hazard has existed.

(f) Take all corrective actions necessary to prevent additional pressure losses.

NR 810.13 System maintenance. Each supplier of water to all public water systems shall perform routine maintenance to ensure proper operation of the water system. Record keeping shall be established to insure proper scheduling.

(1) Each supplier of water to community and nontransient noncommunity water systems shall perform the following:

(a) *Well pump maintenance*. Vertical turbine and submersible well pumps shall be removed and inspected on a regular basis and maintenance provided as needed. A frequency of once every ten years is recommended.

(b) *Well seal inspection*. The seal between the pump base and pump head shall be verified to meet the requirements of ss. NR 811.31(1) or 811.32(1) each time a pump is installed or reinstalled.

(c) *Vessels.* Iron filters, softeners, and other similar closed treatment vessels shall be opened up, where practicable, and inspected at a minimum of once every 5 years.

(d) *Emergency power exercising*. Emergency generators and auxiliary engines shall be exercised a minimum of once per month and quarterly under full load. A log shall be kept that documents when the unit was operated and maintenance that was performed on the unit. Those systems who rent, lease or borrow their generators shall have a contract with the owner of the unit, perform full-load exercising at least annually, and keep records showing when exercising was performed. Those water systems with right angle units requiring mobile tractors shall perform full load exercising at least annually and keep records showing when exercising was performed. Operational and fueling procedures shall be included in the log.

(e) *Hydropneumatic tanks*. Pressure tanks shall be flushed regularly to remove sediment. Tanks equipped with hatches shall have interior inspections a minimum of once every 5 years. Maintenance shall include removal of sediment, cleaning of biofilm, restoration of interior and exterior coating systems to prevent corrosion, cleaning and repair of sight glasses, air volume controls and exercising valves.

(2) Each supplier of water to community water systems shall perform the following:

(a) *Valve exercising.* All distribution system valves shall be exercised a minimum of every 2 to 5 years. The department recommends 5 to 7 years for hydrant lead auxiliary valves.

(b) *Hydrant exercising*. All hydrants shall be exercised at least once every 2 years.

(c) *Hydrant maintenance*. Hydrants shall be maintained in proper working condition, consistent with the manufacturer's recommendations.

(d) *Flushing dead-end mains*. A schedule shall be established for flushing dead-end mains or mains in other areas to remove sediment or water of poor quality.

(e) *Meter testing and calibration*. For utilities, master water meters in wellhouses, high lift pumping stations, booster pumping stations and metering stations shall be tested and calibrated at a minimum frequency of every 2 years or as required by s. PSC 185.83(2). Calibration results shall be documented and be within acceptable levels for the particular meter being calibrated.

NR 810.14 Water storage facility inspections. The interior and exterior of water storage facilities serving public systems shall be regularly inspected and maintained. Inspections of storage facilities 10,000 gallons or greater shall be by a professional tank inspection firm or by a registered professional engineer. Maintenance shall include removal of sediment and biofilm prior to evaluation of structural, mechanical and coating systems. Repairs shall be provided as necessary to ensure good working condition. Interior and exterior paint coatings for steel elevated water storage tanks or treatment structures shall be inspected by a person trained to evaluate the integrity of the paint system and repainted as necessary to maintain structural integrity. The supplier of water may perform the inspection if experienced in paint inspection.

(1) FREQUENCY. All storage facilities shall be inspected a minimum of every 5 years and as required in sub. (2)(a) unless otherwise approved by the department. Repairs or welding on the exterior of a tank may make a special interior inspection necessary. Exterior inspections of vent and overflow screens and hatches shall be conducted once per year by the supplier of water.

(2) METHODS. Any of the following methods are acceptable for the required 5-year interior tank/ water storage facility inspection:

(a) *Drain down inspections.* Drain down inspections include completely draining the tank. Rigging and ladders may be necessary to access all surfaces. The tank shall be cleaned of all sediment prior to inspecting. A drain down inspection shall be utilized a minimum of every ten years or every other inspection. If a tank is known to be in good condition, the frequency for a drain down inspection may be extended to 15 years with department approval.

1. Following all drain down inspections and painting, the interior of the tank shall be disinfected in accordance with one of the methods in AWWA Standard C652-02. A minimum of 2 successive safe samples, taken at 24-hour intervals, shall be obtained which indicate bacteriologically safe water; or one safe sample shall be obtained only if a free chlorine residual of at least 0.1 mg/l is remaining when the results of the safe sample are reported.

2. For all concrete ground reservoirs with cracks or signs of leakage, the top shall be soaked with water and the interior shall be checked for leaks.

(b) *Float down or partial drain inspections.* Float down inspections involve the use of a disinfected inflatable raft and allow access to all levels of the tank. The water level shall be lowered below the normal low operating level to expose the sidewalls of the tank. The tank may remain in service provided that:

1. A minimum 0.5 mg/l chlorine residual is maintained in the tank throughout the inspection.

2. All equipment shall be dedicated for potable water use and is disinfected with a 200 ppm chlorine solution.

3. For all concrete ground reservoirs with cracks or signs of leakage, the top shall be soaked with water and the interior shall be checked for leaks.

4. A minimum of 2 bacteriologically safe samples are obtained from the tank after the inspection, one following the inspection and one 24 hours later.

5. A minimum pressure of 35 psi is maintained throughout the distribution system during the inspection.

(c) *Diver inspections.* Diver inspections shall involve the use of a commercial diver tethered to, and in communication with, the outside. Procedures shall be done in accordance with Section 4.4 of AWWA Standard C652-02 and Section 12.0 of the Consensus Standards for Commercial Diving and Underwater Inspection. The department recommends that the tank be removed from service during the inspection. If the tank is to remain in service during the inspection or the water will be sent to the distribution system following the inspection, the following requirements apply:

1. A minimum 0.5 mg/l chlorine residual shall be maintained in the tank throughout the inspection.

2. All equipment shall be dedicated for potable water use and be disinfected with a 200 ppm chlorine solution. The inspector shall also be disinfected.

3. The inspection of the tank shall be done after the sediment is removed from the bottom of tank and shall include a visual inspection of any expansion joints.

4. For all concrete ground reservoirs with cracks or signs of leakage, the top shall be soaked with water and the interior shall be checked for leaks.

5. A minimum of 2 bacteriologically safe samples shall be obtained from the tank after the inspection, one following and one 24 hours later.

(d) *Robotic inspections.* Robotic inspections shall involve a rover unit with a fiber optic tether and video camera and shall include cleaning capabilities. The tank may remain in service during the inspection provided that:

1. A minimum 0.5 mg/l chlorine residual shall be maintained in the tank throughout the inspection.

2. All equipment entering the tank shall be dedicated for potable water use and be disinfected with a 200 ppm chlorine solution.

3. For all concrete ground reservoirs with cracks or signs of leakage, the top shall be soaked with water and the interior shall be checked for leaks.

4. A minimum of 2 bacteriologically safe samples shall be obtained from the tank after the inspection, one immediately following the inspection and one 24 hours later.

(3) DEPARTMENT NOTIFICATION. The department's regional drinking water staff person shall be given 48 hours prior notice of the date and time of the inspection.

(4) INSPECTION REPORT SUBMITTAL. Upon completion of the water storage facility inspection, a completed department report form shall be submitted to the department's regional drinking water staff person documenting the condition of the storage facility. Copies of any additional reports and videos prepared by the inspector shall also be submitted.

(5) MANHOLE COVER GASKET. Following all inspections and maintenance, the integrity of the gasket between the access manhole cover and curbing shall be checked and replaced if necessary to prevent the entrance of dust and insects. If no gasket is present, one meeting s. NR 811.64(7) requirements shall be provided to prevent the entrance of dust and insects.

NR 810.15 Cross connections and interconnections. Installation or replacement of cross connections is prohibited. Plumbing back-siphonage, cross-connection, and potability control regulations are provided in s. Comm 82.41; water system interconnections are prohibited except as provided in sub. (2). In addition the following requirements shall be met:

(1) CROSS CONNECTION CONTROL PROGRAM. In order to protect the public water supply system, the supplier of water for every municipal water system shall develop and implement a comprehensive control program for the elimination of all existing cross-connections and prevention of all future cross connections to the last flowing tap or end-use device. A record of the cross connection control program shall be kept current and available for annual review by the department. The cross connection control program shall include:

(a) A complete description of the program and the administration procedures, including designation of the inspection or enforcement agency or agencies.

(b) Local authority for implementation of the program, such as ordinance or other governing rule.

(c) A time schedule for surveys and follow up surveys of consumer premises for cross connections including appropriate record keeping. Unless otherwise authorized by the department, each municipal water system shall cause a survey to be conducted for every residential service a minimum of once every ten years or on a schedule matching meter replacement. Unless a detailed alternative schedule is included in the cross connection control program and is approved by the department, each municipal water system shall cause a survey to be conducted for every industrial, commercial and public authority service a minimum of once every 2 years. Completed survey results shall be maintained until corrections and follow up surveys have been made.

(d) A complete description of the methods, devices, and assemblies which will be used to protect the potable water supply. Compliant methods, devices and assemblies are listed in s. Comm 82.41.

(e) Provisions for denial or discontinuance of water service, after reasonable notice, to any premises where an unprotected cross connection exists or where a survey could not be conducted due to denial.

(f) Submission to the department of a copy of an ordinance establishing a cross connection control program, an annual report including a total number of all service connections by category, and a report indicating the number of surveys completed in each category for that year.

(2) INTERCONNECTIONS WITH OTHER ACCEPTABLE WATER SOURCES. Interconnections between the public water supply system and another source of water are prohibited unless permitted by the department in individual cases. Other sources of water may include community and approved private water systems. Approval of the department shall be obtained prior to the interconnection.

NR 810.16 Local well regulation program. Suppliers of water for municipal water systems and communities served by a municipal water system, shall implement a program for the regulation of wells which are not part of the municipal system and are located on premises served by the municipal system. Regulation is required to prevent unused, unsafe and noncomplying wells from acting as vertical conduits for aquifer contamination or as sources of unsafe water that could enter the public system through cross connections. Implementation shall be by local ordinance or utility rule. The ordinance or rule shall include:

(1) A requirement that all water supply wells that do not have valid operational permits issued pursuant to sub. (2), wells which are not currently used, wells which are in noncompliance with ch. NR 812, or wells which test bacteriologically unsafe, shall be properly sealed and abandoned in accordance with ch. NR 812 by an established date not to exceed one year from date of connection to the public system, or date of discovery or construction.

(2) Provisions for a well operation permit renewable not less frequently than every 5 years that will allow retention and operation of wells which are safe and in compliance with ch. NR 812 with the limitation that the well shall be functional and the owner shall demonstrate a need for use. The permit shall require:

(a) That a minimum of one safe sample be taken prior to issuing or reissuing the permit to establish that the water is bacteriologically safe.

(b) That the well and pump system be evaluated by a licensed well driller or pump installer and certified to comply with ch. NR 812 subch. IV, prior to issuing the initial permit and no less than every 10 years afterwards.

(c) Prohibition of unapproved cross-connections between any private well and pump installations and the municipal water system.

(3) Written documentation of the well and pump inspection indicating compliance with ch. NR 812 requirements using standardized forms provided by the department.

(4) Submission of a copy of the well regulation ordinance or rule to the department.

NR 810.17 Temporary water service and pressure. **(1)** Water lines used for temporary water service because of water main breaks or replacement shall be of materials approved either by ch. Comm 82 as plumbing materials or by ch. NR 811 as water main materials. Piping materials may be reused but may not have been previously used for purposes other than providing potable water. The lines shall be disinfected in accordance with AWWA Standard C651-05.

(2) Fire hoses may be used for emergency service to customers. However, the water consumers shall be notified not to use the water provided for drinking or food preparation.

(3) Systems or pressure zones served by a single elevated tank shall maintain normal pressures as specified in s. NR 810.10 when the tank is taken out of service for inspection and maintenance by one of the following methods:

(a) Installation of one or more pressure blow-off valves on a hydrant or hydrants at the opposite end of the system from the source of water.

(b) Installation of a temporary pressure tank connected to the system through a fire hydrant. The hydrant shall be flushed and disinfected prior to being connected to the pressure tank. The connection shall be with a reinforced high pressure neoprene hose dedicated for potable water use. An air compressor or other suitable means shall be provided to add air to the tank. All compressors used to routinely add air to tanks shall be oil-less. Larger capacity compressors that are not oil-less may be used temporarily to fill a tank upon startup, repair or service but shall be fitted with a filter and any other appurtenances necessary to remove particulates and oil. The pressure tank and connecting hose shall be disinfected and sampled in accordance with s. 810.09(4). Adequate security measures shall be provided for the tank and hose.

(4) The connection to a hydrant for purposes other than fire fighting shall meet the requirements in s. Comm 82.41.

NR 810.18 System loss and unaccounted water. All water systems regulated by the public service commission shall be operated to comply with s. PSC 185.85 that defines system losses and sets standards for unaccounted-for water.

NR 810.19 Discharge of system or backwash water. Water discharged to the ground surface or storm sewers as part of flushing the distribution system, draining or disinfecting reservoirs, or as part of operation of a water treatment facility shall comply with the applicable general permit to discharge under the Wisconsin pollutant discharge elimination system (WPDES) as per the provisions of ch. 283, Stats. Discharge directly to a surface water is prohibited unless specific approval is obtained prior to the discharge. Any water reaching a stream or lake shall have a non-detectable chlorine residual.

NR 810.20 Approval of operational changes or maintenance projects. Systems shall notify the department of any operational changes involving adjustment of chemical addition, filtration, or other operational parameters that may impact the quality of water produced. Temporary changes to manage water quality variations do not require department approval provided the operation remains within prior approved target ranges. Use of alternate chemicals, adjustment outside prescribed treatment ranges previously approved by the department, or permanent operational changes may not be made unless approved by the department prior to the change.

Note: Modifications of chemical dosages or changes in chemicals may significantly alter the corrosion characteristics of the water as well as impart odors and tastes. Careful consideration of the impact to water chemistry should be given prior to adjusting chemical treatment.

NR 810.21 Unattended water treatment plant operation. Water treatment plants may be operated remotely or by use of on site supervisory control and data acquisition (SCADA) systems provided the water distribution system has sufficient storage, as determined by engineering analysis, to allow response and resolution to problems. Unattended plants treating for acute contaminants shall be provided with:

(1) Alarms for all critical features including:

(a) Pump failure.

(b) Reservoir, clearwell, or basin overflow or low level.

(c) Station flooding.

(d) Chemical feeder failure.

(e) Chemical feed over or under desired range.

(f) Critical equipment failure.

(g) Intrusion.

(h) Power failure.

(2) An operations manual describing alarms, operator responses to alarms, quality control and challenge testing for the communication and control systems, operation and maintenance of the control systems, and identifying primary and secondary responders.

(3) A flow diagram showing the location of critical features, alarms, and automated controls.

(4) Manual override of all treatment plant operations and functions.

(5) Daily on-site operator visits to verify plant operation and security.

(6) Designation of standby operators during times of unattended operation.

(7) Battery back up for control systems.

(8) Continuous disinfectant residual and turbidity monitoring where appropriate.

(9) Systems using surface water and groundwater under the direct influence of surface water shall:

(a) Submit a report describing the items required in sub. (2) to the department for review and approval.

(b) Demonstrate the operation of the treatment plant by the SCADA system for a period of 6 months.

(c) Provide a list of alarms generated during the demonstration period along with a request for approval to operate unattended.

NR 810.22 Emergency well operation. An emergency well is a well that is not routinely used. The well owner may obtain a written extended well abandonment agreement with the department to allow a normally unused or standby well to remain operational and to delay well abandonment provided that the owner agrees in writing to the following requirements:

(1) The well water entering the distribution system may not exceed any bacteriological or nitrate drinking water standards.

(2) The well water may not contain any volatile organic or synthetic organic contaminant levels exceeding the MCL that could lead to further water quality degradation of the groundwater.

(3) The water system agrees to a 5 year cycle of reevaluation. Where the agreement is continued, it shall be renewed in writing every 5 years.

(4) A 6-year cycle for water quality monitoring is established.

(5) Bacteriological testing is conducted quarterly from the well.

(6) Nitrate is monitored annually from the well.

(7) The well meets current well construction and pump installation standards.

(8) The water system shall notify all customers of the use of the well if the water quality exceeds primary drinking water standards.

(9) The water system agrees to televise any well in excess of 70 years old at least once every 15 years.

(10) The water system will restrict the use of the well if the water quality exceeds the primary drinking water standards to emergency use of no more than 2 days per quarter. The department may authorize an extended period of use for an individual event if contacted by the water system.

NR 810.23 Water system security and emergency operations. (1) WATER SYSTEM SECURITY. Water system buildings and infrastructure access points above ground, such as reservoir hatches, lines used to pump to waste, doors and valve chambers, shall have adequate locks and be secured when not occupied or in use. Security measures that can be taken include: the installation of security fences, hardened/protected locks, exterior warning lights, exterior motion detectors, surveillance cameras; door, window, and hatch intrusion alarms, room motion sensors, steel doors, minimizing the size of windows, eliminating windows or using hardened window materials or iron, steel bars, or mesh over windows. Any security alarms installed shall be connected to telemetry control, SCADA systems, and monitored alarm systems where they are used.

(2) EMERGENCY OPERATIONS. Each community water system shall develop a plan to prepare for, respond to, mitigate and recover from all types of emergency situations, including terrorism, sabotage, natural disasters such as floods and tornadoes, loss of system-wide pressure, and overfeed of chemicals.

(a) Municipal systems shall have an emergency operation plan including, at a minimum:

1. A list of local and state emergency contacts.
2. A system for establishing emergency communications.
3. Any mutual aid agreements the utility has with other communities for sharing personnel, equipment and other resources during an emergency.
4. Standard procedures for emergency water production.
5. A means for sharing information with customers.

(b) Other-than-municipal systems shall have an emergency operation plan including at a minimum:

1. A list of plumbers, electricians or other contractors that would be available to respond in emergency situations.
2. Procedures for obtaining a back-up water source.

NR 810.24 Water system capacity. All new community and non-transient non-community water systems shall develop and maintain adequate financial, managerial and technical capacity to meet the requirements of this chapter and 42 USC 300f to 300j-26. New community and non−transient non−community water systems are defined as those constructed after September 1, 1999, or those that upgrade system type after that date to become a community or nontransient noncommunity water system

Note: 42 USC 300f to 300j-26 is entitled the federal safe drinking water act.

(1) NEW SYSTEM CAPACITY EVALUATION. No new community or non-transient non-community water system may commence operation after September 1, 1999, unless the owner of the proposed water system first demonstrates to the satisfaction of the department that the water system shall have and shall maintain adequate financial,

managerial and technical capacity to meet the requirements of this chapter and the requirements of 42 USC 300f to 300j-26. Additions to water systems constructed prior to September 1, 1999, are exempt from this requirement unless the additions resulted in an upgrade in system type.

Note: 42 USC 300f to 300j-26 is entitled the federal safe drinking water act

(2) CAPACITY EVALUATION SUBMITTAL. To demonstrate financial, managerial and technical capacity to the department, before beginning construction of a water system, the owner of a proposed community or non-transient non-community water system shall submit to the department a system capacity evaluation that includes all of the following:

(a) A written description of the water system design that includes all of the following:

1. For groundwater systems, the proposed well construction and the name of the water-bearing formation.

2. For surface water systems, the name of the source water body and the intake length and intake location.

3. Pumping capacity.

4. Water treatment.

5. Water storage volume.

6. Length and diameter of water mains.

7. Pressure range within the water system.

8. Location of any pressure reducing valves or pressure booster stations.

9. Map or plat showing the proposed water system.

(b) Evaluation of the potential for the water quality to be out of compliance with any of the primary or secondary standards of this chapter. For groundwater systems, this evaluation shall be based on a review of water quality information available from nearby existing wells or on the results of water quality monitoring from a test well. For surface water systems, this evaluation shall be based on water quality monitoring from the surface water.

(c) Anticipated average and maximum daily water use for the proposed water system.

(d) For groundwater systems, a site assessment that includes all of the following:

1. The separation distances between the well and potential sources of contamination within the proposed wellhead protection area.

2. Any violation of the applicable separation distances contained in chs. NR 811 and 812.

3. The proximity of the well to any wetlands.

4. The location of the well in relation to the 100-year flood elevation.

(e) For surface water systems, a source water assessment that includes the identification of potential sources of contamination in relation to the intake and the susceptibility of the water system to contamination.

(f) Anticipated number of industrial, commercial and residential water services.

(g) Initial and projected customer population and service area.

(h) Information for the identification, location and contact of the water system designer including the name, address, and telephone number of the system designer and designer's firm.

(i) Status of all department permits and approvals related to the construction of the water system.

(j) Information for the identification, location and contact of the water system owner including the name, address and telephone number of the water system owner and the extent of the owner's responsibility for the water system.

(k) Information for the identification, location and contact of the water system manager including the name, address and telephone number of the system manager.

(l) Information for the identification, location, and contact of the water system operator including the name, address and telephone number of the designated or certified water system operator. If an operator has not been selected prior to submitting the capacity evaluation, a timetable for hiring an operator shall be included as part of the capacity evaluation in lieu of the information for the identification, location and contact of the water system operator. The water system may not be placed into operation until the department is provided with the information for the identification, location and contact of the water system operator required in this paragraph.

(m) A plan identifying all sample locations for all monitoring required under the safe drinking water act.

(n) Description of the operational procedures required by this chapter, chs. NR 809 and 811 and PSC 185 related to wellhead protection, well abandonment, cross-connection control, operational reporting, meter testing, hydrant and valve exercising and operator certification.

(o) Description of the rate or fee mechanism for other-than-municipal water systems.

(p) Copy of the public service commission certificate authorizing the construction and operation, and estimating rates, for municipal water systems regulated by the public service commission.

(q) Description of the method of payment for the construction and operation of the water system for non-transient non-community water systems.

(r) Statement from the water system owner on the financial capacity of the water system to meet the requirements of this chapter.

(3) CAPACITY EVALUATION FORM. The capacity evaluation shall be submitted on a form provided by the department or in a format approved by the department.

Note: Capacity evaluation forms may be obtained from the department bureau of drinking water and groundwater at no charge by writing to Bureau of Drinking Water and Groundwater, Box 7921, Madison, WI 53707.

(4) REQUIRED QUALIFICATIONS. The information in sub. (2) (a) to (e) shall be prepared by a professional engineer for municipal water systems and by a professional engineer or licensed well driller for other-than-municipal or non-transient non-community water systems.

(5) WAIVER PROCEDURE FOR NON-COMMUNITY WATER SYSTEMS. The department may waive the requirement for the owner to supply information on well construction, well location, water quality monitoring, and operational procedures listed in sub. (2) (a) to (n) for non-community water systems provided that the owner acknowledges conformance to the requirements for well construction, well location, water quality monitoring, and water system operation contained in this chapter and ch. NR 812.

(6) ENGINEERING OR DESIGN REPORT. A single engineering or design report may be submitted to satisfy the requirements of s. NR 811.09 (3) and (4) and the capacity evaluation required by sub. (2).

(7) DEPARTMENT APPROVAL OF SYSTEM CAPACITY. The construction of any new non-transient non-community or community water system may not commence without department approval of the system capacity evaluation demonstrating technical, financial, and managerial capacity required in this section.

(8) DENIAL OF WATER SYSTEM CAPACITY. The department may deny approval of the system capacity evaluation for any of the following reasons:

(a) The water system design does not conform to the applicable design and location standards, or approved variances to the standards, contained in chs. NR 811 and 812 and Comm 82.

(b) The water system operational procedures do not meet the applicable requirements of ch. PSC 185 or of this chapter and ch. NR 811 related to wellhead protection, well abandonment, cross-connection control, operational reporting, meter testing, hydrant and valve exercising, and operator certification.

(c) The water system monitoring plan does not conform to the applicable monitoring requirements of this chapter and ch. NR 809, approved variances to the requirements of this chapter and ch. NR 809, or to monitoring requirements established as part of the department construction approval under chs. NR 811 and 812.

(d) The system capacity evaluation is incomplete.

(e) The information provided does not demonstrate adequate financial capacity to meet the requirements of this chapter.

NR 810.25 Operation and maintenance manuals. All community water systems providing treatment, including chemical addition, shall provide training for staff in the operation and maintenance of the equipment and maintain up-to-date manuals for the operation and maintenance of the equipment.

NR 810.26 Other requirements. (1) AUTHORIZATION FOR OPERATION OF NEW COMMUNITY WATER SYSTEMS OR IMPROVEMENTS TO EXISTING SYSTEMS. Before a new community water system or improvements to a community water system can be placed into service, written authorization of the department shall be obtained.

(a) To obtain authorization for operation of a new water system, the owner shall meet the following requirements:

1. An inspection of the facilities shall be made by a representative of the department to determine if construction is in accordance with the approved plans and specifications. Deficiencies shall be corrected prior to startup or by a specified compliance date, as determined by the significance of the deficiency.

2. The department shall be informed in writing of the name of the certified waterworks operator who will be in charge of any community water system.

3. The owner of a municipal water system shall have adopted cross-connection and well abandonment ordinances or rules.

4. The owner of a municipal water system shall have an approved wellhead protection plan.

5. The owner of each community water system shall have an emergency response plan.

6. Water distribution maps as required in sub. (2) shall be provided to the department.

7. A plan identifying all sample locations for all monitoring required under the safe drinking water act shall be provided to the department.

(b) To obtain authorization for startup of improvements to existing community water systems that are reviewable projects as defined in s. NR 108.02 (13), an inspection of the facilities and correction of deficiencies may be necessary prior to startup as required in par. (a). Water mains are excluded from the inspection requirement unless required in the department plans and specifications approval letter.

(2) MAPS. Each municipal and OTM subdivision supplier of water shall supply a current map of the system which shows the size and location of all facilities and appurtenances, such as water mains, valves, hydrants, wells or sources, pumping stations, treatment plants, and storage facilities. Overflow elevations of the system storage units shall be shown. Any pressure zones shall be delineated. Two current copies of this map shall be kept on file with the department at all times. One copy shall be provided to the department's central office and one copy shall be provided to the appropriate department regional office.

(3) METERS. Each municipal supplier of water and those other-than-municipal water systems having a source capacity of at least 70 gallons per minute shall provide a water meter at each source to accurately measure the daily quantity of water pumped or delivered. Water metering shall be provided for all community water systems utilizing chemical addition. All source water meters shall be calibrated at least every 2 years as required in s. PSC 185.83(2).

(4) LICENSED PUMP INSTALLER. Any person, firm, corporation or partnership performing well pump installing work as defined in s. 280.01 (5), Stats., shall perform the work in accordance with chs. NR 108, 811 and 812 and shall be a licensed pump installer in accordance with the requirements of ch. NR 146. Pump installing work at municipal water systems is not required to be performed by a licensed pump installer when performed by a department certified waterworks operator who is a full-time employee of the municipal water system.

Note: Section 280.01(5), Stats., defines "pump installing" to mean the industry and procedure employed in the placement and preparation for operation of equipment and materials utilized in withdrawing or obtaining water from a well for consumption or use, including all construction involved in making entrance to the well and establishing such seals and safeguards as are necessary to protect such water from contamination.

(5) WELL HEAD PROTECTION PLANS. Communities with a department approved well head protection plan and ordinance shall implement it. Amended plans or ordinances shall be approved by the department prior to implementation

(6) SAMPLING PLANS. Sampling plans shall be developed as required by ch. NR 809.

(7) STORAGE TURNOVER. Storage facilities shall be operated to facilitate turnover of water in order to prevent freezing and stagnant water conditions. Consideration shall be given to installing separate inlet and outlet pipes, diffusers and baffle walls.

(8) EMERGENCY CHLORINATION PLANS. An emergency chlorination plan is required for each community water system. Each municipal system shall have appropriate chlorination infrastructure and chorine available to obtain 0.5 mg/l free chlorine throughout its distribution system within 4 hours. A working chlorine meter shall also be available to measure chlorine concentrations. To ensure systems are capable of emergency chlorination, the department may ask that an emergency chlorination test be conducted by the municipality. At a minimum, the emergency chlorination plan shall include:

(a) Location and description of chlorine pumps, solution containers, chemical, and chlorine test meter.

(b) Procedures for adding chlorine to the system, flushing the system to move chlorine to extremities, and testing chlorine levels.

(c) Example calculations for determining dosage requirements.

SUBCHAPTER II - SURFACE WATER TREATMENT AND GROUNDWATER UNDER THE DIRECT INFLUENCE OF SURFACE WATER TREATMENT OPERATIONS

NR 810.27 General requirements for all surface water and groundwater under the direct influence of surface water systems. (1) This subchapter establishes criteria under which filtration is required as a treatment technique for public water systems supplied by a surface water source or a groundwater source under the direct influence of surface water. Direct influence shall be determined for individual sources by the department. The department determination of direct influence may be based on site-specific measurements of water quality characteristics such as those stated in s. NR 810.02(24) or documentation of well construction characteristics and geology with field evaluation. These regulations also establish requirements for treatment techniques in lieu of maximum contaminant levels for *Giardia lamblia*, viruses, heterotrophic plate count bacteria, *Legionella, Cryptosporidium* and turbidity. Treatment technique requirements apply to every public water system which utilizes surface water or groundwater under the direct influence of surface water and the requirements consist of installing and properly operating water treatment processes which reliably achieve:

(a) At least 99.9% or 3-log removal or inactivation of *Giardia lamblia* cysts between a point where the raw water is not subject to recontamination by surface water runoff and a point downstream before or at the first customer.

(b) At least 99.99% or 4-log removal or inactivation of viruses between a point where the raw water is not subject to recontamination by surface water runoff and a point downstream before or at the first customer.

(c) At least 99.9% or 3-log removal of *Cryptosporidium* between a point where the raw water is not subject to recontamination by surface water runoff and a point downstream before or at the first customer for filtered systems, or *Cryptosporidium* control under the watershed control system for unfiltered GWUDI systems.

(2) A public water system using a surface water source is considered to be in compliance with the requirements of sub. (1) if it meets the filtration requirements in s. NR 810.29 and the disinfection requirements in s. NR 810.31.

(3) A public water system using groundwater under the direct influence of surface water is considered to be in compliance with the requirements or sub. (1) if it meets the criteria for avoiding filtration in s. NR 810.30 along with the disinfection requirements in s. NR 810.31; or if it meets the filtration requirements in s. NR 810.29 and it meets the disinfection requirements in s. NR 810.31.

(4) Each public water system using a surface water source or a groundwater under the direct influence of surface water shall be operated by qualified personnel who meet the requirements specified by the department.

NR 810.28 Requirements for covers on water storage structures. All finished water storage reservoirs and treatment plant basins shall be covered.

NR 810.29 Basic filtration requirements. Public water systems that use a surface water source shall provide filtration which complies with the requirements of sub. (1), (2), (3), (4), or (5) and meets the disinfection criteria for filtered systems specified in s. NR 810.31 (2). Public water systems that use a groundwater source under the direct influence of surface water shall provide filtration which complies with the specifications of sub. (1), (2), (3), (4) or (5) and meets the disinfection criteria for filtered systems specified in s. NR 810.31 within 18 months of the date that a source is determined, by the department, to be under the direct influence of surface water unless they meet the filtration avoidance criteria in s NR 810.30. Failure to meet the applicable requirements of this section is a treatment technique violation.

(1) CONVENTIONAL FILTRATION TREATMENT. (a) For systems using conventional filtration, the turbidity level of representative samples of a system's filtered water shall be less than or equal to 0.3 nephelometric turbidity units (NTU) in at least 95% of the measurements taken each month, measured as specified in s. NR 809.113(1) Tables A and B.

(b) The turbidity level of representative samples of a system's filtered water may not exceed one NTU, measured as specified in s. NR 809.113 (1) Tables A and B.

(c) To determine compliance with par. (a), turbidity measurements shall be performed on representative samples of filtered water at least every 4 hours that the system serves water to the public.

(d) In lieu of the requirements of par. (c), turbidity measurements from a continuous reading and recording turbidity monitoring device shall be recorded at predetermined 4-hour intervals to determine compliance with par. (a). The highest turbidity measurement recorded at any time during the day shall be reported under s. NR 809.80 (9)(a)1.

(e) A system that uses lime softening may acidify representative samples prior to analysis if using an approved protocol.

(2) DIRECT FILTRATION. (a) For systems using direct filtration, the turbidity level of representative samples of a system's filtered water shall be less than or equal to 0.3 NTU in at least 95% of the measurements taken each month, measured as specified in s. NR 809.113 (1), Tables A and B. The department may approve a turbidity limit up to one NTU if the water supplier provides the department with documentation which reliably indicates the system achieves at least 99.9% removal or inactivation of *Giardia lamblia* cysts at a turbidity level above 0.5 NTU at least 95% of the time that the system delivers water to the public.

(b) The turbidity level of representative samples of a system's filtered water may not exceed 1 NTU, measured as specified in s. NR 809.113 (1), Tables A and B.

(3) SLOW SAND FILTRATION. (a) For systems using slow sand filtration, the turbidity level of representative samples of a system's filtered water shall be less than or equal to 1 NTU in at least 95% of the measurements taken each month, measured as specified in s. NR 809.113 (1), Tables A and B.

(b) The turbidity level of representative samples of a system's filtered water may not exceed 5 NTU, measured as specified in s. NR 809.113 (1), Tables A and B.

(4) DIATOMACEOUS EARTH FILTRATION. (a) For systems using diatomaceous earth filtration, the turbidity level of representative samples of a system's filtered water shall be less than or equal to one NTU in at least 95% of the measurements taken each month, measured as specified in s. NR 809.113 (1), Tables A and B.

(b) The turbidity level of representative samples of a system's filtered water may not exceed 5 NTU, measured as specified in s. NR 809.113 (1), Tables A and B.

(5) OTHER FILTRATION TECHNOLOGIES. A public water system may use a filtration technology not listed in subs. (1) to (4) if the system demonstrates to the department, using pilot studies or other means, that the alternative filtration technology, in combination with disinfection treatment that meets the requirements of s. NR 810.31, consistently achieves 99.9% removal or inactivation of *Giardia lamblia* cysts and 99.99% removal or inactivation of viruses, and 99.9% removal of *Cryptosporidium* oocysts, and the department approves the use of the filtration technology. For each approval, the department will set turbidity performance requirements that the system shall meet at least 95% of the time at a level that consistently achieves 99.9% removal or inactivation of *Giardia lamblia* cysts, 99.99% removal or inactivation of viruses, and 99% removal of *Cryptosporidium* oocysts. The department may set other performance requirements to assure the integrity of the technology.

NR 810.295 Filter backwash handling. Public water systems that use a surface water source or groundwater under the direct influence of surface water and that provide filtration shall meet the requirements of s. NR 811.860.

NR 810.30 Criteria for avoiding filtration for groundwater under the direct influence of surface water systems. A public water system that uses groundwater under the direct influence of surface water as a water supply source shall meet all of the conditions of subs. (1) and (2), and is subject to sub. (3), unless the department has determined, in writing, that filtration is required. If the department determines in writing that filtration is required, the system owner shall install filtration and shall meet the criteria for filtered systems specified in ss. NR 810.29 and 810.31(2). Within 18 months of the failure of a public water system using a groundwater source under the direct influence of surface water to meet any one of the requirements of subs. (1) and (2), the system owner shall install filtration and shall meet the criteria for filtered systems specified in ss. NR 810.29 and 810.31(2).

(1) SOURCE WATER QUALITY CONDITIONS. (a) The fecal coliform concentration shall be equal to or less than 20/100ml, or the total coliform concentration shall be equal to or less than 100/100 ml, measured as specified in s. NR 809.311 (1) Table F, in representative samples of the source water immediately prior to the first or only point of disinfectant application in at least 90% of the measurements made for the 6 previous months that the system served water to the public on an ongoing basis. If a system measures both fecal and total coliforms, the fecal coliform criterion, but not the total coliform criterion, in this paragraph shall be met.

(b) The turbidity level may not exceed 5 NTU, measured as specified in s. NR 809.113 (1) Tables A and B, in representative samples of the source water immediately prior to the first or only point of disinfectant application unless both of the following apply:

1. The department determines that a turbidity "event" was caused by circumstances that were unusual and unpredictable. A turbidity "event" is a series of consecutive days during which at least one turbidity measurement each day exceeds 5 NTU.

2. There have not been more than 2 turbidity events in the past 12 months the system served water to the public, or more than 5 turbidity events in the past 120 months the system served water to the public.

(2) SITE-SPECIFIC CONDITIONS. (a) 1. The public water system shall meet the disinfection requirements of s. NR 810.31 (1) (a) at least 11 of the 12 previous months that the system served water to the public, on an ongoing basis, unless the system fails to meet the requirements during 2 of the 12 previous months that the system served water to the public, and the department determines that at least one of these failures was caused by circumstances that were unusual and unpredictable.

2. The public water system shall meet the requirements of s. NR 810.31 (1) (b) at all times the system serves water to the public.

3. The public water system shall meet the requirements of s. NR 810.31 (1) (c) at all times the system serves water to the public unless the department determines that any failure was caused by circumstances that were unusual and unpredictable.

4. The public water system shall meet the requirements of s. NR 810.31 (1) (d) on an ongoing basis unless the department determines that failure to meet these requirements was not caused by a deficiency in treatment of the source water.

(b) The public water system shall maintain a department approved wellhead protection program which minimizes the potential for contamination by *Cryptosporidium, Giardia lamblia* cysts and viruses in the source water. The department shall determine whether the well head protection program is adequate to meet this goal. At a minimum, the program shall do all of the following:

1. Characterize the watershed hydrology, hydrogeology, and land ownership.

2. Identify watershed characteristics and activities which may have an adverse effect on source water quality.

3. Monitor the occurrence of activities which may have an adverse effect on source water quality.

(c) The public water system is subject to an annual on-site inspection to assess the well head protection program and disinfection treatment process. Either the department or a party approved by the department shall conduct the on-site inspection. The inspection shall be conducted by competent individuals and shall include all of the following:

1. A review of the effectiveness of the watershed control program.

2. A review of the physical condition of the source intake and how well it is protected.

3. A review of the system's equipment maintenance program to ensure there is low probability for failure of the disinfection process.

4. An inspection of the disinfection equipment for physical deterioration.

5. A review of operating procedures.

6. A review of data records to ensure that all required tests are being conducted and recorded and disinfection is effectively practiced.

7. Identification of any improvements which are needed in the equipment, system maintenance and operation, or data collection.

8. A review of the adequacy of the watershed control program to limit potential contamination by *Cryptosporidium* including: comprehensiveness of the watershed review, the effectiveness of the system's program to monitor and control detrimental activities occurring in the watershed, and the extent to which the water system has maximized land ownership or controlled land use, or both, within the watershed.

(d) The public water system may not have been identified as a source of a waterborne disease outbreak, or if it has been so identified, the system shall be modified sufficiently to prevent another occurrence, as determined by the department.

(e) The public water system shall comply with the maximum contaminant level (MCL) for total coliforms in s. NR 809.30 at least 11 months of the previous 12 months that the system served water to the public, on an ongoing basis, unless the department determines that failure to meet this requirement was not caused by a deficiency in treatment of the source water.

(f) The system shall comply with the requirements for total trihalomethanes, five haloacetic acids, bromate, chlorite, chlorine, chloramines and chlorine dioxide in s. NR 809.561.

(3) TREATMENT TECHNIQUE VIOLATIONS. (a) A system that fails to meet any one of the criteria in subs. (1) and (2), and for which the department has determined in writing that filtration is required, is in violation of a treatment technique requirement.

(b) A system that has not installed filtration is in violation of a treatment technique if either of the following apply:

1. The turbidity level in a representative sample of the source water immediately prior to the first or only point of disinfection application exceeds 5 NTU.

2. The system is identified as a source of a waterborne disease outbreak.

(4) ADDITIONAL CIRCUMSTANCES WHEN FILTRATION WOULD BE REQUIRED. The department may require a public water system to install filtration even when the system meets the requirements of subs. (1) and (2) if other water quality characteristics or site specific conditions present a threat to public health which could not be eliminated by disinfection alone.

NR 810.31 Disinfection requirements for *Giardia lamblia* and viruses. A system that uses groundwater under the direct influence of surface water and does not provide filtration treatment shall provide disinfection treatment specified in sub. (1) within 18 months after the department determines that the groundwater source is under the influence of surface water. A system that filters and uses surface water or groundwater under the direct influence of surface water as a source shall provide the disinfection treatment specified in sub. (2) when filtration is installed. Failure to meet any requirement of this section is a treatment technique violation.

(1) DISINFECTION REQUIREMENTS FOR PUBLIC WATER SYSTEMS USING GROUNDWATER UNDER THE DIRECT INFLUENCE OF SURFACE WATER THAT DO NOT PROVIDE FILTRATION. (a) The disinfection treatment shall be sufficient to ensure at least 99.9% (3 log) inactivation of *Giardia lamblia* cysts and 99.99% (4 log) inactivation of viruses, every day the system serves water to the public. Each day a system serves water to the public, the water supplier shall calculate the CT value from the system's treatment parameters using the procedure specified in s. NR 810.38(1)(d), and determine whether this value is sufficient to achieve the specified inactivation rates for *Giardia lamblia* cysts and viruses. Systems

using a disinfectant other than chlorine shall demonstrate to the department through on-site challenge studies or other information that the system is achieving required minimum inactivation rates.

(b) The disinfection system shall have either redundant components, including an auxiliary power supply with automatic start-up and alarm to ensure that disinfectant application is maintained continuously while water is being delivered to the distribution system, or automatic shut-off of water delivery to the distribution system whenever there is less than 0.2 mg/l of residual disinfectant concentration in the water. If the department determines that automatic shut-off of delivery of water to the distribution system would cause an unreasonable risk to health or property, the system shall have redundant components.

(c) The residual disinfectant concentration in the water entering the distribution system, measured as specified in s. NR 809.563(2), Table R, may not be less than 0.2 mg/l for more than 4 hours.

(d) 1. The residual disinfectant concentration in the distribution system, measured as total chlorine, combined chlorine, or chlorine dioxide, as specified in s. NR 809.563(2), Table R, may not be undetectable in more than 5% of the samples each month, for any 2 consecutive months that the system serves water to the public. Water in the distribution system with a heterotrophic bacteria concentration less than or equal to 500/ml, measured as heterotrophic plate count (HPC) as specified in s. NR 809.311 (1), Table F, is deemed to have a detectable disinfectant residual for purposes of determining compliance with this requirement. Thus, the value "V" in the following formula cannot exceed 5% in one month for any 2 consecutive months.

$V = c + d + e/a + b \times 100$

where:

a = number of instances where the residual disinfectant concentration is measured

b = number of instances where the residual disinfectant concentration is not measured but heterotrophic bacteria plate count (HPC) is measured

c = number of instances where the residual disinfectant concentration is measured but not detected and no HPC is measured

d = number of instances where no residual disinfectant concentration is detected and where the HPC is > 500/ml

e = number of instances where the residual disinfectant concentration is not measured and HPC is > 500/ml

2. If the department determines, based on site specific considerations, that a system has no means for having a sample transported and analyzed for HPC by a certified laboratory under the requisite time and temperature conditions required in s. NR 809.311 (1), Table F, and that the system is providing adequate disinfection in the distribution system, the requirements of subd. 1. do not apply.

(2) DISINFECTION REQUIREMENTS FOR PUBLIC WATER SYSTEMS WHICH PROVIDE FILTRATION. Each public water system that provides filtration treatment shall provide disinfection treatment as follows:

(a) Disinfection treatment shall be sufficient to ensure that the total treatment processes of that system achieve at least 99.9% (3 log) inactivation or removal of *Giardia lamblia* cysts and at least 99.99% (4 log) inactivation or removal of viruses, as determined by the department.

(b) The residual disinfectant concentration in the water entering the distribution system, measured as specified in s. NR 809.563(2), Table R, may not be less than 0.2 mg/l for more than 4 hours.

(c) 1. The residual disinfectant concentration in the distribution system, measured as total chlorine, combined chlorine or chlorine dioxide, as specified in s. NR 809.563(2), Table R, may not be undetectable in more than 5% of the samples each month, for any 2 consecutive months that the system serves water to the public. Water in the distribution system with a heterotrophic bacteria concentration less than or equal to 500/ml, measured as heterotrophic plate count (HPC) as specified in s. NR 809.311 (1), Table F, is deemed to have a detectable disinfectant residual for purposes of determining compliance with this requirement. Thus, the value "V" in the following formula may not exceed 5% in one month, for any 2 consecutive months.

$V = c + d + e/a + b \times 100$

where:

a = number of instances where the residual disinfectant concentration is measured

b = number of instances where the residual disinfectant concentration is not measured but heterotrophic bacteria plate count (HPC) is measured

c = number of instances where the residual disinfectant concentration is measured but not detected and no HPC is measured

d = number of instances where no residual disinfectant concentration is detected and where the HPC is > 500/ml

e = number of instances where the residual disinfectant concentration is not measured and HPC is > 500/ml

2. If the department determines, based on site specific considerations, that a system has no means for having a sample transported and analyzed for HPC by a certified laboratory under the requisite time and temperature conditions required in s. NR 809.311 (1), Table F, and that the system is providing adequate disinfection in the distribution system, the requirements of subd. 1. do not apply.

NR 810.32 Disinfection profiling and benchmarking. (1) REQUIREMENTS WHEN MAKING A SIGNIFICANT CHANGE IN DISINFECTION PRACTICE. (a) Following the completion of initial source water monitoring under s. NR 809.331, a system that plans to make a significant change to its disinfection practice, as defined in par. (b), shall develop disinfection profiles and calculate disinfection benchmarks for *Giardia lamblia* and viruses as described in sub. (2). Prior to changing the disinfection practice, the system shall notify the department and shall include in this notice all of the following information:

1. A completed disinfection profile and disinfection benchmark for *Giardia lamblia* and viruses as described in sub. (2).
2. A description of the proposed change in disinfection practice.
3. An analysis of how the proposed change will affect the current level of disinfection.

(b) Significant changes to disinfection practice are defined as any of the following:

1. Changes to the point of disinfection.
2. Changes to the disinfectants used in the treatment plant.
3. Changes to the disinfection process.

4. Any other modification identified by the department as a significant change to disinfection practice. Additional barriers with no change to existing disinfection practices may be exempt from these requirements.

(2) DEVELOPING THE DISINFECTION PROFILE AND BENCHMARK. Systems required to develop disinfection profiles under sub. (1) shall follow the requirements of this subsection.

(a) Systems shall monitor at least weekly for a period of 12 consecutive months to determine the total logs of inactivation for *Giardia lamblia* and viruses. If systems monitor more frequently, the monitoring frequency shall be evenly spaced. Systems that operate for fewer than 12 months per year shall monitor weekly during the period of operation. Systems shall determine log inactivation for *Giardia lamblia* through the entire plant, based on the $CT_{99.9}$ (3 log) values in ss. NR 810.47 to 810.62. Systems shall determine log inactivation for viruses through the entire treatment plant based on a protocol approved by the department.

(b) Systems with a single point of disinfectant application prior to entrance to the distribution system shall conduct the monitoring in subds. 1. to 4. Systems with more than one point of disinfectant application shall conduct the monitoring in subds. 1. to 4. for each disinfection segment. Systems shall monitor the parameters necessary to determine the total inactivation ratio, using analytical methods in s. NR 809.563(2), Table R.

1. For systems using a disinfectant other than UV, the temperature of the disinfected water shall be measured at each residual disinfectant concentration sampling point during peak hourly flow.

2. For systems using chlorine, the pH of the disinfected water shall be measured at each chlorine residual disinfectant concentration sampling point during peak hourly flow.

3. The disinfectant contact times (“T”) shall be determined during peak hourly flow.

4. The residual disinfectant concentrations (“C”) of the water before or at the first customer and prior to each additional point of disinfection shall be measured during peak hourly flow.

(c) In lieu of conducting new monitoring under par. (b), systems may elect to meet the following requirements:

1. Systems that have at least one year of existing data that are substantially equivalent to data collected under par. (b) may use these data to develop disinfection profiles as specified in this section if the system has neither made a significant change to its treatment practice nor changed sources since the data were collected. Systems may develop disinfection profiles using up to 3 years of existing data.

2. Systems may use disinfection profile or profiles developed previously in lieu of developing a new profile if the system has neither made a significant change to its treatment practice nor changed sources since the profile was developed. Systems that have not developed a virus profile shall develop a virus profile using the same monitoring data on which the *Giardia lamblia* profile is based.

(d) The system shall calculate the total inactivation ratio for *Giardia lamblia* as follows:

1. For systems using only one point of disinfectant application, the system may determine the total inactivation ratio for the disinfection segment based on either of the following methods:

a. Determine one inactivation ratio ($CT_{calc}/CT_{99.9}$) before or at the first customer during peak hourly flow.

b. Determine successive ($CT_{calc}/CT_{99.9}$) values, representing sequential inactivation ratios, between the point of disinfectant application and a point before or at the first customer during peak hourly flow. Under this alternative, the system shall calculate the total inactivation ratio by determining ($CT_{calc}/CT_{99.9}$) for each sequence and then adding the ($CT_{calc}/CT_{99.9}$) values together to determine (Σ ($CT_{calc}/CT_{99.9}$)).

2. Systems using more than one point of disinfectant application before the first customer shall determine the CT value of each disinfection segment immediately prior to the next point of disinfectant application, or for the final segment, before or at the first customer, during peak hourly flow. The ($CT_{calc}/CT_{99.9}$) value of each segment and (Σ ($CT_{calc}/CT_{99.9}$)) shall be calculated using the method in subd. 1.

3. The system shall determine the total logs of inactivation by multiplying the value calculated in subd. 1. or 2. by 3.0.

(e) Systems shall determine the total logs of inactivation for viruses using a protocol approved by the department.

(f) Systems required to calculate a disinfection benchmark shall use the following procedure:

1. For each year of profiling data collected and calculated under this subsection, the system shall determine the lowest mean monthly level of both *Giardia lamblia* and virus inactivation. The system shall determine the mean *Giardia lamblia* and virus inactivation for each calendar month for each year of profiling data by dividing the sum of daily or weekly *Giardia lamblia* and virus log inactivation by the number of values calculated for that month.

2. The disinfection benchmark is the lowest monthly mean value, for systems with one year of profiling data, or the mean of lowest monthly mean values, for systems with more than one year of profiling data, of the monthly logs of *Giardia lamblia* and virus log inactivation in each year of profiling data.

NR 810.33 Enhanced treatment requirements for *Cryptosporidium*. (1) APPLICABILITY. The requirements of this section apply to all public water systems supplied by a surface water source and public water systems supplied by a groundwater source under the direct influence of surface water.

(a) Wholesale systems shall comply with the requirements of this section based on the population of the largest system in the combined distribution system.

(b) The requirements of this section for filtered systems apply to systems required by this chapter and chs. NR 809 and 811 to provide filtration treatment, whether or not the system is currently operating a filtration system.

(c) The requirements of this section for unfiltered groundwater systems under the direct influence of surface water apply only to unfiltered systems that timely met and continue to meet the filtration avoidance criteria in s. NR 810.30.

(2) REQUIREMENTS. Systems shall comply with the following requirements:

(a) Systems shall conduct an initial and a second round of source water monitoring for each plant that treats a surface water or GWUDI source. This monitoring may include sampling for *Cryptosporidium*, E. coli, and turbidity as described in s. NR 809.331, to determine what level, if any, of additional *Cryptosporidium* treatment they shall provide.

(b) Systems that plan to make a significant change to their disinfection practice shall develop disinfection profiles and calculate disinfection benchmarks, as described in s. NR 810.32.

(c) Filtered systems shall determine their *Cryptosporidium* treatment bin classification as described in s. NR 810.34 and provide additional treatment for *Cryptosporidium*, if required, as described in s. NR 810.35. All unfiltered GWUDI systems shall provide treatment for *Cryptosporidium* as described in s. NR 810.36. Filtered systems and unfiltered GWUDI systems shall implement *Cryptosporidium* treatment according to the schedule in s. NR 810.37.

(d) Systems with uncovered finished water storage facilities shall comply with the requirements to cover the facility as described in s. NR 810.28.

(e) Systems required to provide additional treatment for *Cryptosporidium* shall implement microbial toolbox options that are designed and operated as described in ss. NR 810.41 to 810.45.

(f) Systems shall comply with the applicable recordkeeping and reporting requirements described in ss. NR 810.39 and 810.40.

NR 810.34 *Cryptosporidium* bin classification for filtered systems. (1) Following completion of the initial round of source water monitoring required under s. NR 809.331(1), filtered systems shall calculate an initial *Cryptosporidium* bin concentration for each plant for which monitoring was required. Calculation of the bin concentration shall use the *Cryptosporidium* results reported under s. NR 809.331(1) and shall follow the procedures in sub. (2)(a) to (e).

(2) (a) For systems that collect a total of at least 48 samples, the bin concentration is equal to the arithmetic mean of all sample concentrations.

(b) For systems that collect a total of at least 24 samples, but not more than 47 samples, the bin concentration is equal to the highest arithmetic mean of all sample concentrations in any 12 consecutive months during which *Cryptosporidium* samples were collected.

(c) For systems that serve fewer than 10,000 people and monitor for *Cryptosporidium* for only one year, i.e., collect 24 samples in 12 months, the bin concentration is equal to the arithmetic mean of all sample concentrations.

(d) For systems with plants operating only part of the year that monitor fewer than 12 months per year under s. NR 809.331(5), the bin concentration is equal to the highest arithmetic mean of all sample concentrations during any year of *Cryptosporidium* monitoring.

(e) If the monthly *Cryptosporidium* sampling frequency varies, systems shall first calculate a monthly average for each month of monitoring. Systems shall then use these monthly average concentrations, rather than individual sample concentrations, in the applicable calculation for bin classification in pars. (a) to (d).

(3) Filtered systems shall determine their initial bin classification from the following table and using the *Cryptosporidium* bin concentration calculated under subs. (1) and (2):

Bin Classification Table for Filtered Systems

For systems that are:	With a *Cryptosporidium* bin concentration of [1]	The bin classification is
Required to monitor for *Cryptosporidium* under s. NR 809.331	*Cryptosporidium* <0.075 oocyst/L	Bin 1.
	0.075 oocysts/L ≤ *Cryptosporidium* <1.0 oocysts/L	Bin 2.
	1.0 oocysts/L ≤ *Cryptosporidium* <3.0 oocysts/L	Bin 3.
	Cryptosporidium ≥3.0 oocysts/L	Bin 4.
Serving fewer than 10,000 people and NOT required to monitor for *Cryptosporidium* under s. NR 809.331(1)(d)	NA	Bin 1.

[1]Based on calculations in sub. (1) or (4), as applicable.

(4) Following completion of the second round of source water monitoring required under s. NR 809.331(2), filtered systems shall recalculate their *Cryptosporidium* bin concentration using the *Cryptosporidium* results reported under s. NR 809.331(2) and following the procedures in sub. (2)(a) to (d). Systems shall then redetermine their bin classification using this bin concentration and the table in sub. (3).

(5) Systems shall report their bin classification as follows:

(a) Filtered systems shall report their initial bin classification under par. (c) to the department for approval no later than 6 months after the system is required to complete initial source water monitoring based on the schedule in s. NR 809.331(3).

(b) Systems shall report their bin classification under sub. (4) to the department for approval no later than 6 months after the system is required to complete the second round of source water monitoring based on the schedule in s. NR 809.331(3).

(c) The bin classification report to the department shall include a summary of source water monitoring data and the calculation procedure used to determine bin classification.

(6) Failure to comply with the conditions of sub. (5) is a violation of the treatment technique requirement.

NR 810.35 *Cryptosporidium* treatment requirements for filtered systems. (1) Filtered systems shall provide the level of additional treatment for *Cryptosporidium*

specified in this paragraph based on their bin classification as determined under s. NR 810.34 and according to the schedule in s. NR 810.37.

If the system bin classification is:	And the system uses the following filtration treatment in full compliance with ss. NR 810.29 (as applicable), then the additional *Cryptosporidium* treatment requirements are:			
	Conventional filtration treatment (including softening)	Direct filtration	Slow sand or diatomaceous earth filtration	Alternative filtration technologies including membrane filtration
Bin 1	No additional treatment	No additional treatment	No additional treatment	No additional treatment.
Bin 2	1-log treatment	1.5-log treatment	1-log treatment	As determined by the department such that the total *Cryptosporidium* removal and inactivation is at least 4.0-log.
Bin 3	2-log treatment	2.5-log treatment	2-log treatment	As determined by the department such that the total *Cryptosporidium* removal and inactivation is at least 5.0-log.
Bin 4	2.5-log treatment	3-log treatment	2.5-log treatment	As determined by the department such that the total *Cryptosporidium* removal and inactivation is at least 5.5-log.

(2) Systems shall use the following treatment or management practices:

(a) Filtered systems shall use one or more of the treatment and management options listed in s. NR 810.41, termed the microbial toolbox, to comply with the additional *Cryptosporidium* treatment required in sub. (1).

(b) Systems classified in Bin 3 and Bin 4 shall achieve at least 1-log of the additional *Cryptosporidium* treatment required under sub. (1) using either one or a combination of the following: bag filters, bank filtration, cartridge filters, chlorine dioxide, membranes, ozone, or UV, as described in ss. NR 810.42 to 810.46.

(3) Failure by a system in any month to achieve treatment credit by meeting criteria in ss. NR 810.41 to 810.46 for microbial toolbox options that is at least equal to the level of treatment required in sub. (1) is a violation of the treatment technique requirement.

(4) If the department determines during a sanitary survey or an equivalent source water assessment that after a system completed the monitoring conducted under s. NR 809.331(1) or 809.331(2), significant changes occurred in the system's watershed that could lead to increased contamination of the source water by *Cryptosporidium*, the system shall take actions specified by the department to address the contamination. These actions may include additional source water monitoring or implementing microbial toolbox options listed in s. NR 810.41, or both.

NR 810.36 *Cryptosporidium* treatment requirements for groundwater under the direct influence of surface water systems that do not filter. Section NR 811.42 requires filtration for all surface water sources. The following applies only to GWUDI systems not required to filter.

(1) DETERMINATION OF MEAN *CRYPTOSPORIDIUM* LEVEL. (a) Following completion of the initial source water monitoring required under s. NR 809.331(1), unfiltered systems shall calculate the arithmetic mean of all *Cryptosporidium* sample concentrations reported under s. NR 809.331(1). Systems shall report this value to the department for approval no later than 6 months after the month the system is required to complete initial source water monitoring based on the schedule in s. NR 809.331(3).

(b) Following completion of the second round of source water monitoring required under s. NR 809.331(2), unfiltered systems shall calculate the arithmetic mean of all *Cryptosporidium* sample concentrations reported under s. NR 809.331(2). Systems shall report this value to the department for approval no later than 6 months after the month the system is required to complete the second round of source water monitoring based on the schedule in s. NR 809.331(3).

(c) If the monthly *Cryptosporidium* sampling frequency varies, systems shall first calculate a monthly average for each month of monitoring. Systems shall then use these monthly average concentrations, rather than individual sample concentrations, in the calculation of the mean *Cryptosporidium* level in par. (a) or (b).

(d) The report to the department of the mean *Cryptosporidium* levels calculated under pars. (a) and (b) shall include a summary of the source water monitoring data used for the calculation.

(e) Failure to comply with the conditions of this subsection is a violation of the treatment technique requirement.

(2) *CRYPTOSPORIDIUM* INACTIVATION REQUIREMENTS. Unfiltered systems shall provide the level of inactivation for *Cryptosporidium* specified in this subsection, based on their

mean *Cryptosporidium* levels as determined under sub. (1) and according to the schedule in s. NR 810.37.

(a) Unfiltered systems with a mean *Cryptosporidium* level of 0.01 oocysts/L or less shall provide at least 2-log *Cryptosporidium* inactivation.

(b) Unfiltered systems with a mean *Cryptosporidium* level of greater than 0.01 oocysts/L shall provide at least 3-log *Cryptosporidium* inactivation.

(3) INACTIVATION TREATMENT TECHNOLOGY REQUIREMENTS. Unfiltered systems shall use chlorine dioxide, ozone, or UV as described in s. NR 810.46 to meet the *Cryptosporidium* inactivation requirements of this section.

(a) Systems that use chlorine dioxide or ozone and fail to achieve the *Cryptosporidium* inactivation required in sub. (2) on more than one day in the calendar month are in violation of the treatment technique requirement.

(b) Systems that use UV light and fail to achieve the *Cryptosporidium* inactivation required in sub. (2) by meeting the criteria in s. NR 810.46 are in violation of the treatment technique requirement.

(4) USE OF TWO DISINFECTANTS. Unfiltered systems shall use a minimum of 2 disinfectants to meet the combined *Cryptosporidium* inactivation requirements of this section along with the *Giardia lamblia* and virus inactivation requirements of s. NR 810.31(1). Each of the 2 disinfectants shall separately achieve the total inactivation required for either *Cryptosporidium*, *Giardia lamblia*, or viruses.

NR 810.37 *Cryptosporidium* treatment requirement compliance schedule. (1) Following initial bin classification under s. NR 810.34(3), filtered systems shall provide the level of treatment for *Cryptosporidium* required under s. NR 810.35 according to the schedule in sub. (3).

(2) Following initial determination of the mean *Cryptosporidium* level under s. NR 810.36(1)(a), unfiltered systems shall provide the level of treatment for *Cryptosporidium* required under s. NR 810.36 according to the schedule in sub. (3).

(3) *Cryptosporidium* treatment compliance dates.

Cryptosporidium Treatment Compliance Dates Table

Systems that serve . . .	Shall comply with *Cryptosporidium* treatment requirements no later than . . .[a]
(1) At least 100,000 people	April 1, 2012.
(2) From 50,000 to 99,999 people	October 1, 2012.
(3) From 10,000 to 49,999 people	October 1, 2013.

(4) Fewer than 10,000 people	October 1, 2014.

[a]The department may allow up to an additional 2 years for complying with the treatment requirement for systems making capital improvements.

(4) If the bin classification for a filtered system changes following the second round of source water monitoring, as determined under s. NR 810.34, the system shall provide the level of treatment for *Cryptosporidium* required under s. NR 810.35 on a schedule approved by the department.

(5) If the mean *Cryptosporidium* level for an unfiltered GWUDI system changes following the second round of monitoring, as determined under s. NR 810.36, and if the system is required to provide a different level of *Cryptosporidium* treatment under s. NR 810.36 due to this change, the system shall meet this treatment requirement on a schedule approved by the department.

NR 810.38 Monitoring requirements. (1) MONITORING REQUIREMENTS FOR GROUNDWATER SYSTEMS UNDER THE DIRECT INFLUENCE OF SURFACE WATER THAT DO NOT PROVIDE FILTRATION. A public water system that uses a groundwater source under the direct influence of surface water and does not provide filtration treatment shall begin monitoring as specified in sub. (1) on December 31, 1990, or 6 months after the department determines that the groundwater source is under the direct influence of surface water, whichever is later.

(a) Fecal coliform or total coliform density measurements as required by s. NR 810.30 (1) (a) shall be performed on representative source water samples immediately prior to the first or only point of disinfectant application. The system owner or operator shall sample for fecal or total coliforms at the following minimum frequency each week the system serves water to the public:

System Size (persons served)	**Samples/week**
≤500	1
501 to 3,300	2
3,301 to 10,000	3
10,001 to 25,000	4
>25,000	5

(b) The samples in par. (a) shall be taken on separate days. In addition, one fecal or total coliform density measurement shall be performed every day the system serves water to the public and the turbidity of the source water exceeds one NTU. These samples count toward the weekly coliform sampling requirement.

(c) Turbidity measurements as required by s. NR 810.30 (1) (b) shall be performed on representative grab samples of source water immediately prior to the first or only point of disinfectant application every 4 hours, or more frequently, that the system serves water to the public. A public water system may substitute continuous turbidity monitoring for grab sample monitoring if it validates the continuous measurement for accuracy on a regular basis using a protocol approved by the department.

(d) The total inactivation ratio for each day that the system is in operation shall be determined based on the CT values in ss. NR 810.47 to 810.62, as appropriate. The parameters necessary to determine the total inactivation ratio shall be monitored as follows:

1. Temperature of the disinfected water shall be measured at least once per day at each residual disinfectant concentration sampling point.

2. If the system uses chlorine, the pH of the disinfected water shall be measured at least once per day at each chlorine residual disinfectant concentration sampling point.

3. The disinfectant contact time ("T") shall be determined for each day during peak hourly flow.

4. The residual disinfectant concentration ("C") of the water before or at the first customer shall be measured each day during peak hourly flow.

5. If a system uses a disinfectant other than chlorine, the system may demonstrate to the department, through the use of a department approved protocol for on-site disinfection challenge studies or other information satisfactory to the department, that CT values other than those specified in ss. NR 810.54 to 810.62, and other operational parameters, are adequate to demonstrate that the system is achieving the minimum inactivation rates specified in s. NR 810.31 (1) (a).

(e) For any given disinfectant, the total inactivation ratio shall be calculated as follows:

1. If the system uses only one point of disinfectant application, the system owner or operator may determine the total inactivation ratio based on either of the following 2 methods:

a. One inactivation ratio ($CT_{calc}/CT_{99.9}$) is determined before or at the first customer during peak hourly flow and if the ($CT_{calc}/CT_{99.9}$) is greater than or equal to 1.0, the 99.9% *Giardia lamblia* inactivation requirement has been achieved.

b. Successive ($CT_{calc}/CT_{99.9}$) values, representing sequential inactivation ratios, are determined between the point of disinfectant application and a point before or at the first customer during peak hourly flow. Under this alternative, the following method shall be used to calculate the total inactivation ratio:

Determine ($CT_{calc}/CT_{99.9}$) for each sequence,

Add the ($CT_{calc}/CT_{99.9}$) values together $\Sigma(CT_{calc}/CT_{99.9})$

If Σ ($CT_{calc}/CT_{99.9}$) > or = 1.0, the 99.9% *Giardia lamblia* inactivation requirement has been achieved.

2. If the system uses more than one point of disinfectant application before or at the first customer, the system owner or operator shall determine the CT value of each disinfection sequence immediately prior to the next point of disinfectant application during peak flow. The ($CT_{calc}/CT_{99.9}$) value of each sequence and Σ ($CT_{calc}/CT_{99.9}$) shall be calculated using the method in subd. 1. b. to determine if the system is in compliance with s. NR 810.31.

3. Although not required, the total percent inactivation for a system with one or more points of residual disinfectant concentration monitoring may be calculated by solving the following equation:

Percent inactivation = 100 - (100/10), where

z = 3 x summation of ($CT_{calc}/CT_{99.9}$)

(f) The residual disinfectant concentration of the water entering the distribution system shall be monitored continuously, and the lowest value shall be recorded each day, except that if there is a failure in the continuous monitoring equipment, grab sampling every 4 hours may be conducted in lieu of continuous monitoring, but for no more than 5 working days following the failure of the equipment, and systems serving 3,300 or fewer persons may take grab samples in lieu of providing continuous monitoring on an ongoing basis at the following prescribed frequencies:

System Size by Population	**Samples/day**
≤500	1
501 to 1,000	2
1,001 to 2,500	3
2,501 to 3,300	4

(g) The day's samples to meet par. (f) cannot be taken at the same time. The sampling intervals are subject to department review and approval. If at any time the residual disinfectant concentration falls below 0.2 mg/l in a system using grab sampling in lieu of continuous monitoring, the system shall take a grab sample every 4 hours until the residual concentration is equal to or greater than 0.2 mg/l.

(h) The residual disinfectant concentration of the water in the distribution system shall be measured as follows:

1. The residual disinfectant concentration shall be measured at least at the same points in the distribution system and at the same time as total coliforms are sampled, except that the department may allow a public water system which uses a groundwater source, to take disinfectant residual samples at points other than the total coliform sampling points if the department determines that the points are more representative of treated (disinfected) water quality within the distribution system. Heterotrophic bacteria, measured as heterotrophic plate count (HPC) as specified in s. NR 809.311(2), Table F, may be measured in lieu of residual disinfectant concentration, when approved by the department.

2. If the department determines, based on site specific considerations, that a system has no means for having a sample transported and analyzed for HPC by a certified laboratory under the requisite time and temperature conditions specified by s. NR 809.311, Table F, and that the system is providing adequate disinfection in the distribution system, the requirements of subd. 1. do not apply to that system.

(2) MONITORING REQUIREMENTS FOR SYSTEMS USING FILTRATION TREATMENT. A public water system that uses a surface water source or a groundwater source under the direct influence of surface water and provides filtration treatment shall monitor in accordance with this section:

(a) Turbidity measurements as specified in s. NR 810.29 shall be performed on representative samples of the system's combined filter effluent water every 4 hours, or more frequently, that the system serves water to the public. A public water system may substitute continuous turbidity monitoring for grab sample monitoring if it validates the continuous measurement for accuracy on a regular basis using a protocol approved by the department. For any systems using slow sand filtration or filtration treatment other than conventional treatment, direct filtration or diatomaceous earth filtration, the department may reduce the sampling frequency to once per day if it determines that less frequent monitoring is sufficient to indicate effective filtration performance. For systems serving 500 or fewer persons, the department may reduce the turbidity sampling frequency to once per day, regardless of the type of filtration treatment used, if the department determines that less frequent monitoring is sufficient to indicate effective filtration performance.

(b) Systems using conventional or direct filtration shall conduct continuous monitoring of turbidity for each individual filter using a method approved in s. NR 809.113 (1), Tables A and B and shall calibrate turbidimeters using the procedure specified by the manufacturer. Systems shall record the results of individual filter monitoring every 15 minutes. If there is a failure in the continuous monitoring equipment, the system shall conduct grab sampling every 4 hours in lieu of continuous monitoring, until the turbidimeter is repaired and back on-line. The system shall repair the equipment no later than 5 working days after the failure or the system is in violation.

(c) The residual disinfectant concentration of the water entering the distribution system shall be monitored continuously, and the lowest value shall be recorded each day, except that if there is a failure in the continuous monitoring equipment, grab sampling every 4 hours may be conducted in lieu of continuous monitoring, but for no more than 5 working days following the failure of the equipment. Systems serving 3,300 or fewer persons may take grab samples in lieu of providing continuous monitoring on an ongoing basis at the frequencies each day prescribed as follows:

System Size by Population	**Samples/day[1]**
≤500	1
501 to 1,000	2
1,001 to 2,500	3
2,501 to 3,300	4

[1]The day's samples cannot be taken at the same time. The sampling intervals are subject to department review and approval.

If at any time the residual disinfectant concentration falls below 0.2 mg/l in a system using grab sampling in lieu of continuous monitoring, the system shall take a grab sample every 4 hours until the residual disinfectant concentration is equal to or greater than 0.2 mg/l.

(d) The residual disinfectant concentration in the distribution system shall be measured as follows:

1. The residual disinfectant concentration shall be measured at least at the same points in the distribution system and at the same time as total coliforms are sampled. The department may allow a public water system which uses both a surface water source or a groundwater source under direct influence of surface water, and a groundwater source to take disinfectant residual samples at points other than the total coliform sampling points if the department determines that the points are more representative of treated (disinfected) water quality within the distribution system. Heterotrophic bacteria, measured as heterotrophic plate count (HPC) as specified in s. NR 809.311 (1), Table F, may be measured in lieu of residual disinfectant concentration, when approved by the department.

2. If the department determines, based on site specific considerations, that a system has no means for having a sample transported and analyzed for HPC by a certified laboratory under the requisite time and temperature conditions specified in s. NR 809.311 (1), Table F, and that the system is providing adequate disinfection in the distribution system, the requirements of subd. 1. do not apply to that system.

NR 810.39 Reporting requirements. (1) Systems shall report sampling schedules under s. NR 809.332 and source water monitoring results under s. NR 810.336 unless they notify the department that they will not conduct source water monitoring due to meeting the criteria of s. NR 809.331(4).

(2) Filtered systems shall report their *Cryptosporidium* bin classification as described in s. NR 810.34.

(3) Unfiltered GWUDI systems shall report their mean source water *Cryptosporidium* level as described in s. NR 810.36.

(4) Systems shall report disinfection profiles and benchmarks to the department as described in s. NR 810.32 prior to making a significant change in disinfection practice.

(5) Systems shall report to the department in accordance with the following table for any microbial toolbox options used to comply with treatment requirements under s. NR 810.35 or 810.36. Alternatively, the department may approve a system to certify operation within required parameters for treatment credit rather than reporting monthly operational data for toolbox options.

Microbial Toolbox Reporting Requirements

Toolbox option	Systems shall submit the following information	On the following schedule

(1) Watershed control program (WCP)	(a) Notice of intention to develop a new or continue an existing watershed control program	No later than 2 years before the applicable treatment compliance date in s. NR 810.37
	(b) Watershed control plan	No later than one year before the applicable treatment compliance date in s. NR 810.37.
	(c) Annual watershed control program status report	Every 12 months, beginning one year after the applicable treatment compliance date in s. NR 810.37.
	(d) Watershed sanitary survey report	For community water systems, every 3 years beginning 3 years after the applicable treatment compliance date in s. NR 810.37. For noncommunity water systems, every 5 years beginning 5 years after the applicable treatment compliance date in s. NR 810.37.
(2) Alternative source/intake management	Verification that system has relocated the intake or adopted the intake withdrawal procedure reflected in monitoring results	No later than the applicable treatment compliance date in s. NR 810.37.
(3) Presedimentation	Monthly verification of the following: (a) Continuous basin operation (b) Treatment of 100% of the flow (c) Continuous addition of a coagulant (d) At least 0.5-log mean reduction of influent turbidity or compliance with alternative department-approved performance criteria	Monthly reporting within 10 days following the month in which the monitoring was conducted, beginning on the applicable treatment compliance date in s. NR 810.37.

(4) Two-stage lime softening	Monthly verification of the following: (a) Chemical addition and hardness precipitation occurred in 2 separate and sequential softening stages prior to filtration (b) Both stages treated 100% of the plant flow	Monthly reporting within 10 days following the month in which the monitoring was conducted, beginning on the applicable treatment compliance date in s. NR 810.37.
(5) Bank filtration	(a) Initial demonstration of the following: 1. Unconsolidated, predominantly sandy aquifer 2. Setback distance of at least 25 ft. (0.5-log credit) or 50 ft. (1.0-log credit)	No later than the applicable treatment compliance date in s. NR 810.37.
	(b) If monthly average of daily max turbidity is greater than one NTU then system shall report result and submit an assessment of the cause.	Report within 30 days following the month in which the monitoring was conducted, beginning on the applicable treatment compliance date in s. NR 810.37.
(6) Combined filter performance	Monthly verification of combined filter effluent (CFE) turbidity levels less than or equal to 0.15 NTU in at least 95% of the 4 hour CFE measurements taken each month	Monthly reporting within 10 days following the month in which the monitoring was conducted, beginning on the applicable treatment compliance date in s. NR 810.37.
(7) Individual filter performance	Monthly verification of the following: (a) Individual filter effluent (IFE) turbidity levels less than or equal to 0.15 NTU in at least 95% of samples each month in each filter (b) No individual filter greater than 0.3 NTU in 2 consecutive readings 15 minutes apart	Monthly reporting within 10 days following the month in which the monitoring was conducted, beginning on the applicable treatment compliance date in s. NR 810.37.

(8) Demonstration of performance	(a) Results from testing following a department approved protocol (b) As required by the department, monthly verification of operation within conditions of department approval for demonstration of performance credit	(a) No later than the applicable treatment compliance date in s. NR 810.37. (b) Within 10 days following the month in which monitoring was conducted, beginning on the applicable treatment compliance date in s. NR 810.37.
(9) Bag filters and cartridge filters	(a) Demonstration that the following criteria are met: 1. Process meets the definition of bag or cartridge filtration; 2. Removal efficiency established through challenge testing that meets criteria in this chapter	No later than the applicable treatment compliance date in s. NR 810.37.
	(b) Monthly verification that 100% of plant flow was filtered	Within 10 days following the month in which monitoring was conducted, beginning on the applicable treatment compliance date in s. NR 810.37.
(10) Membrane filtration	(a) Results of verification testing demonstrating the following: 1. Removal efficiency established through challenge testing that meets criteria in this chapter; 2. Integrity test method and parameters, including resolution, sensitivity, test frequency, control limits, and associated baseline	No later than the applicable treatment compliance date in s. NR 810.37.

	(b) Monthly report summarizing the following: 1. All direct integrity tests above the control limit; 2. If applicable, any turbidity or alternative department-approved indirect integrity monitoring results triggering direct integrity testing and the corrective action that was taken	Within 10 days following the month in which monitoring was conducted, beginning on the applicable treatment compliance date in s. NR 810.37.
(11) Second stage filtration	Monthly verification that 100% of flow was filtered through both stages and that first stage was preceded by coagulation step	Within 10 days following the month in which monitoring was conducted, beginning on the applicable treatment compliance date in s. NR 810.37.
(12) Slow sand filtration (as secondary filter)	Monthly verification that both a slow sand filter and a preceding separate stage of filtration treated 100% of flow from surface water sources.	Within 10 days following the month in which monitoring was conducted, beginning on the applicable treatment compliance date in s. NR 810.37.
(13) Chlorine dioxide	Summary of CT values for each day as described in s. NR 810.46.	Within 10 days following the month in which monitoring was conducted, beginning on the applicable treatment compliance date in s. NR 810.37.
(14) Ozone	Summary of CT values for each day as described in s. NR 810.46.	Within 10 days following the month in which monitoring was conducted, beginning on the applicable treatment compliance date in s. NR 810.37.

(15) UV	(a) Validation test results demonstrating operating conditions that achieve required UV dose.	No later than the applicable treatment compliance date in s. NR 810.37.
	(b) Monthly report summarizing the percentage of water entering the distribution system that was not treated by UV reactors operating within validated conditions for the required dose as specified in s. NR 810.46	Within 10 days following the month in which monitoring was conducted, beginning on the applicable treatment compliance date in s. NR 810.37.

NR 810.40 Recordkeeping requirements. (1) Systems shall keep results from the initial round of source water monitoring under s. NR 809.331(1) and the second round of source water monitoring under s. NR 809.331(2) until 3 years after bin classification under s. NR 810.34 for filtered systems or determination of the mean *Cryptosporidium* level under s. NR 810.35 for unfiltered GWUDI systems for the particular round of monitoring.

(2) Systems shall keep any notification to the department that they will not conduct source water monitoring due to meeting the criteria of s. NR 809.331(4) for 3 years.

(3) Systems shall keep the results of treatment monitoring associated with microbial toolbox options under ss. NR 810.42 to 810.46 for 3 years.

SUBCHAPTER III – TOOLBOX OPTIONS FOR MEETING ENHANCED TREATMENT FOR *CRYPTOSPORIDIUM* REQUIREMENTS

NR 810.41 Microbial toolbox options. (1) (a) Systems receive the treatment credits listed in the table in sub. (2) by meeting the conditions for microbial toolbox options described in ss. NR 810.42 to NR 810.46. Systems apply these treatment credits to meet the treatment requirements in s. NR 810.35 or 810.36, as applicable.

(b) Unfiltered GWUDI systems are eligible for treatment credits for the microbial toolbox options described in s. NR 810.46 only.

(2) The following table summarizes options in the microbial toolbox:

Microbial Toolbox Summary Table: Options, Treatment Credits and Criteria

Toolbox Option	*Cryptosporidium* treatment credit with design and implementation criteria
Source Protection and Management Toolbox Options	

(1) Watershed control program	0.5-log credit for department-approved program comprising required elements, annual program status report to department, and regular watershed survey. Unfiltered systems are not eligible for credit. Specific criteria are in s. NR 810.42(1).
(2) Alternative source/intake management	No prescribed credit. Systems may conduct simultaneous monitoring for treatment bin classification at alternative intake locations or under alternative intake management strategies. Specific criteria are in s. NR 810.42(2).

Pre Filtration Toolbox Options	
(3) Presedimentation basin with coagulation	0.5-log credit during any month that presedimentation basins achieve a monthly mean reduction of 0.5-log or greater in turbidity or alternative department-approved performance criteria. To be eligible, basins shall be operated continuously with coagulant addition and all plant flow shall pass through basins. Specific criteria are in s. NR 810.43(1).
(4) Two-stage lime softening	0.5-log credit for 2-stage softening where chemical addition and hardness precipitation occur in both stages. All plant flow shall pass through both stages. Single-stage softening is credited as equivalent to conventional treatment. Specific criteria are in s. NR 810.43(2).
(5) Bank filtration	0.5-log credit for 25-foot setback; 1.0-log credit for 50-foot setback; aquifer shall be unconsolidated sand containing at least 10% fines; average turbidity in wells shall be less than one NTU. Systems using wells followed by filtration when conducting source water monitoring shall sample the well to determine bin classification and are not eligible for additional credit. Specific criteria are in s. NR 810.43(3).
Treatment Performance Toolbox Options	
(6) Combined filter performance	0.5-log credit for combined filter effluent turbidity less than or equal to 0.15 NTU in at least 95% of measurements each month. Specific criteria are in s. NR 810.44(1).

(7) Individual filter performance	0.5-log credit, in addition to 0.5-log combined filter performance credit, if individual filter effluent turbidity is less than or equal to 0.15 NTU in at least 95% of samples each month in each filter and is never greater than 0.3 NTU in 2 consecutive measurements in any filter. Specific criteria are in s. NR 810.44(2).
(8) Demonstration of performance	Credit awarded to unit process or treatment train based on a demonstration to the department with a department-approved protocol. Specific criteria are in s. NR 810.44(3).
Additional Filtration Toolbox Options	
(9) Bag or cartridge filters (individual filters)	Up to 2-log credit based on the removal efficiency demonstrated during challenge testing with a 1.0-log factor of safety. Specific criteria are in s. NR 810.45(1).
(10) Bag or cartridge filters (in series)	Up to 2.5-log credit based on the removal efficiency demonstrated during challenge testing with a 0.5-log factor of safety. Specific criteria are in s. NR 810.45(1).
(11) Membrane filtration	Log credit equivalent to removal efficiency demonstrated in challenge test for device if supported by direct integrity testing. Specific criteria are in s. NR 810.45(2).
(12) Second stage filtration	0.5-log credit for second separate granular media filtration stage if treatment train includes coagulation prior to first filter. Specific criteria are in s. NR 810.45(3)
(13) Slow sand filters	2.5-log credit as a secondary filtration step; 3.0-log credit as a primary filtration process. No prior chlorination for either option. Specific criteria are in s. NR 810.45(4).
Inactivation Toolbox Options	
(14) Chlorine dioxide	Log credit based on measured CT in relation to CT table. Specific criteria are in s. NR 810.46(2)

(15) Ozone	Log credit based on measured CT in relation to CT table. Specific criteria are in s. NR 810.46(2).
(16) UV	Log credit based on validated UV dose in relation to UV dose table; reactor validation testing required to establish UV dose and associated operating conditions. Specific criteria are in s. NR 810.46(4).

NR 810.42 Source toolbox components. (1) WATERSHED CONTROL PROGRAM. Systems receive 0.5-log *Cryptosporidium* treatment credit for implementing a watershed control program that meets the requirements of this section.

(a) Systems that intend to apply for the watershed control program credit shall notify the department of this intent no later than 2 years prior to the treatment compliance date applicable to the system in s. NR 810.37.

(b) Systems shall submit to the department a proposed watershed control plan no later than one year before the applicable treatment compliance date in s. NR 810.37. The department shall approve the watershed control plan for the system to receive watershed control program treatment credit. The watershed control plan shall include the following elements:

1. Identification of an "area of influence" outside of which the likelihood of *Cryptosporidium* or fecal contamination affecting the treatment plant intake is not significant. This is the area to be evaluated in future watershed surveys under subd. 2.

2. Identification of both potential and actual sources of *Cryptosporidium* contamination and an assessment of the relative impact of these sources on the system's source water quality.

3. An analysis of the effectiveness and feasibility of control measures that could reduce *Cryptosporidium* loading from sources of contamination to the system's source water.

4. A statement of goals and specific actions the system will undertake to reduce source water *Cryptosporidium* levels. The plan shall explain how the actions are expected to contribute to specific goals, identify watershed partners and their roles, identify resource requirements and commitments, and include a schedule for plan implementation with deadlines for completing specific actions identified in the plan.

(c) Systems with existing watershed control programs, i.e., programs in place on January 5, 2006, are eligible to seek this credit. The watershed control plans shall meet the criteria in par. (b) and shall specify ongoing and future actions that will reduce source water *Cryptosporidium* levels.

(d) If the department does not respond to a system regarding approval of a watershed control plan submitted under this section and the system meets the other requirements of this section, the watershed control program will be considered approved and 0.5 log *Cryptosporidium* treatment credit will be awarded unless and until the department subsequently withdraws the approval.

(e) Systems shall complete the following actions to maintain the 0.5-log credit:

1. Submit an annual watershed control program status report to the department. The annual watershed control program status report shall describe the system's implementation of the approved plan and assess the adequacy of the plan to meet its goals. The status report shall explain how the system is addressing any shortcomings in plan implementation, including those previously identified by the department or as the result of the watershed survey conducted under subd. 2. It shall also describe any significant changes that have occurred in the watershed since the last watershed sanitary survey. If a system determines during implementation that making a significant change to its approved watershed control program is necessary, the system shall notify the department prior to making any changes. If any change is likely to reduce the level of source water protection, the system shall also list in its notification the actions the system will take to mitigate this effect.

2. Undergo a watershed sanitary survey every 3 years for community water systems and every 5 years for noncommunity water systems and submit the survey report to the department. The survey shall be conducted according to department guidelines and by persons the department approves.

a. The watershed sanitary survey shall meet the following criteria: encompass the region identified in the department-approved watershed control plan as the area of influence; assess the implementation of actions to reduce source water *Cryptosporidium* levels; and identify any significant new sources of *Cryptosporidium*.

b. If the department determines that significant changes may have occurred in the watershed since the previous watershed sanitary survey, systems shall undergo another watershed sanitary survey by a date the department requires, which may be earlier than the regular date in this subdivision.

3. The system shall make the watershed control plan, annual status reports, and watershed sanitary survey reports available to the public upon request. These documents shall be in a plain language style and include criteria by which to evaluate the success of the program in achieving plan goals.

(f) If the department determines that a system is not complying with the approved watershed control plan, the department may withdraw the watershed control program treatment credit.

(2) ALTERNATIVE SOURCE. (a) A system may conduct source water monitoring that reflects a different intake location, either in the same source or for an alternate source, or a different procedure for the timing or level of withdrawal from the source (alternative source monitoring). If the department approves, a system may determine its bin classification under s. NR 810.34 based on the alternative source monitoring results.

(b) If systems conduct alternative source monitoring under this subsection, systems shall also monitor their current plant intake concurrently as described in s. NR 809.331.

(c) Alternative source monitoring under par. (a) shall meet the requirements for source monitoring to determine bin classification, as described in ss. NR 809.331 to 809.336. Systems shall report the alternative source monitoring results to the department, along with supporting information documenting the operating conditions under which the samples were collected.

(d) If a system determines its bin classification under s. NR 810.34 using alternative source monitoring results that reflect a different intake location or a different procedure for managing the timing or level of withdrawal from the source, the system shall relocate

the intake or permanently adopt the withdrawal procedure, as applicable, no later than the applicable treatment compliance date in s. NR 810.37.

NR 810.43 Pre-filtration treatment toolbox components. (1) PRESEDIMENTATION. Systems receive 0.5-log *Cryptosporidium* treatment credit for a presedimentation basin during any month the process meets the criteria in this subsection.

(a) The presedimentation basin shall be in continuous operation and shall treat the entire plant flow taken from a surface water or GWUDI source.

(b) The system shall continuously add a coagulant to the presedimentation basin.

(c) The presedimentation basin shall achieve the following performance criteria:

1. Demonstrates at least 0.5-log mean reduction of influent turbidity. This reduction shall be determined using daily turbidity measurements in the presedimentation process influent and effluent and shall be calculated as follows: $\log_{10}$(monthly mean of daily influent turbidity)−$\log_{10}$(monthly mean of daily effluent turbidity).

2. Complies with department-approved performance criteria that demonstrate at least 0.5-log mean removal of micron-sized particulate material through the presedimentation process.

(2) TWO-STAGE LIME SOFTENING. Systems receive an additional 0.5-log *Cryptosporidium* treatment credit for a 2-stage lime softening plant if chemical addition and hardness precipitation occur in 2 separate and sequential softening stages prior to filtration. Both softening stages shall treat the entire plant flow taken from a surface water or GWUDI source.

(3) BANK FILTRATION. Systems receive *Cryptosporidium* treatment credit for bank filtration that serves as pretreatment to a filtration plant by meeting the criteria in this subsection. Systems using bank filtration when they begin source water monitoring under s. NR 809.331(1) shall collect samples as described in s. NR 809.333(4) and are not eligible for this credit.

(a) Wells with a groundwater flow path of at least 25 feet receive 0.5-log treatment credit; wells with a groundwater flow path of at least 50 feet receive 1.0-log treatment credit. The groundwater flow path shall be determined as specified in par. (d).

(b) Only wells in granular aquifers are eligible for treatment credit. Granular aquifers are those comprised of sand, clay, silt, rock fragments, pebbles or larger particles, and minor cement. A system shall characterize the aquifer at the well site to determine aquifer properties. Systems shall extract a core from the aquifer and demonstrate that in at least 90% of the core length, grains less than 1.0 mm in diameter constitute at least 10% of the core material.

(c) Only horizontal and vertical wells are eligible for treatment credit.

(d) For vertical wells, the groundwater flow path is the measured distance from the edge of the surface water body under high flow conditions, determined by the 100-year floodplain elevation boundary or by the floodway, as defined in Federal Emergency Management Agency flood hazard maps, to the well screen. For horizontal wells, the groundwater flow path is the measured distance from the bed of the river under normal flow conditions to the closest horizontal well lateral screen.

(e) Systems shall monitor each wellhead for turbidity at least once every 4 hours while the bank filtration process is in operation. If monthly average turbidity levels, based on daily maximum values in the well, exceed one NTU, the system shall report this result to the department and conduct an assessment within 30 days to determine the cause of the

high turbidity levels in the well. If the department determines that microbial removal has been compromised, the department may revoke treatment credit until the system implements corrective actions approved by the department to remediate the problem.

(f) Springs and infiltration galleries are not eligible for treatment credit under this section, but are eligible for credit under s. NR 810.44(3).

(g) The department may approve *Cryptosporidium* treatment credit for bank filtration based on a demonstration of performance study that meets the criteria in this paragraph. This treatment credit may be greater than 1.0-log and may be awarded to bank filtration that does not meet the criteria in pars. (a) to (e).

1. The study shall follow a department-approved protocol and shall involve the collection of data on the removal of *Cryptosporidium* or a surrogate for *Cryptosporidium* and related hydrogeologic and water quality parameters during the full range of operating conditions.

2. The study shall include sampling both from the production well or wells and from monitoring wells that are screened and located along the shortest flow path between the surface water source and the production well or wells.

NR 810.44 Treatment performance toolbox components. (1) COMBINED FILTER PERFORMANCE. Systems using conventional filtration treatment or direct filtration treatment receive an additional 0.5-log *Cryptosporidium* treatment credit during any month the system meets the criteria in this subsection. Combined filter effluent (CFE) turbidity shall be less than or equal to 0.15 NTU in at least 95% of the measurements. Turbidity shall be measured as described in s. NR 809.113(1), Tables A and B.

(2) INDIVIDUAL FILTER PERFORMANCE. Systems using conventional filtration treatment or direct filtration treatment receive 0.5-log *Cryptosporidium* treatment credit, which may be in addition to the 0.5-log credit under sub. (1), during any month the system meets the criteria in this subsection. Compliance with these criteria shall be based on individual filter turbidity monitoring as described in s. NR 809.113(1) Tables A and B, as applicable.

(a) The filtered water turbidity for each individual filter shall be less than or equal to 0.15 NTU in at least 95% of the measurements recorded each month.

(b) No individual filter may have a measured turbidity greater than 0.3 NTU in 2 consecutive measurements taken 15 minutes apart.

(c) Any system that has received treatment credit for individual filter performance and fails to meet the requirements of par. (a) or (b) during any month does not receive a treatment technique violation under s. NR 810.35(3) if the department determines the following:

1. The failure was due to unusual and short-term circumstances that could not reasonably be prevented through optimizing treatment plant design, operation, and maintenance.

2. The system has experienced no more than 2 such failures in any calendar year.

(3) DEMONSTRATION OF PERFORMANCE. The department may approve *Cryptosporidium* treatment credit for drinking water treatment processes based on a demonstration of performance study that meets the criteria in this subsection. This treatment credit may be greater than or less than the prescribed treatment credits in s. NR 810.35 or ss. NR 810.43 to 810.46 and may be awarded to treatment processes that do not meet the criteria for the prescribed credits.

(a) Systems cannot receive the prescribed treatment credit for any toolbox box option in ss. NR 810.43 to 810.46 if that toolbox option is included in a demonstration of performance study for which treatment credit is awarded under this subsection.

(b) The demonstration of performance study shall follow a department-approved protocol and shall demonstrate the level of *Cryptosporidium* reduction the treatment process will achieve under the full range of expected operating conditions for the system.

(c) Approval by the department shall be in writing and may include monitoring and treatment performance criteria that the system shall demonstrate and report on an ongoing basis to remain eligible for the treatment credit. The department may designate the criteria where necessary to verify that the conditions under which the demonstration of performance credit was approved are maintained during routine operation.

NR 810.45 Additional filtration toolbox components. (1) BAG OR CARTRIDGE FILTERS. Systems receive *Cryptosporidium* treatment credit of up to 2.0-log for individual bag or cartridge filters and up to 2.5-log for bag or cartridge filters operated in series by meeting the criteria in pars. (a) to (j). To be eligible for this credit, systems shall report the results of challenge testing that meets the requirements of pars. (b) to (i) to the department. The filters shall treat the entire plant flow taken from a surface water or GWUDI source.

(a) The *Cryptosporidium* treatment credit awarded to bag or cartridge filters shall be based on the removal efficiency demonstrated during challenge testing that is conducted according to the criteria in pars. (b) to (i). A factor of safety equal to 1-log for individual bag or cartridge filters and 0.5-log for bag or cartridge filters in series shall be applied to challenge testing results to determine removal credit. Systems may use results from challenge testing conducted prior to January 5, 2006 if the prior testing was consistent with the criteria specified in pars. (b) to (i).

(b) Challenge testing shall be performed on full-scale bag or cartridge filters, and the associated filter housing or pressure vessel, that are identical in material and construction to the filters and housings the system will use for removal of *Cryptosporidium*. Bag or cartridge filters shall be challenge tested in the same configuration that the system will use, either as individual filters or as a series configuration of filters.

(c) Challenge testing shall be conducted using *Cryptosporidium* or a surrogate that is removed no more efficiently than *Cryptosporidium*. The microorganism or surrogate used during challenge testing is referred to as the challenge particulate. The concentration of the challenge particulate shall be determined using a method capable of discreetly quantifying the specific microorganism or surrogate used in the test; gross measurements such as turbidity may not be used.

(d) The maximum feed water concentration that can be used during a challenge test shall be based on the detection limit of the challenge particulate in the filtrate, i.e., filtrate detection limit, and shall be calculated using the following equation:

$$\text{Maximum Feed Concentration} = 1 \times 10^4 \times (\text{Filtrate Detection Limit})$$

(e) Challenge testing shall be conducted at the maximum design flow rate for the filter as specified by the manufacturer.

(f) Each filter evaluated shall be tested for a duration sufficient to reach 100% of the terminal pressure drop, which establishes the maximum pressure drop under which the filter may be used to comply with the requirements of this chapter.

(g) Removal efficiency of a filter shall be determined from the results of the challenge test and expressed in terms of log removal values using the following equation:

$$LRV = LOG_{10}(C_f) - LOG_{10}(C_p)$$

Where:

LRV = log removal value demonstrated during challenge testing; C_f= the feed concentration measured during the challenge test; and C_p= the filtrate concentration measured during the challenge test. In applying this equation, the same units shall be used for the feed and filtrate concentrations. If the challenge particulate is not detected in the filtrate, then the term C_p shall be set equal to the detection limit.

(h) Each filter tested shall be challenged with the challenge particulate during 3 periods over the filtration cycle: within 2 hours of start-up of a new filter; when the pressure drop is between 45% and 55% of the terminal pressure drop; and at the end of the cycle after the pressure drop has reached 100% of the terminal pressure drop. An LRV shall be calculated for each of these challenge periods for each filter tested. The LRV for the filter (LRV_{filter}) shall be assigned the value of the minimum LRV observed during the 3 challenge periods for that filter.

(i) If fewer than 20 filters are tested, the overall removal efficiency for the filter product line shall be set equal to the lowest LRV_{filter} among the filters tested. If 20 or more filters are tested, the overall removal efficiency for the filter product line shall be set equal to the 10th percentile of the set of LRV_{filter} values for the various filters tested. The percentile is defined by (i/(n+1)) where i is the rank of n individual data points ordered lowest to highest. If necessary, the 10th percentile may be calculated using linear interpolation.

(j) If a previously tested filter is modified in a manner that could change the removal efficiency of the filter product line, challenge testing to demonstrate the removal efficiency of the modified filter shall be conducted and submitted to the department.

(2) MEMBRANE FILTRATION. (a) *Definitions*. In this subsection:

1. "Flux" means the throughput of a pressure driven membrane process expressed as flow per unit of membrane area.
2. "Module" means the smallest component of a membrane unit in which a specific membrane surface area is housed in a device with a filtrate outlet structure.
3. "Recovery" means the volumetric percent of feed water that is converted to filtrate over the course of an operating cycle uninterrupted by events such as chemical cleaning or a solids removal process, i.e., backwashing.

(b) *Removal Credit.* Systems receive *Cryptosporidium* treatment credit for membrane filtration that meets the criteria of this paragraph. Membrane cartridge filters that meet the definition of membrane filtration in s. NR 810.02(26) are eligible for this credit. The level of treatment credit a system receives is equal to the lower of the values determined under the following:

1. The removal efficiency demonstrated during challenge testing conducted under the conditions in par. (b).

2. The maximum removal efficiency that can be verified through direct integrity testing used with the membrane filtration process under the conditions in par. (c).

(c) *Challenge testing*. The membrane used by the system shall undergo challenge testing to evaluate removal efficiency, and the system shall report the results of challenge testing to the department. Challenge testing shall be conducted according to the criteria in subds. 1 to 7. Systems may use data from challenge testing conducted prior to January 5, 2006 if the prior testing was consistent with the following criteria:

1. Challenge testing shall be conducted on either a full-scale membrane module, identical in material and construction to the membrane modules used in the system's treatment facility, or a smaller-scale membrane module, identical in material and similar in construction to the full-scale module.

2. Challenge testing shall be conducted using *Cryptosporidium* oocysts or a surrogate that is removed no more efficiently than *Cryptosporidium* oocysts. The organism or surrogate used during challenge testing is referred to as the challenge particulate. The concentration of the challenge particulate, in both the feed and filtrate water, shall be determined using a method capable of discretely quantifying the specific challenge particulate used in the test; gross measurements such as turbidity may not be used.

3. The maximum feed water concentration that may be used during a challenge test is based on the detection limit of the challenge particulate in the filtrate and shall be determined according to the following equation:

$$\text{Maximum Feed Concentration} = 3.16 \times 10^6 \times (\text{Filtrate Detection Limit})$$

4. Challenge testing shall be conducted under representative hydraulic conditions at the maximum design flux and maximum design process recovery specified by the manufacturer for the membrane module.

5. Removal efficiency of a membrane module shall be calculated from the challenge test results and expressed as a log removal value according to the following equation:

$$LRV = LOG_{10}(C_f) - LOG_{10}(C_p)$$

Where:

LRV = log removal value demonstrated during the challenge test; C_f = the feed concentration measured during the challenge test; and C_p= the filtrate concentration measured during the challenge test. Equivalent units shall be used for the feed and filtrate concentrations. If the challenge particulate is not detected in the filtrate, the term C_p is set equal to the detection limit for the purpose of calculating the LRV. An LRV shall be calculated for each membrane module evaluated during the challenge test.

6. The removal efficiency of a membrane filtration process demonstrated during challenge testing shall be expressed as a log removal value (LRVC-Test). If fewer than 20 modules are tested, then LRVC-Test is equal to the lowest of the representative LRVs among the modules tested. If 20 or more modules are tested, then LRVC-Test is equal to the 10th percentile of the representative LRVs among the modules tested. The percentile

is defined by (i/(n+1)) where i is the rank of n individual data points ordered lowest to highest. If necessary, the 10th percentile may be calculated using linear interpolation.

7. The challenge test shall establish a quality control release value (QCRV) for a non-destructive performance test that demonstrates the *Cryptosporidium* removal capability of the membrane filtration module. This performance test shall be applied to each production membrane module used by the system that was not directly challenge tested in order to verify *Cryptosporidium* removal capability. Production modules that do not meet the established QCRV are not eligible for the treatment credit demonstrated during the challenge test.

8. If a previously tested membrane is modified in a manner that could change the removal efficiency of the membrane or the applicability of the non-destructive performance test and associated QCRV, additional challenge testing to demonstrate the removal efficiency of, and determine a new QCRV for, the modified membrane shall be conducted and submitted to the department.

(d) *Direct integrity testing*. Systems shall conduct direct integrity testing in a manner that demonstrates a removal efficiency equal to or greater than the removal credit awarded to the membrane filtration process and meets the requirements described in subds. 1. to 6. A direct integrity test is defined as a physical test applied to a membrane unit in order to identify and isolate integrity breaches, i.e., one or more leaks that could result in contamination of the filtrate.

1. The direct integrity test shall be independently applied to each membrane unit in service. A membrane unit is defined as a group of membrane modules that share common valving that allows the unit to be isolated from the rest of the system for the purpose of integrity testing or other maintenance.

2. The direct integrity method shall have a resolution of 3 micrometers or less, where resolution is defined as the size of the smallest integrity breach that contributes to a response from the direct integrity test.

3. The direct integrity test shall have a sensitivity sufficient to verify the log treatment credit awarded to the membrane filtration process by the department, where sensitivity is defined as the maximum log removal value that can be reliably verified by a direct integrity test. Sensitivity shall be determined using the approach in either this subd. 3. a. or b. as applicable to the type of direct integrity test the system uses.

a. For direct integrity tests that use an applied pressure or vacuum, the direct integrity test sensitivity shall be calculated according to the following equation:

$$LRV_{DIT} = LOG_{10}(Q_p/(VCF \times Q_{breach}))$$

Where:

LRV_{DIT}= the sensitivity of the direct integrity test; Q_p= total design filtrate flow from the membrane unit; Q_{breach}= flow of water from an integrity breach associated with the smallest integrity test response that can be reliably measured, and VCF = volumetric concentration factor. The volumetric concentration factor is the ratio of the suspended solids concentration on the high pressure side of the membrane relative to that in the feed water.

b. For direct integrity tests that use a particulate or molecular marker, the direct integrity test sensitivity shall be calculated according to the following equation:

$$LRV_{DIT} = LOG_{10}(C_f) - LOG_{10}(C_p)$$

Where:

LRV_{DIT}= the sensitivity of the direct integrity test; C_f= the typical feed concentration of the marker used in the test; and C_p= the filtrate concentration of the marker from an integral membrane unit.

4. Systems shall establish a control limit within the sensitivity limits of the direct integrity test that is indicative of an integral membrane unit capable of meeting the removal credit awarded by the department.

5. If the result of a direct integrity test exceeds the control limit established under subd. 4., the system shall remove the membrane unit from service. Systems shall conduct a direct integrity test to verify any repairs, and may return the membrane unit to service only if the direct integrity test is within the established control limit.

6. Systems shall conduct direct integrity testing on each membrane unit at a frequency of not less than 3 times each day that the membrane unit is in operation. The department may approve less frequent testing, based on demonstrated process reliability, the use of multiple barriers effective for *Cryptosporidium*, or reliable process safeguards.

(e) *Indirect integrity monitoring*. Systems shall conduct continuous indirect integrity monitoring on each membrane unit according to the criteria in subds. 1. to 5. Indirect integrity monitoring is defined as monitoring some aspect of filtrate water quality that is indicative of the removal of particulate matter. A system that implements continuous direct integrity testing of membrane units in accordance with the criteria in par. (c)1. to 5. is not subject to the requirements for continuous indirect integrity monitoring. Systems shall submit a monthly report to the department summarizing all continuous indirect integrity monitoring results triggering direct integrity testing and the corrective action that was taken in each case.

1. Unless the department approves an alternative parameter, continuous indirect integrity monitoring shall include continuous filtrate turbidity monitoring.

2. Continuous monitoring shall be conducted at a frequency of no less than once every 15 minutes.

3. Continuous monitoring shall be separately conducted on each membrane unit.

4. If indirect integrity monitoring includes turbidity and if the filtrate turbidity readings are above 0.15 NTU for a period greater than 15 minutes, i.e., 2 consecutive 15-minute readings above 0.15 NTU, direct integrity testing shall immediately be performed on the associated membrane unit as specified in par. (c)1. to 5.

5. If indirect integrity monitoring includes a department-approved alternative parameter and if the alternative parameter exceeds a department-approved control limit for a period greater than 15 minutes, direct integrity testing shall immediately be performed on the associated membrane units as specified in par. (c)1. to 5.

(3) SECOND STAGE FILTRATION. Systems receive 0.5-log *Cryptosporidium* treatment credit for a separate second stage of filtration that consists of sand, dual media, GAC, or other fine grain media following granular media filtration if the department approves. To be eligible for this credit, the first stage of filtration shall be preceded by a coagulation

step and both filtration stages shall treat the entire plant flow taken from a surface water or GWUDI source. A cap, such as GAC, on a single stage of filtration is not eligible for this credit. The department shall approve the treatment credit based on an assessment of the design characteristics of the filtration process.

(4) SLOW SAND FILTRATION AS SECONDARY FILTER. Systems are eligible to receive 2.5-log *Cryptosporidium* treatment credit for a slow sand filtration process that follows a separate stage of filtration if both filtration stages treat entire plant flow taken from a surface water or GWUDI source and no disinfectant residual is present in the influent water to the slow sand filtration process. The department shall approve the treatment credit based on an assessment of the design characteristics of the filtration process. This subsection does not apply to treatment credit awarded to slow sand filtration used as a primary filtration process.

SUBCHAPTER IV – INACTIVATION TOOLBOX COMPONENTS AND CT TABLES

NR 810.46 Inactivation toolbox components. (1) CALCULATION OF CT VALUES.

(a) CT is the product of the disinfectant contact time (T, in minutes) and disinfectant concentration (C, in milligrams per liter). Systems with treatment credit for chlorine dioxide or ozone under sub. (2) or (3) shall calculate CT at least once each day, with both C and T measured during peak hourly flow as specified in s. NR 809.563(1), Table R.

(b) Systems with several disinfection segments in sequence may calculate CT for each segment, where a disinfection segment is defined as a treatment unit process with a measurable disinfectant residual level and a liquid volume. Under this approach, systems shall add the *Cryptosporidium* CT values in each segment to determine the total CT for the treatment plant.

(2) CT VALUES FOR CHLORINE DIOXIDE AND OZONE. (a) Systems receive the *Cryptosporidium* treatment credit for chlorine dioxide by meeting the corresponding chlorine dioxide CT values found in s. NR 810.56 for the applicable water temperature, as described in sub. (1).

(b) Systems receive the *Cryptosporidium* treatment credit for ozone by meeting the corresponding ozone CT values found in s. NR 810.61 for the applicable water temperature,.

(3) SITE-SPECIFIC STUDY. The department may approve alternative chlorine dioxide or ozone CT values to those referenced in sub. (2) on a site-specific basis. The department shall base this approval on a site-specific study a system conducts that follows a department-approved protocol.

(4) ULTRAVIOLET LIGHT. Systems receive *Cryptosporidium*, *Giardia lamblia*, and virus treatment credits for ultraviolet (UV) light reactors by achieving the corresponding UV dose values shown in s. NR 810.62. Systems shall validate and monitor UV reactors as described in pars. (b) and (c) to demonstrate that they are achieving a particular UV dose value for treatment credit.

(a) *UV dose table.* The treatment credits listed in the dose table in s. NR 810.62 are for UV light at a wavelength of 254 nm as produced by a low pressure mercury vapor lamp. To receive treatment credit for other lamp types, systems shall demonstrate an equivalent germicidal dose through reactor validation testing, as described in par. (b).

The UV dose values in this table are applicable only to post-filter applications of UV in filtered systems and to unfiltered systems.

(b) *Reactor validation testing.* Systems shall use UV reactors that have undergone validation testing to determine the operating conditions under which the reactor delivers the UV dose required in par. (a), i.e., validated operating conditions. These operating conditions shall include flow rate, UV intensity as measured by a UV sensor, and UV lamp status.

1. When determining validated operating conditions, systems shall account for the following factors: UV absorbance of the water; lamp fouling and aging; measurement uncertainty of on-line sensors; UV dose distributions arising from the velocity profiles through the reactor; failure of UV lamps or other critical system components; and inlet and outlet piping or channel configurations of the UV reactor.

2. Validation testing shall include the following: Full scale testing of a reactor that conforms uniformly to the UV reactors used by the system and inactivation of a test microorganism whose dose response characteristics have been quantified with a low pressure mercury vapor lamp.

3. The department may approve an alternative approach to validation testing.

(c) *Reactor monitoring.* 1. Systems shall monitor their UV reactors to determine if the reactors are operating within validated conditions, as determined under par. (b). This monitoring shall include UV intensity as measured by a UV sensor, flow rate, lamp status, and other parameters the department designates based on UV reactor operation. Systems shall verify the calibration of UV sensors and shall recalibrate sensors in accordance with a protocol the department approves.

2. To receive treatment credit for UV light, systems shall treat at least 99.9% of the water delivered to the public during each month by UV reactors operating within validated conditions for the required UV dose, as described in pars. (a) and (b). Systems shall demonstrate compliance with this condition by the monitoring required under subd. 1.

CT Values for Inactivation of *Giardia lamblia* Cysts by Free Chlorine
0.5°C (32°F) or lower

Chlorine Concentration (mg/L)	pH ≤ 6 Log Inactivation						pH = 6.5 Log Inactivation						pH = 7.0 Log Inactivation						pH = 7.5 Log Inactivation					
	0.5	1	1.5	2	2.5	3	0.5	1	1.5	2	2.5	3	0.5	1	1.5	2	2.5	3	0.5	1	1.5	2	2.5	3
≤0.4	23	46	69	91	114	137	27	54	82	109	136	163	33	65	98	130	163	195	40	79	119	158	198	237
0.6	24	47	71	94	118	141	28	56	84	112	140	168	33	67	100	133	167	200	40	80	120	159	199	239
0.8	24	48	73	97	121	145	29	57	86	115	143	172	34	68	103	137	171	205	41	82	123	164	205	246
1	25	49	74	99	123	148	29	59	88	117	147	176	35	70	105	140	175	210	42	84	127	169	211	253
1.2	25	51	76	101	127	152	30	60	90	120	150	180	36	72	108	143	179	215	43	86	130	173	216	259
1.4	26	52	78	103	129	155	31	61	92	123	153	184	37	74	111	147	184	221	44	89	133	177	222	266
1.6	26	52	79	105	131	157	32	63	95	126	158	189	38	75	113	151	188	226	46	91	137	182	228	273
1.8	27	54	81	108	135	162	32	64	97	129	161	193	39	77	116	154	193	231	47	93	140	186	233	279
2	28	55	83	110	138	165	33	66	99	131	164	197	39	79	118	157	197	236	48	95	143	191	238	286
2.2	28	56	85	113	141	169	34	67	101	134	168	201	40	81	121	161	202	242	50	99	149	198	248	297
2.4	29	57	86	115	143	172	34	68	103	137	171	205	41	82	124	165	206	247	50	99	149	199	248	298
2.6	29	58	88	117	146	175	35	70	105	139	174	209	42	84	126	168	210	252	51	101	152	203	253	304
2.8	30	59	89	119	148	178	36	71	107	142	178	213	43	86	129	171	214	257	52	103	155	207	258	310
3	30	60	91	121	151	181	36	72	109	145	181	217	44	87	131	174	218	261	53	105	158	211	263	316

Chlorine Concentration (mg/L)	pH = 8.0 Log Inactivation						pH = 8.5 Log Inactivation						pH ≤ 9.0 Log Inactivation					
	0.5	1	1.5	2	2.5	3	0.5	1	1.5	2	2.5	3	0.5	1	1.5	2	2.5	3
≤0.4	46	92	139	185	231	277	55	110	165	219	274	329	65	130	195	260	325	390
0.6	48	95	143	191	238	286	57	114	171	228	285	342	68	136	204	271	339	407
0.8	49	98	148	197	246	295	59	118	177	236	295	354	70	141	211	281	352	422
1	51	101	152	203	253	304	61	122	183	243	304	365	73	146	219	291	364	437
1.2	52	104	157	209	261	313	63	125	188	241	313	376	75	150	226	301	376	451
1.4	54	107	161	214	268	321	65	129	194	258	323	387	77	155	232	309	387	464
1.6	55	110	165	219	274	329	66	132	199	265	331	397	80	159	239	318	398	477
1.8	56	113	169	225	282	338	68	136	204	271	339	407	82	163	245	326	408	489
2	58	115	173	231	288	346	70	139	209	278	348	417	83	167	250	333	417	500
2.2	59	118	177	235	294	353	71	142	213	284	355	426	85	170	256	341	426	511
2.4	60	120	181	241	301	361	73	145	218	290	363	435	87	174	261	348	435	522
2.6	61	123	184	245	307	368	74	148	222	296	370	444	89	178	267	355	444	533
2.8	63	125	188	250	313	375	75	151	226	301	377	452	91	181	272	362	453	543
3	64	127	191	255	318	382	77	153	230	307	383	460	92	184	276	368	460	552

Note:

CT values between the indicated pH values may be determined by linear interpolation.

CT values between the indicated temperatures of different tables may be determined by linear interpolation.

If no interpolation is used, use the CT value at the lower temperature and at the higher pH.

CT Values for Inactivation of *Giardia lamblia* Cysts by Free Chlorine
5°C (41°F)

Chlorine Concentration (mg/L)	pH ≤ 6 Log Inactivation						pH = 6.5 Log Inactivation						pH = 7.0 Log Inactivation						pH = 7.5 Log Inactivation					
	0.5	1	1.5	2	2.5	3	0.5	1	1.5	2	2.5	3	0.5	1	1.5	2	2.5	3	0.5	1	1.5	2	2.5	3
≤0.4	16	32	49	65	81	97	20	39	59	78	98	117	23	46	70	93	116	139	28	55	83	111	138	166
0.6	17	33	50	67	83	100	20	40	60	80	100	120	24	48	72	95	119	143	29	57	86	114	143	171
0.8	17	34	52	69	86	103	20	41	61	81	102	122	24	49	73	97	122	146	29	58	88	117	146	175
1	18	35	53	70	88	105	21	42	63	83	104	125	25	50	75	99	124	149	30	60	90	119	149	179
1.2	18	36	54	71	89	107	21	42	64	85	106	127	25	51	76	101	127	152	31	61	92	122	153	183
1.4	18	36	55	73	91	109	22	43	65	87	108	130	26	52	78	103	129	155	31	62	94	125	156	187
1.6	19	37	56	74	93	111	22	44	66	88	110	132	26	53	79	105	132	158	32	64	96	128	160	192
1.8	19	38	57	76	95	114	23	45	68	90	113	135	27	54	81	108	135	162	33	65	98	131	163	196
2	19	39	58	77	97	116	23	46	69	92	115	138	28	55	83	110	138	165	33	67	100	133	167	200
2.2	20	39	59	79	98	118	23	47	70	93	117	140	28	56	85	113	141	169	34	68	102	136	170	204
2.4	20	40	60	80	100	120	24	48	72	95	119	143	29	57	86	115	143	172	35	70	105	139	174	209
2.6	20	41	61	81	102	122	24	49	73	97	122	146	29	58	88	117	146	175	36	71	107	142	178	213
2.8	21	41	62	83	103	124	25	49	74	99	123	148	30	59	89	119	148	178	36	72	109	145	181	217
3	21	42	63	84	105	126	25	50	76	101	126	151	30	61	91	121	152	182	37	74	111	147	184	221

Chlorine Concentration (mg/L)	pH = 8.0 Log Inactivation						pH = 8.5 Log Inactivation						pH ≤ 9.0 Log Inactivation					
	0.5	1	1.5	2	2.5	3	0.5	1	1.5	2	2.5	3	0.5	1	1.5	2	2.5	3
≤0.4	33	66	99	132	165	198	39	79	118	157	197	236	47	93	140	186	233	279
0.6	34	68	102	136	170	204	41	81	122	163	203	244	49	97	146	194	243	291
0.8	35	70	105	140	175	210	42	84	126	168	210	252	50	100	151	201	251	301
1	36	72	108	144	180	216	43	87	130	173	217	260	52	104	156	208	260	312
1.2	37	74	111	147	184	221	45	89	134	178	223	267	53	107	160	213	267	320
1.4	38	76	114	151	189	227	46	91	134	183	228	274	55	110	165	219	274	329
1.6	39	77	116	155	193	232	47	94	137	187	234	271	56	112	169	225	281	337
1.8	40	79	119	159	198	238	48	96	141	191	239	287	58	115	173	230	288	345
2	41	81	122	162	203	243	49	98	144	196	245	294	59	118	177	235	294	353
2.2	41	83	124	165	207	248	50	100	147	200	250	300	60	120	181	241	301	361
2.4	42	84	127	169	211	253	51	102	150	204	255	306	61	123	184	245	307	368
2.6	43	86	129	172	215	258	52	104	153	208	260	312	63	125	188	250	313	375
2.8	44	88	132	175	219	263	53	106	156	212	265	318	64	127	191	255	318	382
3	45	89	134	179	223	268	54	108	162	216	270	324	65	130	195	259	324	389

Note:

CT values between the indicated pH values may be determined by linear interpolation.

CT values between the indicated temperatures of different tables may be determined by linear interpolation.

If no interpolation is used, use the CT value at the lower temperature and at the higher pH.

CT Values for Inactivation of *Giardia lamblia* Cysts by Free Chlorine
10°C (50°F)

Chlorine Concentration (mg/L)	pH ≤ 6 Log Inactivation						pH = 6.5 Log Inactivation						pH = 7.0 Log Inactivation						pH = 7.5 Log Inactivation					
	0.5	1	1.5	2	2.5	3	0.5	1	1.5	2	2.5	3	0.5	1	1.5	2	2.5	3	0.5	1	1.5	2	2.5	3
≤0.4	12	24	37	49	61	73	15	29	44	59	73	88	17	35	52	69	87	104	21	42	63	83	104	125
0.6	13	25	38	50	63	75	15	30	45	60	75	90	18	36	54	71	89	107	21	43	64	85	107	128
0.8	13	26	39	52	65	78	15	31	46	61	77	92	18	37	55	73	92	110	22	44	66	87	109	131
1	13	26	40	53	66	79	16	31	47	63	78	94	19	37	56	75	93	112	22	45	67	89	112	134
1.2	13	27	40	53	67	80	16	32	48	63	79	95	19	38	57	76	95	114	23	46	69	91	114	137
1.4	14	27	41	55	68	82	16	33	49	65	82	98	19	39	58	77	97	116	23	47	70	93	117	140
1.6	14	28	42	55	69	83	17	33	50	66	83	99	20	40	60	79	99	119	24	48	72	96	120	144
1.8	14	29	43	57	72	86	17	34	51	67	84	101	20	41	61	81	102	122	25	49	74	98	123	147
2	15	29	44	58	73	87	17	35	52	69	87	104	21	41	62	83	103	124	25	50	75	100	125	150
2.2	15	30	45	59	74	89	18	35	53	70	88	105	21	42	64	85	106	127	26	51	77	102	128	153
2.4	15	30	45	60	75	90	18	36	54	71	89	107	22	43	65	86	108	129	26	52	79	105	131	157
2.6	15	31	46	61	77	92	18	37	55	73	92	110	22	44	66	87	109	131	27	53	80	107	133	160
2.8	16	31	47	62	78	93	19	37	56	74	93	111	22	45	67	89	112	134	27	54	82	109	136	163
3	16	32	48	63	79	95	19	38	57	75	94	113	23	46	69	91	114	137	28	55	83	111	138	166

Chlorine Concentration (mg/L)	pH = 8.0 Log Inactivation						pH = 8.5 Log Inactivation						pH ≤ 9.0 Log Inactivation					
	0.5	1	1.5	2	2.5	3	0.5	1	1.5	2	2.5	3	0.5	1	1.5	2	2.5	3
≤0.4	25	50	75	99	124	149	30	59	89	118	148	177	35	70	105	139	174	209
0.6	26	51	77	102	128	153	31	61	92	122	153	183	36	73	109	145	182	218
0.8	26	53	79	105	132	158	32	63	95	126	158	189	38	75	113	151	188	226
1	27	54	81	108	135	162	33	65	98	130	163	195	39	78	117	156	195	234
1.2	28	55	83	111	138	166	33	67	100	133	167	200	40	80	120	160	200	240
1.4	28	57	85	113	142	170	34	69	103	137	172	206	41	82	124	165	206	247
1.6	29	58	87	116	145	174	35	70	106	141	176	211	42	84	127	169	211	253
1.8	30	60	90	119	149	179	36	72	108	143	179	215	43	86	130	173	216	259
2	30	61	91	121	152	182	37	74	111	147	184	221	44	88	133	177	221	265
2.2	31	62	93	124	155	186	38	75	113	150	188	225	45	90	136	181	226	271
2.4	32	63	95	127	158	190	38	77	115	153	192	230	46	92	138	184	230	276
2.6	32	65	97	129	162	194	39	78	117	156	195	234	47	94	141	187	234	281
2.8	33	66	99	131	164	197	40	80	120	159	199	239	48	96	144	191	239	287
3	34	67	101	134	168	201	41	81	122	162	203	243	49	97	146	195	243	292

Note:

CT values between the indicated pH values may be determined by linear interpolation.

CT values between the indicated temperatures of different tables may be determined by linear interpolation.

If no interpolation is used, use the CT value at the lower temperature and at the higher pH.

CT Values for Inactivation of *Giardia lamblia* Cysts by Free Chlorine
15°C (59°F)

Chlorine Concentration (mg/L)	pH ≤ 6 Log Inactivation						pH = 6.5 Log Inactivation						pH = 7.0 Log Inactivation						pH = 7.5 Log Inactivation					
	0.5	1	1.5	2	2.5	3	0.5	1	1.5	2	2.5	3	0.5	1	1.5	2	2.5	3	0.5	1	1.5	2	2.5	3
≤0.4	8	16	25	33	41	49	10	20	30	39	49	59	12	23	35	47	58	70	14	28	42	55	69	83
0.6	8	17	25	33	42	50	10	20	30	40	50	60	12	24	36	48	60	72	14	29	43	57	72	86
0.8	9	17	26	35	43	52	10	20	31	41	51	61	12	24	37	49	61	73	15	29	44	59	73	88
1	9	18	27	35	44	53	11	21	32	42	53	63	13	25	38	50	63	75	15	30	45	60	75	90
1.2	9	18	27	36	45	54	11	21	32	43	53	64	13	25	38	51	63	76	15	31	46	61	77	92
1.4	9	18	28	37	46	55	11	22	33	43	54	65	13	26	39	52	65	78	16	31	47	63	78	94
1.6	9	19	28	37	47	56	11	22	33	44	55	66	13	26	40	53	66	79	16	32	48	64	80	96
1.8	10	19	29	38	48	57	11	23	34	45	57	68	14	27	41	54	68	81	16	33	49	65	82	98
2	10	19	29	39	48	58	12	23	35	46	58	69	14	28	42	55	69	83	17	33	50	67	83	100
2.2	10	20	30	39	49	59	12	23	35	47	58	70	14	28	43	57	71	85	17	34	51	68	85	102
2.4	10	20	30	40	50	60	12	24	36	48	60	72	14	29	43	57	72	86	18	35	53	70	88	105
2.6	10	20	31	41	51	61	12	24	37	49	61	73	15	29	44	59	73	88	18	36	54	71	89	107
2.8	10	21	31	41	52	62	12	25	37	49	62	74	15	30	45	59	74	89	18	36	55	73	91	109
3	11	21	32	42	53	63	13	25	38	51	63	76	15	30	46	61	76	91	19	37	56	74	93	111

Chlorine Concentration (mg/L)	pH = 8.0 Log Inactivation						pH = 8.5 Log Inactivation						pH ≤ 9.0 Log Inactivation					
	0.5	1	1.5	2	2.5	3	0.5	1	1.5	2	2.5	3	0.5	1	1.5	2	2.5	3
≤0.4	17	33	50	66	83	99	20	39	59	79	98	118	23	47	70	93	117	140
0.6	17	34	51	68	85	102	20	41	61	81	102	122	24	49	73	97	122	146
0.8	18	35	53	70	88	105	21	42	63	84	105	126	25	50	76	101	126	151
1	18	36	54	72	90	108	22	43	65	87	108	130	26	52	78	104	130	156
1.2	19	37	56	74	93	111	22	45	67	89	112	134	27	53	80	107	133	160
1.4	19	38	57	76	95	114	23	46	69	91	114	137	28	55	83	110	138	165
1.6	19	39	58	77	97	116	24	47	71	94	118	141	28	56	85	113	141	169
1.8	20	40	60	79	99	119	24	48	72	96	120	144	29	58	87	115	144	173
2	20	41	61	81	102	122	25	49	74	98	123	147	30	59	89	118	148	177
2.2	21	41	62	83	103	124	25	50	75	100	125	150	30	60	91	121	151	181
2.4	21	42	64	85	106	127	26	51	77	102	128	153	31	61	92	123	153	184
2.6	22	43	65	86	108	129	26	52	78	104	130	156	31	63	94	125	157	188
2.8	22	44	66	88	110	132	27	53	80	106	133	159	32	64	96	127	159	191
3	22	45	67	89	112	134	27	54	81	108	135	162	33	65	98	130	163	195

Note:

CT values between the indicated pH values may be determined by linear interpolation.

CT values between the indicated temperatures of different tables may be determined by linear interpolation.

If no interpolation is used, use the CT value at the lower temperature and at the higher pH.

CT Values for Inactivation of *Giardia lamblia* Cysts by Free Chlorine
20°C (68°F)

Chlorine Concentration (mg/L)	pH ≤ 6 Log Inactivation						pH = 6.5 Log Inactivation						pH = 7.0 Log Inactivation						pH = 7.5 Log Inactivation					
	0.5	1	1.5	2	2.5	3	0.5	1	1.5	2	2.5	3	0.5	1	1.5	2	2.5	3	0.5	1	1.5	2	2.5	3
≤0.4	6	12	18	24	30	36	7	15	22	29	37	44	9	17	26	35	43	52	10	21	31	41	52	62
0.6	6	13	19	25	32	38	8	15	23	30	38	45	9	18	27	36	45	54	11	21	32	43	53	64
0.8	7	13	20	26	33	39	8	15	23	31	38	46	9	18	28	37	46	55	11	22	33	44	55	66
1	7	13	20	26	33	39	8	16	24	31	39	47	9	19	28	37	47	56	11	22	34	45	56	67
1.2	7	13	21	27	33	40	8	16	24	32	40	48	10	19	29	38	48	57	12	23	35	46	58	69
1.4	7	14	21	27	34	41	8	16	25	33	41	49	10	19	29	39	48	58	12	23	35	47	58	70
1.6	7	14	22	28	35	42	8	17	25	33	42	50	10	20	30	39	49	59	12	24	36	48	60	72
1.8	7	14	22	29	36	43	9	17	26	34	43	51	10	20	31	41	51	61	12	25	37	49	62	74
2	7	15	22	29	37	44	9	17	26	35	43	52	10	21	31	41	52	62	13	25	38	50	63	75
2.2	7	15	22	29	37	44	9	18	27	35	44	53	11	21	32	42	53	63	13	26	39	51	64	77
2.4	8	15	23	30	38	45	9	18	27	36	45	54	11	22	33	43	54	65	13	26	39	52	65	78
2.6	8	15	23	31	38	46	9	18	28	37	46	55	11	22	33	44	55	66	13	27	40	53	67	80
2.8	8	16	24	31	39	47	9	19	28	37	47	56	11	22	34	45	56	67	14	27	41	54	68	81
3	8	16	24	31	39	47	10	19	29	38	48	57	11	23	34	45	57	68	14	28	42	55	69	83

Chlorine Concentration (mg/L)	pH = 8.0 Log Inactivation						pH = 8.5 Log Inactivation						pH ≤ 9.0 Log Inactivation					
	0.5	1	1.5	2	2.5	3	0.5	1	1.5	2	2.5	3	0.5	1	1.5	2	2.5	3
≤0.4	12	25	37	49	62	74	15	30	45	59	74	89	18	35	53	70	88	105
0.6	13	26	39	51	64	77	15	31	46	61	77	92	18	36	55	73	91	109
0.8	13	26	40	53	66	79	16	32	48	63	79	95	19	38	57	75	94	113
1	14	27	41	54	68	81	16	33	49	65	82	98	20	39	59	78	98	117
1.2	14	28	42	55	69	83	17	33	50	67	83	100	20	40	60	80	100	120
1.4	14	28	43	57	71	85	17	34	52	69	86	103	21	41	62	82	103	123
1.6	15	29	44	58	73	87	18	35	53	70	88	105	21	42	63	84	105	126
1.8	15	30	45	59	74	89	18	36	54	72	90	108	22	43	65	86	108	129
2	15	30	46	61	76	91	18	37	55	73	92	110	22	44	66	88	110	132
2.2	16	31	47	62	78	93	19	38	57	75	94	113	23	45	68	90	113	135
2.4	16	32	48	63	79	95	19	38	58	77	96	115	23	46	69	92	115	138
2.6	16	32	49	65	81	97	20	39	59	78	98	117	24	47	71	94	118	141
2.8	17	33	50	66	83	99	20	40	60	79	99	119	24	48	72	95	119	143
3	17	34	51	67	84	101	20	41	61	81	102	122	24	49	73	97	122	146

Note:

CT values between the indicated pH values may be determined by linear interpolation.

CT values between the indicated temperatures of different tables may be determined by linear interpolation.

If no interpolation is used, use the CT value at the lower temperature and at the higher pH.

CT Values for Inactivation of *Giardia lamblia* Cysts by Free Chlorine
25°C (77°F)

Chlorine Concentration (mg/L)	pH ≤ 6 Log Inactivation						pH = 6.5 Log Inactivation						pH = 7.0 Log Inactivation						pH = 7.5 Log Inactivation					
	0.5	1	1.5	2	2.5	3	0.5	1	1.5	2	2.5	3	0.5	1	1.5	2	2.5	3	0.5	1	1.5	2	2.5	3
≤0.4	4	8	12	16	20	24	5	10	15	19	24	29	6	12	18	23	29	35	7	14	21	28	35	42
0.6	4	8	13	17	21	25	5	10	15	20	25	30	6	12	18	24	30	36	7	14	22	29	36	43
0.8	4	9	13	17	22	26	5	10	16	21	26	31	6	12	19	25	31	37	7	15	22	29	37	44
1	4	9	13	17	22	26	5	10	16	21	26	31	6	12	19	25	31	37	8	15	23	30	38	45
1.2	5	9	14	18	23	27	5	11	16	21	27	32	6	13	19	25	32	38	8	15	23	31	38	46
1.4	5	9	14	18	23	27	6	11	17	22	28	33	7	13	20	26	33	39	8	16	24	31	39	47
1.6	5	9	14	19	23	28	6	11	17	22	28	33	7	13	20	27	33	40	8	16	24	32	40	48
1.8	5	10	15	19	24	29	6	11	17	23	28	34	7	14	21	27	34	41	8	16	25	33	41	49
2	5	10	15	19	24	29	6	12	18	23	29	35	7	14	21	27	34	41	8	17	25	33	42	50
2.2	5	10	15	20	25	30	6	12	18	23	29	35	7	14	21	28	35	42	9	17	26	34	43	51
2.4	5	10	15	20	25	30	6	12	18	24	30	36	7	14	22	29	36	43	9	17	26	35	43	52
2.6	5	10	16	21	26	31	6	12	19	25	31	37	7	15	22	29	37	44	9	18	27	35	44	53
2.8	5	10	16	21	26	31	6	12	19	25	31	37	8	15	23	30	38	45	9	18	27	36	45	54
3	5	11	16	21	27	32	6	13	19	25	32	38	8	15	23	31	38	46	9	18	28	37	46	55

Chlorine Concentration (mg/L)	pH = 8.0 Log Inactivation						pH = 8.5 Log Inactivation						pH ≤ 9.0 Log Inactivation					
	0.5	1	1.5	2	2.5	3	0.5	1	1.5	2	2.5	3	0.5	1	1.5	2	2.5	3
≤0.4	8	17	25	33	42	50	10	20	30	39	49	59	12	23	35	47	58	70
0.6	9	17	26	34	43	51	10	20	31	41	51	61	12	24	37	49	61	73
0.8	9	18	27	35	44	53	11	21	32	42	53	63	13	25	38	50	63	75
1	9	18	27	36	45	54	11	22	33	43	54	65	13	26	39	52	65	78
1.2	9	18	28	37	46	55	11	22	34	45	56	67	13	27	40	53	67	80
1.4	10	19	29	38	48	57	12	23	35	46	58	69	14	27	41	55	68	82
1.6	10	19	29	39	48	58	12	23	35	47	58	70	14	28	42	56	70	84
1.8	10	20	30	40	50	60	12	24	36	48	60	72	14	29	43	57	72	86
2	10	20	31	41	51	61	12	25	37	49	62	74	15	29	44	59	73	88
2.2	10	21	31	41	52	62	13	25	38	50	63	75	15	30	45	60	75	90
2.4	11	21	32	42	53	63	13	26	39	51	64	77	15	31	46	61	77	92
2.6	11	22	33	43	54	65	13	26	39	52	65	78	16	31	47	63	78	94
2.8	11	22	33	44	55	66	13	27	40	53	67	80	16	32	48	64	80	96
3	11	22	34	45	56	67	14	27	41	54	68	81	16	32	49	65	81	97

Note:

CT values between the indicated pH values may be determined by linear interpolation.

CT values between the indicated temperatures of different tables may be determined by linear interpolation.

If no interpolation is used, use the CT value at the lower temperature and at the higher pH.

This page intentionally left blank

NR 810.53 CT table for viruses when using free chlorine

CT Values for Inactivation of Viruses by Free Chlorine								
Temperature (C)	Log Inactivation							
	1.0		2.0		3.0		4.0	
	pH		pH		pH		pH	
	6 - 9	10	6 - 9	10	6 - 9	10	6 - 9	10
0.5	3	23	6	45	9	66	12	90
5	2	15	4	30	6	44	8	60
10	2	11	3	22	4	33	6	45
15	1	8	2	15	3	22	4	30
20	1	6	1	11	2	16	3	22
25	1	3	1	7	1	11	2	15

NR 810.54 CT table for *Giardia lamblia* when using chlorine dioxide

CT Values for Inactivation of *Giardia lamblia* Cysts by Chlorine Dioxide						
Inactivation	Temperature (C)					
	≤1	5	10	15	20	25
0.5-log	10	4.3	4	3.2	2.5	2
1-log	21	8.7	7.7	6.3	5	3.7
1.5-log	32	13	12	10	7.5	5.5
2-log	42	17	15	13	10	7.3
2.5-log	52	22	19	16	13	9
3-log	63	26	23	19	15	11

NR 810.55 CT table for viruses when using chlorine dioxide

CT Values for Inactivation of Viruses by Chlorine Dioxide pH 6-9						
Inactivation	Temperature (C)					
	≤1	5	10	15	20	25
2-log	8.4	5.6	4.2	2.8	2.1	1.4
3-log	25.6	17.1	12.8	8.6	6.4	4.3
4-log	50.1	33.4	25.1	16.7	12.5	8.4

NR 810.56 CT table for *Cryptosporidium* when using chlorine dioxide

Log credit	Water Temperature, °C										
	≤0.5	1	2	3	5	7	10	15	20	25	30
0.25	159	153	140	128	107	90	69	45	29	19	12
0.5	319	305	279	256	214	180	138	89	58	38	24
1.0	637	610	558	511	429	360	277	179	116	75	49
1.5	956	915	838	767	643	539	415	268	174	113	73
2.0	1275	1220	1117	1023	858	719	553	357	232	150	98
2.5	1594	1525	1396	1278	1072	899	691	447	289	188	122
3.0	1912	1830	1675	1534	1286	1079	830	536	347	226	147

[1]Systems may use this equation to determine log credit between the indicated values: Log credit = $(0.001506 \times (1.09116)^{Temp}) \times CT$.

NR 810.57 CT table for *Giardia lamblia* when using chloramines

CT Values for Inactivation of *Giardia lamblia* Cysts by Chloramine pH 6-9						
Inactivation	**Temperature (C)**					
	≤1	**5**	**10**	**15**	**20**	**25**
0.5-log	**635**	**365**	**310**	**250**	**185**	**125**
1-log	**1,270**	**736**	**615**	**500**	**370**	**250**
1.5-log	**1,900**	**1,100**	**930**	**750**	**550**	**375**
2-log	**2,535**	**1,470**	**1,230**	**1,000**	**735**	**500**
2.5-log	**3,170**	**1,830**	**1,540**	**1,250**	**915**	**625**
3-log	**3,800**	**2,200**	**1,850**	**1,500**	**1,100**	**750**

NR 810.58 CT table for viruses when using chloramines

CT Values for Inactivation of Viruses by Chloramine						
Inactivation	Temperature (C)					
	≤1	5	10	15	20	25
2-log	1,243	857	643	428	321	214
3-log	2,063	1,423	1,067	712	534	356
4-log	2,883	1,988	1,491	994	746	497

NR 810.59 CT table for *Giardia lamblia* when using ozone

CT Values for Inactivation of *Giardia lamblia* Cysts by Ozone						
Inactivation	Temperature (C)					
	≤1	5	10	15	20	25
0.5-log	0.48	0.32	0.23	0.16	0.12	0.08
1-log	0.97	0.63	0.48	0.32	0.24	0.16
1.5-log	1.5	0.95	0.72	0.48	0.36	0.24
2-log	1.9	1.3	0.95	0.63	0.48	0.32
2.5-log	2.4	1.6	1.2	0.79	0.60	0.40
3-log	2.9	1.9	1.43	0.95	0.72	0.48

NR 810.60 CT table for viruses when using ozone

CT Values for Inactivation of Viruses by Ozone						
Inactivation	Temperature (C)					
	≤1	5	10	15	20	25
2-log	0.9	0.6	0.5	0.3	0.25	0.15
3-log	1.4	0.9	0.8	0.5	0.4	0.25
4-log	1.8	1.2	1.0	0.6	0.5	0.3

NR 810.61 CT table for *Cryptosporidium* when using ozone

Log credit	Water Temperature, °C										
	≤0.5	1	2	3	5	7	10	15	20	25	30
0.25	6.0	5.8	5.2	4.8	4.0	3.3	2.5	1.6	1.0	0.6	0.39
0.5	12	12	10	9.5	7.9	6.5	4.9	3.1	2.0	1.2	0.78
1.0	24	23	21	19	16	13	9.9	6.2	3.9	2.5	1.6
1.5	36	35	31	29	24	20	15	9.3	5.9	3.7	2.4
2.0	48	46	42	38	32	26	20	12	7.8	4.9	3.1
2.5	60	58	52	48	40	33	25	16	9.8	6.2	3.9
3.0	72	69	63	57	47	39	30	19	12	7.4	4.7

[1]Systems may use this equation to determine log credit between the indicated values: Log credit = $(0.0397 \times (1.09757)^{Temp}) \times CT$.

NR 810.62 UV dose table for *Cryptosporidium*, *Giardia lamblia,* and viruses

Log credit	*Cryptosporidium* UV dose (mJ/cm^2)	*Giardia lamblia* UV dose (mJ/cm^2)	Virus UV dose (mJ/cm^2)
0.5	1.6	1.5	39
1.0	2.5	2.1	58
1.5	3.9	3.0	79
2.0	5.8	5.2	100
2.5	8.5	7.7	121
3.0	12	11	143
3.5	15	15	163
4.0	22	22	186

SECTION 3. NR 811 is repealed and recreated to read:

Chapter NR 811

DESIGN REQUIREMENTS FOR COMMUNITY WATER SYSTEMS

NR 811.01	Applicability.
NR 811.02	Definitions.
NR 811.03	Alternative requirements.
NR 811.04	Drinking water standards.
NR 811.05	Underground placement of substances.
NR 811.06	Cross connections and interconnections.
NR 811.07	Interconnections with other acceptable water sources.

SUBCHAPTER I — SUBMISSION OF PLANS

NR 811.08	General requirements.
NR 811.09	Specific requirements for waterworks, plans, specifications, and engineering reports.
NR 811.10	Owner approval requirement.
NR 811.11	Resident project representative.

SUBCHAPTR II — SOURCE DEVELOPMENT - GROUNDWATER

NR 811.12	Wells.
NR 811.13	Abandonment of wells.
NR 811.14	Special requirements for wells developed in unconsolidated formations.
NR 811.15	Special requirements for collector wells.
NR 811.16	Special requirements for dug wells and springs.
NR 811.17	Special requirements for infiltration lines.
NR 811.18	Special requirements for sandstone wells.
NR 811.19	Special requirements for limestone or dolomite wells.
NR 811.20	Special requirements for granite wells.

SUBCHAPTER III — SOURCE DEVELOPMENT - SURFACE WATER

NR 811.21	General requirements.
NR 811.22	Intakes.
NR 811.23	Shore wells.
NR 811.231	Off-stream raw water storage.
NR 811.232	Intake chemical treatment.

SUBCHAPTER IV — PUMPING STATIONS, PUMPHOUSES AND WATER TREATMENT PLANT BUILDINGS

NR 811.24	General requirements.
NR 811.25	Buildings.
NR 811.26	Number of pumping units.
NR 811.27	Auxiliary power.
NR 811.28	Additional requirements.

SUBCHAPTER V — PUMPING EQUIPMENT AND APPURTENANCES

NR 811.29	Pumping capacity requirements.
NR 811.30	General pump, motor and wiring installation requirements.
NR 811.31	Line-shaft vertical turbine pumps.
NR 811.32	Submersible vertical turbine pumps.
NR 811.33	Motor protection.
NR 811.34	Pump variable output control devices.
NR 811.35	Pitless units.
NR 811.36	Well appurtenances.
NR 811.37	Pump Discharge lines.

SUBCHAPTER VI — CHEMICAL ADDITION

NR 811.38	General.
NR 811.39	Feed equipment.
NR 811.40	Storage and handling.

SUBCHAPTER VII — TREATMENT

NR 811.41	General treatment design.
NR 811.42	Treatment of water from surface water sources.
NR 811.43	Treatment of water from groundwater sources.
NR 811.44	Pilot Testing.
NR 811.45	Aeration.
NR 811.46	Arsenic removal.
NR 811.47	Clarification.
NR 811.48	Chlorination.
NR 811.49	Filtration - gravity.
NR 811.50	Filtration - membrane.
NR 811.51	Fluoridation.
NR 811.52	Iron and manganese control.
NR 811.53	Organics removal.
NR 811.54	Ozonation.
NR 811.55	Radionuclide removal.
NR 811.56	Sequestration.
NR 811.57	Softening.
NR 811.58	Stabilization.
NR 811.59	Taste and odor control.

NR 811.60 Ultraviolet (UV) light.

SUBCHAPTER VIII — HYDRO-PNEUMATIC TANKS
NR 811.61 General.

SUBCHAPTER IX — STORAGE FACILITIES
NR 811.62 Volume and pressure.
NR 811.63 Location.
NR 811.64 Construction details.
NR 811.65 Plant storage.
NR 811.66 Distribution system storage.

SUBCHAPTER X — DISTRIBUTION SYSTEMS
NR 811.67 Applicability.
NR 811.68 Ownership of municipal water distribution systems.
NR 811.69 Materials.
NR 811.70 Water main design.
NR 811.71 Hydrants.
NR 811.72 Air-relief facilities and valve and meter chambers.
NR 811.73 Installation of mains.
NR 811.74 Separation of water mains and sanitary or storm sewer mains.
NR 811.75 Separation of water mains and other contamination sources.
NR 811.76 Surface water crossings.
NR 811.77 Common casing crossings.
NR 811.78 Water loading stations.

SUBCHAPTER XI — WATER PRESSURE BOOSTER STATIONS
NR 811.79 General.
NR 811.80 Location.
NR 811.81 Pumps and pressures.
NR 811.82 Storage requirements.
NR 811.83 Emergency power requirements.
NR 811.84 Station requirements.

SUBCHAPTER XII — WASTE DISPOSAL
NR 811.85 General.
NR 811.851 Sanitary wastes.
NR 811.852 Floor drainage.
NR 811.853 Backwash wastewater from iron and manganese filters.
NR 811.854 Brine wastes from ion exchange plants.
NR 811.855 Wastewater from reverse osmosis plants.
NR 811.856 Water treatment plant wastewater radionuclide content compliance with the Unity Equation.

NR 811.857 Backwash wastewater from lime softening water treatment plants.
NR 811.858 Lime softening sludge.
NR 811.859 Spent media.
NR 811.860 Backwash wastewater from surface water plants.
NR 811.861 Alum or other coagulant sludge.
NR 811.862 Recycling backwash wastewater.

SUBCHAPTER XIII — AQUIFER STORAGE RECOVERY

NR 811.87 General.
NR 811.88 ASR well performance requirements.
NR 811.89 Well construction requirements for ASR wells.
NR 811.90 Equipment, appurtenances and piping for ASR wells and ASR systems.
NR 811.91 ASR system pilot studies.
NR 811.92 ASR system development testing.
NR 811.93 Operating an ASR system.

APPENDIX

Figure No. 1 Pump capacities for domestic water service.
Figure No. 2 Line-shaft vertical turbine pump base installation. (No outer well casing)
Figure No. 3 Line-shaft vertical turbine pump base installation. (With an inner ungrouted well casing)
Figure No. 4 Submersible vertical turbine pump base installation. (Without an outer casing)
Figure No. 5 Submersible vertical turbine pump base installation. (With an inner ungrouted well casing)
Figure No. 6 Submersible vertical turbine pump base installation. (With an outer well casing installed to provide a protective collar.)
Figure No. 7 Pitless unit installations.
Figure No. 8 Example line-shaft vertical turbine pump and discharge piping installation.
Figure No. 9 Example submersible vertical turbine pump and discharge piping installation.
Figure No. 10 Common trench installation requirements for water main and sanitary or storm sewers.
Figure No. 11 Acceptable water loading station devices.

Note: Chapter NR 111 as it existed on April 30, 1992 was repealed and a new chapter NR 811 was created effective May 1, 1992.

NR 811.01 Applicability. This chapter governs the general operation, design and construction of community water systems and the construction of any water system serving 7 or more single family homes, 10 or more duplex living units, 10 or more mobile homes, 10 or more condominium units or 10 or more apartment units. One duplex equals two living units. The standards for design and construction shall be considered minimum standards for new facilities and the minimum standards to which existing facilities shall be upgraded when improvements are undertaken at those facilities except for existing systems where all of the living units are owned by a single owner and the owner provides information indicating that less than 25 year-round residents will be served. These standards may be imposed on a case-by-case basis to existing facilities when the department determines that a health risk exists due to the water system.

Note: The authority to promulgate and enforce these rules is contained in chs. 280 and 281, Stats. Pursuant to s. 299.97, Stats., any person who violates this chapter shall forfeit not less than $10 nor more than $5,000 for each violation. Each day of continued violation is a separate offense.

NR 811.02 Definitions. In this chapter:

(1) "ANSI" means the American National Standards Institute, 25 West 43rd St, New York, NY 10036.

(2) "API" means the American Petroleum Institute, 1220 L Street NW, Washington DC 20005-4070.

(3) "Approval" means the written approval of the department for any project requiring approval pursuant to s. 281.41, Stats., and s. NR 108.03 for community systems.

(4) "Aquifer storage recovery" or "ASR" means placement of treated drinking water underground through a well for the purpose of storing and later recovering the water through the same well for potable use.

Note: Underground placement of water for the purpose of restoring an aquifer is not included in the definition of "aquifer storage recovery" or "ASR."

(5) "ASR system" means all of the ASR wells, ASR monitoring wells and related appurtenances within a municipal water system and any interconnected public water system served by the municipal water system.

(6) "ASTM" or "ASTM International" means the organization formerly knows as the American Society for Testing and Material, 100 Barr Harbor Drive, PO Box C700, West Conshohocken, Pennsylvania 19148-2959.

(7) "AWWA" means the American Water Works Association, 6666 West Quincy Avenue, Denver, Colorado 80235.

(8) "Blackwater" means wastewater contaminated by human body waste, toilet paper and any other material intended to be deposited in a receptor designed to receive urine or feces.

(9) "Building" means a structure for support, shelter, or enclosure of persons or property.

(10) ”Building drain” means horizontal piping within or under a building, installed below the lowest fixture or the lowest floor level from which fixtures can drain by gravity to the building sewer.

(11) “Building drain, storm” means a building drain which conveys storm water, clear water, or both.

(12) “Building sewer” means that part of the drain system not within or under a building which conveys its discharge to a public sewer, private interceptor main sewer, private onsite wastewater treatment system or other point of discharge or dispersal.

(13) “Building sewer, sanitary” means a building sewer which conveys wastewater consisting in part of domestic wastewater.

(14) “Building sewer, storm” means a building sewer which conveys storm water, clear water, or both.

(15) “Chlorine Institute” means the Chlorine Institute, Inc., 1300 Wilson Boulevard, Arlington, VA 22209.

(16) “Community water system” means a public water system which serves at least 15 service connections used by year-round residents or regularly serves at least 25 year-round residents. Any water system serving 7 or more single family homes, 10 or more mobile homes, 10 or more apartment units, 10 or more duplex living units or 10 or more condominium units shall be considered a community water system unless information is provided by the owners indicating that 25 year-round residents will not be served.

(17) “Cross connection” means a connection or potential connection between any part of a water supply system and another environment containing substances in a manner that, under any circumstances, would allow the substances to enter the water supply system by means of back siphonage or back pressure.

(18) “CT” or “CT calc” is the product of the “residual disinfectant concentration” (C) in mg/l determined before or at the first customer, and the corresponding “disinfectant contact time” (T) in minutes, i.e., “C” x “T”. If a public water system applies disinfectants at more than one point prior to the first customer, it shall determine the CT of each disinfectant sequence before or at the first customer, to determine the total percent inactivation or “total inactivation ratio.” The inactivation ratio for a single disinfectant sequence is:

$$\frac{CT_{calc}}{CT_{table}}$$

where “CT_{table}” is the CT value required for the target organism and the target level of inactivation. The sum of the inactivation ratios, or total inactivation ratio for a series of disinfection sequences is:

$$\sum \frac{(CT_{calc})}{CT_{table}}$$

and is calculated by adding together the inactivation ratio for each disinfection sequence. In determining the total inactivation ratio, the public water system owner or operator shall determine the residual disinfectant concentration of each sequence and corresponding contact time before any subsequent disinfection application points. A total inactivation ratio equal to or greater than 1.0 is assumed to provide the target level of disinfection of the target organism.

(19) “Department” means the department of natural resources.

(20) "Disinfectant contact time" ("T" in CT calculations) means the time in minutes that it takes for water to move from the point of disinfectant application or the previous point of disinfectant residual measurement to a point before or at the point where residual disinfectant concentration ("C") is measured. Where only one "C" is measured, "T" is the time in minutes that it takes for water to move from the point of disinfectant application to a point before or where residual disinfectant concentration ("C") is measured. Where more than one "C" is measured, "T" is determined as follows:

(a) For the first measurement of "C", the time in minutes that it takes for water to move from the first or only point of disinfectant application to a point before or at the point where the first "C" is measured.

(b) For subsequent measurements of "C", the time in minutes that it takes for water to move from the previous "C" measurement point to the "C" measurement point for which the particular "T" is being calculated. Disinfectant contact time in pipelines shall be calculated based on "plug flow" by dividing the internal volume of the pipe by the maximum hourly flow rate through the pipe. Disinfectant contact time within mixing basins and storage reservoirs shall be determined by tracer studies or other department approved equivalent demonstration.

(21) "Disinfection profile" means a summary of daily *Giardia lamblia* inactivation through the treatment plant. The procedure for developing a disinfection profile is contained in s. NR 810.34.

(22) "Displacement zone" means the 3-dimensional subsurface region surrounding an aquifer storage recovery well into which treated drinking water is placed for storage and later recovery.

(23) "Distribution system" means all pipes or conduits by which water is delivered to consumers except piping inside buildings served, water services and private water mains as defined in ch. Comm 81.

(24) "Drillhole" means any of the following:

(a) Any hole that is bored, drilled or driven.

(b) Any dug hole that is deeper than it is wide.

(c) Any excavation, shaft or other opening similar to a hole described in par. (a) or (b).

(25) "Dry land access" means a vehicular access route which is above the regional flood elevation and which connects land located in the floodplain to land outside the floodplain.

(26) "Energy Efficient" means that the proposed improvement will consume the minimum amount of energy to meet operational performance requirements throughout the life of the facility or system.

(27) "Entry point" means a location in the water system after treatment or chemical addition, if any, but prior to the distribution system. A sample collected in the distribution system may be considered an entry point sample if the department has determined it is more representative of the water sources.

(28) "Filtration" means a process for removing particulate matter from water by passage through porous media.

(29) "French drain" means a buried dry well or sump that receives building domestic or floor drain wastewater or both.

(30) "Graywater" means wastewater contaminated by waste materials, exclusive of urine, feces or industrial waste, deposited into plumbing drain systems.

(31) "Groundwater" means any of the waters of the state, as defined in s. 281.01 (18), Stats. occurring in a saturated subsurface geological formation of rock or soil.

(32) "Groundwater source" means a source of groundwater obtained from horizontal collectors, infiltration lines, springs, and dug, drilled or other types of wells.

(33) "Groundwater under the direct influence of surface water" (GWUDI) means any water beneath the surface of the ground with either of the following:

(a) Occurrence of insects or other macroorganisms, algae or large diameter pathogens such as *Giardia lamblia* or *Cryptosporidium*, in greater than or equal to 10% of representative source water samples collected over a period of 6 months, immediately prior to the first or only point of disinfectant application.

(b) Evidence of relatively rapid shifts in water characteristics such as turbidity, temperature, conductivity, or pH which closely correlate to climatological or surface water conditions where the department determines that these shifts are indications of the potential for contamination of the groundwater by the organisms identified in par. (a).

(34) "Hydrofracturing" means hydraulic fracturing of an aquifer by injecting potable chlorinated water into a bedrock formation well under pressures great enough to open the bedrock along bedding planes, joints and fractures.

(35) "Impulse generation" or "gas bursting" means the directed quick release of compressed gases and other impulse generation techniques used to develop or rehabilitate drillholes, well screens and gravel pack.

(36) "Living unit" means a residence, apartment unit, condominium unit, duplex unit, manufactured home, or other domicile.

(37) "Membrane filtration" means a pressure or vacuum driven separation process in which particulate matter larger than 1 micrometer is rejected by an engineered barrier, primarily through a size-exclusion mechanism, and which has a measurable removal efficiency of a target organism that can be verified through the application of a direct integrity test. It includes the common membrane technologies of microfiltration, ultrafiltration, nanofiltration, and reverse osmosis.

(38) "Monitoring well" means a well or drillhole constructed for the purpose of obtaining information on the physical, chemical, radiological or biological characteristics of the groundwater.

(39) "Municipal water system" means a community water system owned by a city, village, county, town, town sanitary district, utility district, public inland lake and rehabilitation district, municipal water district or a federal, state, county or municipal owned institution for congregate care or correction, or a privately owned water utility serving the foregoing.

(40) "Non-community water system" means a public water system that is not a community water system.

(41) "NSF or NSF International" means the organization formerly known as the National Sanitation Foundation, PO Box 130140, 789 N. Dixboro Road,, Ann Arbor, Michigan 48113-0140.

(42) "Other-than-municipal (OTM) water system" means a community water system that is not a municipal water system.

(43) "Owner" means any person who owns or operates a public water system.

(44) "Peak demand" means the maximum water demand in gallons per minute at any given time. The peak demand is sometimes estimated to be 2.0 times the total maximum day water use in gallons averaged over 1,440 minutes/day or the peak hour demand in gallons per minute on the maximum day of use.

(45) "Person" means an individual, corporation, company, association, cooperative, trust, institution, partnership, state, municipality or federal agency.

(46) "POWTS" means a private onsite wastewater treatment system.

(47) "POWTS component" means any subsystem, subassembly or other system designed for use in or as part of a private onsite wastewater treatment system which may include treatment, dispersal or holding, and related piping.

(48) "POWTS dispersal component" means a device or method that is intended to promote the assimilation of treated wastewater by the environment.

(49) "POWTS holding component" means any receptacle intended to collect wastewater for a period of time, including holding and dosing tanks.

(50) "POWTS treatment component" means a device or method that is intended to reduce the contaminant load of wastewater.

(51) "Professional Engineer" or "PE" means an individual licensed as a professional engineer by the Wisconsin department of regulation and licensing.

(52) "Protective casing" means the well casing providing the primary sanitary protection and that is grouted in place to a department approved depth.

(53) "Public water system" or "system" or "PWS" means a system for the provision to the public of piped water for human consumption through pipes or other constructed conveyances, if the system has at least 15 service connections or regularly serves an average of at least 25 individuals daily at least 60 days out of the year. A public water system is either a "community water system" or a "non-community water system." A system:

(a) Includes any collection, treatment, storage and distribution facilities under control of the operator of the system and used primarily in connection with the system.

(b) Includes any collection or pretreatment storage facilities not under the system's control which are used primarily in connection with the system.

Note: The definition of public water system as regulated by this chapter is broader and includes more water systems than those governed by the public service commission under its definition of a public utility in ch. 196, Stats.

(54) "Pump installer" or "licensed pump installer" has the same meaning as "licensed pump installer," as designated in s. 280.01 (2e), Stats.

Note: The statutory definition of "licensed pump installer" is any individual who has paid the annual license fee under s. 280.15 (2m) (c) 2. and obtained a license under s. 280.15 (2m) as a pump installer.

(55) "Pump installing" has the meaning designated in s. 280.01 (5).

Note: The statutory definition of "pump installing" means the industry and procedure employed in the placement and preparation for operation of equipment and materials utilized in withdrawing or obtaining water from a well for consumption or use, including all construction involved in making entrance to the well and establishing such seals and safeguards as are necessary to protect such water from contamination.

(56) “Recharge area” means the total land area contributing water to a well.

(57) “Regional flood” means a flood determined to be representative of large floods known to have occurred in Wisconsin or which may be expected to occur on a particular lake, river or stream once in every 100 years.

(58) “Residual disinfectant concentration” (“C” in CT calculations) means the concentration of disinfectant measured in mg/l in a representative sample of water.

(59) “Reviewable project” has the meaning in s. NR 108.02 (13).

(60) “Spring” has the meaning specified in s. 281.34 (1) (f), Stats.

Note: s. 281.34 (1) (f), Stats., defines “spring” to mean “an area of concentrated groundwater discharge occurring at the surface of the land that results in a flow of at least one cubic foot per second at least 80% of the time.”

(61) “Supplier of water” has the same meaning as “owner” in s. NR 811.02 (42).

(62) “Surface water” means all water which is open to the atmosphere and subject to surface runoff.

(63) “Surface water systems” means public water systems using surface water or groundwater under the direct influence of surface water as a source and that are subject to the requirements of 40 CFR 141, subpart H, P, and W, which contains the national primary drinking water regulations.

(64) “Treated drinking water” means potable water that has been subjected to treatment methods approved by the department to comply with the primary drinking water standards contained in ch. NR 809 and which is obtained directly from a municipal water system via piping from the municipal water distribution system to the point of underground injection.

(65) “Underground injection” means placement of any substance underground through a well, drillhole or water system.

(66) “Utility” means a public utility as defined in ch. 196, Stats.

(67) “UV” means ultraviolet light.

(68) “Variable output control device” means a physical or electronic device such as a control valve, variable speed drive unit, variable frequency drive unit or similar device to be used to control the gallon per minute pump discharge rate and/or distribution system pressure.

(69) “Virus” means a virus of fecal origin which is infectious to humans by waterborne transmission.

(70) “Waterworks” or “water system” means all structures, conduits and appurtenances by means of which water is delivered to consumers except piping and fixtures inside buildings served, and service pipes from buildings to street mains.

(71) “Well” has the meaning specified in s. 281.34 (1) (h), Stats.

Note: Section 281.34 (1) (h), Stats., defines “well” to mean “any drillhole or other excavation or opening deeper than it is wide that extends more than 10 feet below the ground surface and is constructed for the purpose of obtaining groundwater.”

(72) “Well driller” or “licensed well driller” has the meaning as “licensed well driller,” as designated in s. 280.01 (2m), Stats.

Note: The statutory definition of “licensed well driller” is any individual who has paid the annual license fee under s. 280.15 (2m) (c) 1. and obtained a license under s. 280.15 (2m) as a well driller.

(73) "Well Drilling" has the meaning designated in s. 280.01 (8), Stats.

Note: The statutory definition of "well drilling" is the industry and procedure employed in obtaining groundwater from a well by digging, boring, drilling, driving or other methods but not including the driving of points for the purpose of obtaining groundwater. It shall also include all construction work and installation of well casings in said well involved therein for the protection of such well water against pollution.

(74) "WPDES permit" means the Wisconsin pollutant discharge elimination system permit issued by the department under ch. 283, Stats., for the discharge of pollutants.

(75) "Year-round resident" means a resident who resides in the same living unit for six months per year or more.

(76) "Zone of influence" means the area of the cone of groundwater depression formed when the well pump is operating.

NR 811.03 Alternative requirements. (1) If the owner of a proposed reviewable project determines that compliance with the design requirements of this chapter is impracticable, the owner may submit in writing to the department prior to submission of final plans a request to use alternative criteria. This request shall contain the reasons that compliance with the design criteria is impracticable and alternative criteria for which department approval is sought and all pertinent facts, data, reports and studies supporting the proposed alternative.

(2) If the department determines that compliance with the design requirements of this chapter would be impracticable in any specific case, or that an alternative proposed has additional benefits with adequate safeguards, it may approve alternative criteria which are in substantial compliance with the requirements of this chapter.

NR 811.04 Drinking water standards. Where practical, the quality of the raw water source shall meet the primary maximum contaminant levels of ch. NR 809 and other applicable requirements of ch. NR 809 and this chapter without treatment. In all cases, the quality of finished water supplied to consumers at the point-of-entry to the distribution system shall meet the primary drinking water standards contained in ch. NR 809. Department approved water treatment shall be installed where necessary to meet this requirement.

NR 811.05 Underground placement of substances. The use of any well, drillhole or water system for the underground placement of any substance shall be prohibited unless it is a department approved activity necessary for the construction, rehabilitation or routine operation of the well or water system.

NR 811.06 Cross-connections and interconnections. Installation or replacement of cross-connections is prohibited. Plumbing back-siphonage, cross-connection and potability control regulations are provided in s. Comm 82.41; water system interconnections are prohibited except as provided in s. NR 811.07.

NR 811.07 Interconnections with other acceptable water sources. Interconnections between the public water supply system and another source of water are prohibited unless permitted by the department in individual cases. Approval of the department shall be obtained prior to making the interconnection.

SUBCHAPTER I, SUBMISSION OF PLANS

NR 811.08 General requirements. (1) PLANS AND SPECIFICATIONS REQUIRED. The owner of a community water supply system shall submit plans and specifications for all reviewable projects in accordance with ch. NR 108. Plans and specifications shall comply with or incorporate the general design and operating requirements in chs. NR 108, NR 810, and this chapter. Worksheets shall be included with all submittals for reviewable projects for which applicable worksheets are provided by the department.

(2) APPROVALS REQUIRED. Written department approval shall be obtained prior to starting construction for all reviewable projects as defined by s. NR 108.03 (1). The department may deny approval or grant a limited approval in cases where the requirements of this chapter are not met.

(3) PROJECTS REQUIRING DEPARTMENT APPROVAL BUT NOT REQUIRING SUBMITTAL BY A PROFESSIONAL ENGINEER. The requirements for the submittal of plans and specifications for reviewable projects are in ch. NR 108. The water supply owner or the owner's representative may submit reviewable projects to the department for approval without the seal of a professional engineer registered in Wisconsin for most operation and maintenance work and for all non-subdivision, other-than-municipal water systems as provided in s. NR 108.04 (2) (c) 2. Plans shall be submitted by a registered well driller or pump installer where applicable. Examples of projects not requiring a professional engineer's seal are pump replacement with similar equipment not affecting pumping capacity, test well construction when to be pumped at a rate of 70 gallons per minute or more for a minimum duration of 72 hours, unless the well is to be converted to a municipal or subdivision well, well reconstruction work, pump base reconstruction work, pumphouse pump discharge piping and appurtenance replacement, well rehabilitation work as described in ss. NR 811.12 (11) to (13), changing chemical type when the chemical feed equipment has been previously approved by the department; and painting or coating elevated water storage tank, reservoir, and hydro-pneumatic tank interiors.

NR 811.09 Specific requirements for waterworks, plans, specifications and engineering reports. (1) PLANS. (a) *General.* The detailed construction plans shall contain appropriate plan and profile views, elevations, sections and supplemental views which together with the specifications provide all necessary information for construction of the improvements. The elevations shall be based on sea level datum or local datum when a conversion to sea level datum is provided. Manufacturer's drawings are not acceptable as construction plans and will not be approved. Other state and local codes, including those of the department of commerce, the public service commission, and the department of health services, shall be consulted for other requirements where applicable.

(b) *Wells.* 1. A general plan shall be submitted which shows the location of the proposed well and its relation to proposed or existing water supply facilities. It shall show all features of sanitary significance which could have an effect on water quality. A separate well site plan shall be submitted which shows the property lines, contours or an appropriate number of spot elevations so that drainage can be determined, surficial features, structures, and any other relevant data. The well site plan shall also show the locations of all the observation wells, monitoring wells, test wells, treatment wells, or other wells to be constructed in relation to the well site and all permanent supply wells to be constructed on the site. A detailed well cross section shall be submitted which shows

the size and depths of drill holes and casings, depth of grout, and geological formations to be penetrated.

2. A copy of a well site investigation report shall be submitted as required in sub. (4) prior to or along with the plans submitted to the department for all final wells or applicable test wells as described in s. NR 811.12 (1) (g) 2. Based upon a review of the submitted well site investigation report, the department may perform an on-site inspection of the well site. Wellhead protection criteria conforming to s. NR 811.12 (6) shall be considered when siting wells. In addition, drawdown effects from the pumping or test pumping of test wells and final wells shall be considered during well siting and design. Information on possible drawdown effects on nearby private wells, public wells, or surface water bodies from pumping test wells or final wells and the means to be provided for measuring the effects shall be included with all submittals to the department where significant drawdown may occur or when required by the department.

3. Plans and specifications shall be submitted prior to the construction of any test well to be pumped at a rate of 70 gallons per minute or more for a duration of 72 hours or more. When it is known with reasonable certainty that any proposed test well will be converted to a final well the plans and specifications for the final well shall be submitted for department approval prior to construction of the test well.

(c) *Surface water intakes.* 1. 'Location plan.' Plans shall show the location of the intake pipeline and crib relative to the low lift pumping facility. The pipeline shall be referenced by bearing and distance, and the crib location shall be defined by latitude and longitude.

2. 'Detailed plans.' A profile of the proposed pipeline and crib shall be provided in addition to construction plans.

(d) *Treatment plants.* 1. 'Location plan.' The location plan shall show the location of the treatment plant in relation to the remainder of the water system and the water source or intake.

2. 'Layout.' The general layout plans shall include a contour map of the site, the site size, the size and location of plant structures, a schematic flow diagram indicating the various plant units, the piping layout, and a hydraulic profile at gravity plants.

3. 'Detailed plans.' The detailed construction plans shall include the location, dimensions, elevations and details of all existing and proposed plant units or equipment.

(e) *Chemical feed equipment.* The plan shall include a layout of the waterworks structure and piping. All of the following locations and details of the proposed equipment shall be included:

1. Descriptions and specifications of feed equipment, including anti-siphon devices and feed ranges.
2. Location of feeders, piping layout and points of application.
3. Storage and handling facilities.
4. Specifications for chemicals to be used.
5. Operating and control procedures.
6. Description of testing equipment and procedures.
7. Well or booster pump discharge rates and pressures.
8. Emergency eyewash and shower units.

(f) *Pumping facilities.* The plan shall show a general layout of the pumping equipment, pump bases, suction and discharge lines and related appurtenances.

(g) *Buildings.* The plans shall show the locations of all buildings and other site improvements in relation to the site property boundaries. The following details shall be included, where applicable:

1. Building dimensions, profiles, elevations, architectural details, plumbing details, HVAC details, security details, and other building appurtenances.

2. Property site contours.

3. The diameter and locations of all water mains, water service laterals, and appurtenances such as valves and hydrants.

4. The diameters and locations of all floor drains, building drain, building sewer, and POWTS components.

5. The location, elevations, construction details, and appurtenances of any on-site storm water retention or detention ponds.

6. Construction details for any non-water system related improvements to be located or constructed on the property.

(h) *Water mains.* 1. 'Location plan.' The plan shall show the proposed water main extensions in relation to existing facilities. A map, such as required by s. NR 810.26 (2), of the existing system or a portion thereof with the proposed extensions shown will satisfy this requirement.

2. 'Detailed plans.' The plans shall show the location of the proposed water main within the street right-of-way or easement; the location of other utilities, such as sanitary or storm sewers; elevations at intersections and hydrants or a profile of the proposed water main; location of proposed appurtenances; details or special features and connection to the existing system. Profiles showing the ground surface, the proposed water main, the proposed sanitary or storm sewer and rock depths are necessary when approval of a common trench is requested in high bedrock areas. The size of proposed and existing water mains shall also be shown.

3. 'Worksheet submittal.' Complete information as requested on any required worksheet shall be provided. The forms shall be completed for all water main projects including revisions to existing projects, upgrading of existing mains and resubmittals of projects previously approved by the department.

(i) *Storage facilities.* 1. 'Location plan.' The plan shall show the location of the proposed facility in relation to existing facilities.

2. 'Detailed plans.' Plans shall show contour lines at the site and complete construction details. Overflow elevations for existing and proposed facilities shall be noted.

(2) SPECIFICATIONS. Complete, detailed material and construction specifications shall be supplied for all phases of the proposed project. Specifications shall contain a program for keeping existing waterworks facilities in operation during construction of additional facilities so as to minimize interruptions of service. Specifications shall be included for controlling erosion on the construction site as a result of construction activity as specified in subch. V of ch. NR 151.

Note: Department approved Construction Site Erosion and Sediment Control Technical Standards can be found on the department's internet web site.

(3) ENGINEERING REPORT. An engineering report shall be submitted with all reviewable projects with the exception of water main extensions. The engineering report, required by s. NR 108.04 (2) (a), shall contain the controlling assumptions made and the factors used in determining the functional design of the proposed waterworks improvements as a whole and of each of the component parts or units. Where applicable, the report shall make reference to available regional, metropolitan, county or local water supply or water quality management plans and shall clearly indicate whether the proposed project is in conformance with the plans.

Note: It is recommended that the report also include an energy efficiency analysis.

(4) ENGINEERING REPORT REQUIREMENTS. The engineering report required under sub. (3) shall, in all cases, indicate the basis of design and shall include the following specific data, if applicable:

(a) *Description.* A brief description of the project and the need for improvements.

(b) *Location.* A description of the geographic location of the project, including reference to maps or exhibits and the location of existing facilities.

(c) *Topography.* A brief description of the topography of the general area and its relation to the area involved in the project.

(d) *Population.* Past census data and estimated future projection to the design year for the area involved in the project.

(e) *Design period.* The design period being used for sizing major system components, based on the population projection.

(f) *Investigations.* The results of any investigations, such as soil borings, test wells, pilot tests, water quality data, and fire flow tests.

(g) *Flooding.* Any areas of the project which are located within the floodway or floodplain as defined in ch. NR 116 shall conform to the requirements of that chapter.

(h) *Wetlands.* Any areas of the project which are to be located within a wetland, pass through a wetland or may impact a wetland shall be identified.

Note: Copies of the Wisconsin wetland inventory maps are available for inspection at the office of the department of natural resources and may be purchased through the department's internet web site. The department of natural resources is in the process of placing the wetland inventory maps on the department's internet web site.

(i) *Recommendations.* After discussion of alternatives, the recommendations for improvements shall be listed and a statement of the reasons for selection of the recommended alternative shall be provided. A discussion of estimated capital costs and estimated annual operation and maintenance costs shall be included.

(j) *Specific information.* The report shall, in addition, include specific information relevant to the type of project. The specific information required for each type of project is as follows:

1. 'Groundwater sources – Well site investigation reports.' A copy of a well site investigation report shall be submitted for department review and approval prior to the department approving the construction of a permanent well as required in sub. (1) (b) 2., or where there is reasonable certainty that the location of any test well will be the location of the permanent well. If no test well is to be constructed, site approval may be obtained simultaneously with department approval of plans for the final well. The investigation

shall include a field survey of the well site and the surrounding area. The investigation shall consist, at a minimum, of a map and report indicating:

a. The well location by quarter quarter section, township, range, county, latitude, and longitude.

b. The boundaries of the site and the location of the well on the site.

c. The topography of the site.

d. The regional flood elevation.

e. The past and present use of the proposed site.

f. The potential contamination sources within 1/2 mile of the well location summarized in a table or list including distance and direction from the well site and also shown on a map surrounding the well site. The table or list shall include an assessment of the potential for the contamination sources to impact a well constructed on the site and shall include information obtained by checking the department's database of contaminated properties, established in accordance with ss. 292.12 (3), 292.31 (1), and 292.57, Stats. and the department of commerce Storage Tank Database.

Note: The department's database of contaminated properties, established in accordance with ss. 292.12 (3), 292.31 (1), and 292.57, Stats., can be found on the department's Bureau for Remediation and Redevelopment internet web site. The Bureau for Remediation and Redevelopment Tracking System (BRRTS) is an on-line database that provides information on areas of known contaminated soil or groundwater and tracks the status of the cleanup actions. RR Sites Map is the program's geographic information system that provides a map-based system of contaminated properties in Wisconsin. Information that appears on the RR program's database and GIS applications can also be obtained by contacting the regional drinking water staff person responsible for the water system. The department can be contacted to obtain a copy of A Guide For Conducting Potential Contaminant Source Inventories For Wellhead Protection. The department of commerce Storage Tank Database Information can be found on the department of commerce internet web site.

g. The specific geologic formation or formations from which water will be pumped or withdrawn.

h. The test or final well construction details, or both, including the descending order and depths of the specific geologic formations to be penetrated.

i. The proposed test or final well pumping capacity in gallons per minute, or both, as applicable.

j. The direction of groundwater flow in the specific geologic formation or formations from which water will be pumped or withdrawn.

k. The zone of influence of the proposed well consisting of the distance to one foot of aquifer drawdown at the anticipated final pumping rate when pumpage of the well is assumed to be continuous without recharge for 30 days. The zone of influence shall be calculated using the Theis Method with or without computer modeling unless another method is approved by the department. The aquifer transmissivity (T) and storage (S) coefficients used shall be provided.

L. The recharge area for the well. The recharge area shall be calculated using the Uniform Flow Equation or a computer generated groundwater model unless another method is approved by the department.

Note: A copy of A Template For Preparing Wellhead Protection Plans For Municipal Wells, in which use of the Uniform Flow Equation is discussed, may be obtained from the department.

m. The results from any previous test wells including details of test well location and construction, water quality, pumping conditions including drawdown effects, if applicable, on other nearby wells or surface water bodies, geologic borings, and seismic, resistivity or other groundwater investigations.

n. The anticipated annual volume of water to be withdrawn and the compatibility with the existing water supply facilities.

o. The location and data from any piezometers.

p. The location of any nearby wetlands.

q. The distance and direction from the proposed well to the nearest existing well serving another water utility.

r. The distance and direction from the proposed well to the nearest neighboring private wells within 1,200 feet of the well site.

s. The location and distance to surface water and springs.

t. The locations of alternate well sites for the proposed well and other information such as test pumping or modeling as requested by the department in order to conduct a review under ch. NR 820 to justify the proposed well location if the well will be pumped at a rate equal to or greater than 70 gallons per minute and the department determines that the proposed well will be located within a groundwater protection area as defined in s. 281.34 (1) (a), Stats., or that operation of the well could result in significant adverse impacts to springs as defined in s. 281.34 (1) (f), Stats.

u. A summary evaluation of the site including advantages and disadvantages and the need for any possible water treatment.

2. 'Surface water sources.' To assess the water available at the source, the engineering report shall include a survey and study of the source, including obtaining samples from a number of locations and depths in order to select the best intake site. Sampling shall be sufficient to adequately determine the water quality characteristics. The report shall summarize information on hydrological data, such as safe yield, maximum and minimum water levels or flows, the quality of raw water with special emphasis on results of testing programs, fluctuation in water quality, including seasonal variations and effects, the presence of befouling organisms, and existing and future potential sources of contamination.

3. 'Water treatment or chemical addition processes.' The engineering report shall include a summary establishing the adequacy of the proposed processes for the treatment of the specific water under consideration. The report shall include any data from pilot or full scale plant studies and describe the method of disposal of any wastes and any possible effects on the environment.

4. 'Pumping facilities.' The engineering report shall include a description of the area to be served and the basis for design, including maximum and minimum discharge heads and flows, pump operational controls, and provisions for emergency operation.

5. 'Water storage facilities.' The engineering report shall include a description of the high to low static pressure range which the proposed facility will provide for existing and future service areas and the volume of domestic and fire storage required within the design period. The report shall explain how the proposed and existing facilities will meet

these requirements. The report shall also relate the compatibility of the proposed facilities with existing facilities and any changes that will have to be made to the existing facilities.

NR 811.10 Owner approval requirement. If an engineer or other agent submitting plans to the department is not an employee or otherwise retained by the owner of the water system, written acceptance of the final plans by the owner is required. A copy of the owner approval letter shall be included along with the submission of the plans to the department.

Note: As an example, if an engineer is retained by a developer to design water main extensions which will be connected to a municipal system and eventually be owned by the municipality, the plans must be accepted in writing by the municipality prior to the submission of plans to the department.

NR 811.11 Resident project representative. A resident project representative shall be designated by the water supply owner or by the agent retained by the owner. The resident project representative shall be knowledgeable regarding the proposed construction, and be able to competently determine whether or not the improvements are being constructed in accordance with the department approved plans and specifications and the conditions of the approval. The project representative shall be present on the work site as needed to assure proper construction and installation of the improvements. Hiring a resident project representative does not negate the owner's responsibility to assure proper construction and installation.

SUBCHAPTER II, SOURCE DEVELOPMENT – GROUNDWATER

NR 811.12 Wells. (1) GENERAL REQUIREMENTS. Any proposal which would result in a diversion from the Great Lakes basin requires department approval in accordance with s. 281.346, Stats. Wells shall be constructed in conformance with the following requirements:

(a) *Termination above the ground surface.*

1. All wells shall be terminated above the ground surface.

2. The grouted protective well casing or alternatively, the top of a pitless unit, shall be terminated above grade a minimum of 12 inches above the concrete floor of a pumphouse or enclosure.

3. The portion of the pump discharge piping for permanent wells that will contain the sampling faucets, water meter, valves and other appurtenances shall be exposed above the ground surface within a pumphouse building or enclosure that is secure, weatherproof, and has a concrete floor.

(b) *Watertight construction.* Permanent wells shall have watertight construction to such depth as may be required to exclude contamination. The depth shall be below the pumping water level except where exempted by the department on a case-by-case basis.

(c) *Grout seal.* Permanent wells shall have a grout seal surrounding the protective casing. The grout seal shall be a minimum of 1.5 inches in thickness to the depths specified in ss. NR 811.14, 811.18, 811.19, and 811.20.

(d) *Outer casings.*

1. All outer casings used in the construction of permanent wells shall be removed during or after the grouting process unless grouted in place with neat cement having a minimum thickness of 1.5 inches.

2. The grout level shall be retained above the bottom of the casing during removal of the casing.

3. Starter casings 10 feet in depth or less may be left in place provided that they are incorporated into the pump base in accordance with ss. NR 811.31 (1) and 811.32 (1).

(e) *Minimum protective casing.* All permanent wells shall have a minimum of 60 feet of grouted protective casing, wherever practicable. Continuous disinfection shall be provided for wells with less than 60 feet of grouted protective casing.

(f) *Bacteriologically safe water for drilling.* All wells shall be constructed using water from a known bacteriologically safe source that will not contaminate the aquifer. Untreated surface water or untested groundwater shall not be used. A detectable free chlorine residual shall be maintained in the well during drilling operations.

(g) *Test wells.*

1. Test wells shall be drilled for permanent wells proposed in unconsolidated formations to determine geologic formation information and water quality and quantity data.

2. Test wells to be converted to permanent wells or test wells to be pumped at a rate of 70 gallons per minute or more for a period of more than 72 hours shall be approved by the department prior to their construction.

3. The department may not require test wells for replacement or additional wells drilled on the same well site unless the geology is highly variable or in locations where the formation yield, cone of depression, and water quality are not known to a high degree of certainty.

4. The department may require a test well where water quality data or geologic data for consolidated formations is not available.

(h) *Flowing wells.*

1. Flowing wells shall be provided with a valve to control the flow. The valve shall be throttled as much as practicable to prevent the erosion of the confining bed and to prevent waste of water. The control valve shall be closed if the flow ceases.

2. Flow to waste piping shall be metal pipe welded to the protective well casing or pitless unit a minimum of 6 inches above the pumphouse floor. The piping shall extend horizontally through the concrete pump base and include a check valve and a shut-off valve on the portion of the piping located inside the building. The piping shall terminate outside the pumphouse with a screened downturned pipe elbow and a minimum two pipe diameter free air break over the top of a storm sewer inlet structure or other department approved location.

3. Every practicable effort shall be made to install the grouted casing below the confining bed.

(i) Materials used as drilling aids, such as drilling muds and foam or other aids shall be compounds approved by the department. Such materials shall be NSF/ANSI Standard 61 approved as required in s. NR 810.09 (5).

(j) The department may require additional or more stringent well construction requirements on a case by case basis when necessary to minimize the entrance of naturally occurring or synthetic contaminants into the well.

(2) WELL DRILLER REQUIREMENTS. All new wells shall be constructed and existing wells shall be reconstructed by a well driller licensed or registered by the state of Wisconsin under ch. 280, Stats. and ch. NR 146. A licensed well driller or a registered drilling rig operator shall be on-site during all well drilling, as defined in s. NR 811.02 (73).

(3) WELL CONSTRUCTION REPORTS. The well driller shall forward to the department, and send a copy to the owner, of a completed Wisconsin Well Construction Report within 30 days of the date of completion of a new well. The well driller shall forward to the department, and send a copy to the owner, of a revised Wisconsin Well Construction Report within 30 days of the date of completion of a reconstructed well. A well reconstruction report is required when a well is deepened, partially backfilled or when installing or removing well casings or screens.

Note: Chapter NR 146 contains the registration requirements for well drillers.

(4) INTERFERENCE BETWEEN COMMUNITY WATER SYSTEM WELLS. When the department determines that a proposed community water system well may have a substantial effect on the water levels in one or more wells owned by a neighboring water utility, the following procedure shall be followed:

(a) The department shall provide the owner of a utility well which may be affected by the proposed well with information on its location, proposed constructional features, proposed pumping rate and the anticipated volume of water to be withdrawn.

(b) If the potentially affected utility well owner wishes to object to the proposed community water system well, the owner shall inform the department in writing of the reasons for objection within 30 days of receipt of the information in par. (a).

(c) If notice of objection is filed and good cause is shown, the department may hold a public hearing at which all interested parties may present testimony to be used by the department in determining if a restriction shall be placed on the volume of water withdrawn from the proposed well or existing wells.

(5) WELL SITES. The suitability of a site for a well is dependent on geologic, hydrogeologic, and topographic conditions and possible sources of contamination. However, the following general requirements shall be met:

(a) *Well site dimensions.* For wells to serve municipal and subdivision other-than-municipal water systems, a lot or parcel of land shall be reserved for the construction of the well which has minimum dimensions of 100 feet by 100 feet. The well shall be located near the center of the lot or parcel. For non-subdivision other-than-municipal water system wells, the well shall be located a minimum of 50 feet from any property boundary. These dimensions may be modified by the department on a case-by-case basis where they are unnecessary or inadequate to protect water quality. Larger well sites should be considered where necessary to provide adequate wellhead protection. A deeper depth of grouted protective well casing may be required by the department when necessary to compensate for a smaller well site parcel or as a condition of approving a variance to a separation distance to a potential contamination source listed in par. (d).

(b) *Flood protection.* Wells may be constructed or replaced on sites in the floodplain outside of the floodway provided that the pumphouse floor is 2 feet or more above the regional flood elevation and there is year round dry land access to the pumphouse. No new well may be constructed and no existing well may be reconstructed on a site in a floodway. Wells shall be located in an area accessible during the entire year. Where

necessary, road improvements shall be installed to provide year round access. Wells shall be located on property owned by the water system owner or for which a long term easement or lease has been obtained. Access roads shall be on property owned by the water system owner or for which a long term easement or lease has been obtained.

Note: Refer to ch. NR 116 for floodplain and floodway criteria.

(c) *Well site investigation report submittal.* The owner or the owner's representative shall prepare a well site investigation report, as required by s. NR 811.09 (4) (j) 1., for each well site and submit the report to the department prior to or concurrent with the request for approval of a test well or a permanent well. The report shall be submitted on forms or in a format provided by the department and shall contain sufficient information to evaluate compliance with the requirements of this chapter.

(d) *Minimum separation from contamination sources.* The well shall be adequately separated from potential sources of contamination. Unless a hydrogeologic investigation indicates lesser separation distances would provide adequate protection of a well from contamination or department approved treatment is installed to address the potential contamination concerns, the minimum separation distances shall be:

1. Ten feet between a well and an emergency or standby power system that is operated by the same facility which operates the well and that has a double wall above ground storage tank with continuous electronic interstitial leakage monitoring. These facilities shall meet the installation requirements of s. Comm 10.260 and receive written approval from the department of commerce or its designated Local Program Operator under s. Comm 10.110.

2. Fifty feet between a well and a storm sewer main or a sanitary sewer main where the sanitary sewer main is constructed of water main class materials and joints. Gravity sanitary sewers shall be successfully air pressure tested in place. The air pressure test shall meet or exceed the requirements of the 4 psi low pressure air test for plastic gravity sewer lines found in the latest edition of Standard Specifications for Sewer & Water Construction in Wisconsin. Force mains shall be successfully pressure tested with water to meet the AWWA C600 pressure and leakage testing requirements for one hour at 125% of the pump shut-off head.

3. Two hundred feet between a well and any sanitary sewer main not constructed of water main class materials, sanitary sewer manhole**,** lift station, one or two family residential heating fuel oil underground storage tank or above ground storage tank or POWTS treatment tank or holding tank component and associated piping.

4. Three hundred feet between a well and any farm underground storage tank system or other underground storage tank system with double wall and with electronic interstitial monitoring for the system, which means the tank and any piping connected to it. These installations shall meet the most restrictive installation requirements of s. Comm 10.260 and receive written approval from the department of commerce or its designated Local Program Operator under s. Comm 10.110. These requirements apply to tanks containing gasoline, diesel, bio-diesel, ethanol, other alternative fuel, fuel oil, petroleum product, motor fuel, burner fuel, lubricant, waste oil, or hazardous substances.

5. Three hundred feet between a well and any farm above ground storage tank with double wall, or single wall tank with other secondary containment and under a canopy; other above ground storage tank system with double wall, or single wall tank with secondary containment and under a canopy and with electronic interstitial monitoring for

a double wall tank or electronic leakage monitoring for a single wall tank secondary containment structure. These installations shall meet the most restrictive installation requirements of s. Comm 10.260 and receive written approval from the department of commerce or its designated Local Program Operator under s. Comm 10.110. These requirements apply to tanks containing gasoline, diesel, bio-diesel, ethanol, other alternative fuel, fuel oil, petroleum product, motor fuel, burner fuel, lubricant, waste oil, or hazardous substances.

6. Four hundred feet between a well and a POWTS dispersal component with a design capacity of less than 12,000 gallons per day, a cemetery or a storm water retention or detention pond.

7. Six hundred feet between a well and any farm underground storage tank system or other underground storage tank system with double wall and with electronic interstitial monitoring for the system, which means the tank and any piping connected to it; any farm above ground storage tank with double wall, or single wall tank with other secondary containment and under a canopy or other above ground storage tank system with double wall, or single wall tank with secondary containment and under a canopy; and with electronic interstitial monitoring for a double wall tank or electronic leakage monitoring for a single wall tank secondary containment structure. These installations shall meet the standard double wall tank or single wall tank secondary containment installation requirements of s. Comm 10.260 and receive written approval from the department of commerce or its designated Local Program Operator under s. Comm 10.110. These requirements apply to tanks containing gasoline, diesel, bio-diesel, ethanol, other alternative fuel, fuel oil, petroleum product, motor fuel, burner fuel, lubricant, waste oil, or hazardous substances.

8. One thousand feet between a well and land application of municipal, commercial, or industrial waste; the boundaries of a landspreading facility for spreading of petroleum-contaminated soil regulated under ch. NR 718 while that facility is in operation; agricultural, industrial, commercial or municipal waste water treatment plant treatment units, lagoons, or storage structures; manure stacks or storage structures; POWTS dispersal component with a design capacity of 12,000 gallons per day or more.

9. Twelve hundred feet between a well and any solid waste storage, transportation, transfer, incineration, air curtain destructor, processing, wood burning, one time disposal or small demolition facility; sanitary landfill; any property with residual groundwater contamination that exceeds ch. NR 140 enforcement standards; coal storage area; salt or deicing material storage area; any single wall farm underground storage tank or single wall farm above ground storage tank or other single wall underground storage tank or above ground storage tank that has or has not received written approval from the department of commerce or its designated Local Program Operator under s. Comm 10.110 for a single wall tank installation. These requirements apply to tanks containing gasoline, diesel, bio-diesel, ethanol, other alternative fuel, fuel oil, petroleum product, motor fuel, burner fuel, lubricant, waste oil, or hazardous substances; and bulk pesticide or fertilizer handling or storage facilities.

Note: The department's database of contaminated properties, established in accordance with ss. 292.12 (3), 292.31 (1), and 292.57, Stats., can be found on the department's Bureau for Remediation and Redevelopment internet web site. The Bureau for Remediation and Redevelopment Tracking System (BRRTS) is an on-line database

that provides information on known contaminated soil or groundwater and tracks the status of the cleanup actions. RR Sites Map is the program's geographic information system that provides a map-based system of contaminated properties in Wisconsin. The department of commerce Storage Tank Database Information can be found at the department of commerce web site.

(e) *Well site inspection.* Well sites may be inspected by a representative of the department prior to approval of plans.

(f) *Ch. NR 820 compliance.* For wells with a pumping capacity of 70 gallons per minute or greater, the well location shall meet the applicable requirements of ch. NR 820.

(6) WELL HEAD PROTECTION PLAN. A well head protection plan shall be provided for all new wells for municipal water systems. The owner of the municipal water system or its agent shall develop the plan. No new municipal well may be placed into service until the department has approved the well head protection plan. The plan shall include all of the following:

(a) Identification of the groundwater flow direction.

(b) Identification of the zone of influence for the well consisting of the distance to one foot of aquifer drawdown at the anticipated final pumping rate when pumpage of the well is assumed to be continuous without recharge for 30 days. The zone of influence shall be calculated using the Theis Method with or without groundwater modeling unless another method is approved by the department.

(c) Identification of the recharge area for the well. The recharge area shall be calculated using the Uniform Flow Equation or be computer modeled unless another method is approved by the department.

Note: A copy of A Template For Preparing Well Head Protection Plans For Municipal Wells, in which use of the Uniform Flow Equation is discussed, may be obtained from the department.

(d) Identification of the potential contamination sources within 0.5 mile of the well location and an assessment of the potential for the existing contamination sources within the recharge area of the well to negatively impact the well water quality. The potential contamination sources shall be summarized in a table or list including distance and direction from the well site and shall also be shown on a map surrounding the well site. The table or list shall include information obtained by checking the department's database of contaminated properties, established in accordance with ss. 292.12 (3), 292.31 (1), and 292.57, Stats.

Note: The department's database of contaminated properties, established in accordance with ss. 292.12 (3), 292.31 (1), and 292.57, Stats., can be found on the department's Bureau for Remediation and Redevelopment internet web site. The Bureau for Remediation and Redevelopment Tracking System (BRRTS) is an on-line database that provides information on areas of known contaminated soil or groundwater and tracks the status of the cleanup actions. RR Sites Map is the program's geographic information system that provides a map-based system of contaminated properties in Wisconsin. Information that appears on the RR program's database and GIS applications can also be obtained by contacting the regional drinking water staff person responsible for the water system. A copy of A Guide For Conducting Potential Contaminant Source Inventories For Wellhead Protection may be obtained from the department.

(e) Establishment of a well head protection area for the proposed well. The well head protection area shall encompass, at a minimum, that portion of the recharge area equivalent to a 5 year time of travel to the well. The well head protection area may be determined by a hydrogeologic investigation.

(f) A public education program for well head protection.

(g) A water conservation program.

(h) A contingency plan for providing safe water and protecting the well from contamination based on the inventory and assessment of potential contamination sources.

(i) A management plan, which assesses alternatives for addressing potential contamination sources, describes the local ordinances, zoning requirements, monitoring program, and other local initiatives proposed within the well head protection area established in par. (e), and addresses maintaining the minimum contamination source separation distances established by well siting in sub. (5) (d).

Note: A copy of Example Wellhead Protection Ordinances may be obtained from the department's Bureau of Drinking Water and Groundwater located in Madison.

(j) The well head protection plan shall be labeled with the name and signature of the person who prepared the plan, the date that the plan was signed, and the name of the company or water system which the person represents. An owner approval letter shall be submitted when required in accordance with s. NR 811.10.

(7) CASING AND LINER PIPE FOR DRILLED WELLS. (a) The protective casing shall be new prime steel pipe produced to and meeting ASTM, A 53 Grades A or B, ASTM A 106; ASTM A 589 Type I, Grade A or B, Type II, Grade A or B; or API 5L specifications. Previously used or reclaimed pipe may not be used.

(b) Each length of casing shall be legibly marked in accordance with the ASTM or API marking specification and with s. NR 812.17 (2) (d). The protective casing shall have the minimum weights and thicknesses given in Table 1.

(c) Liner pipe installed to seal off a caving zone shall be new, unused, and non-reclaimed steel pipe and shall have the minimum weights and thicknesses given in Table No. 1.

(d) Outer casings can be unmarked, used, or reclaimed pipe but shall have the minimum weights and thicknesses given in Table No. 1.

(e) All casings and liner pipe shall have additional thickness and weight if the Table No. 1 standard thickness is insufficient to assure reasonable life expectancy or to withstand the forces to which they may be subjected.

(f) Casing and liner pipe shall be equipped with a drive shoe when driven and centering guides when set. The locations of all centering guides to be installed shall be shown on the plans or noted in the specifications, or both.

(g) Casing and liner pipe shall be assembled watertight by means of joints welded in accordance with the standard welding procedure specifications of s. NR 812.18 or by threaded couplings meeting or equivalent to the specifications listed in par. (a).

(h) For wells in which the protective casing or liner pipe to be grouted is suspended, the upper terminus of the protective casing or liner pipe shall be securely attached by welding steel bands to the outer casing or by other approved methods, and the grout shall be supported on a steel ring welded to the bottom of the protective casing or liner pipe or

on an approved packer attached to the bottom of the protective casing or liner pipe. The bottom of the protective casing or liner pipe may be flared out to meet this requirement.

Note: Copies of the forgoing specifications and standards are available for inspection at the central office of the department of natural resources and may be obtained for personal use from the American Society for Testing and Material (ASTM), 100 Barr Harbor Drive, PO Box C700, West Conshohocken, Pennsylvania 19148-2959, and the American Petroleum Institute (API), 1220 L Street NW, Washington DC 20005-4070.

Table No. 1

STEEL PIPE

SIZE (inches)	DIAMETER (inches)		THICKNESS (inches)	WEIGHT PER FOOT (pounds)	
	External	Internal		Plain Ends (calculated)	With Threads and Couplings (nominal)
6 id.	6.625	6.065	0.280	18.97	19.18
8	8.625	7.981	0.322	28.55	29.35
10	10.750	10.020	0.365	40.48	41.85
12	12.750	12.000	0.375	49.56	51.15
14 od.	14.000	13.250	0.375	54.57	57.00
16	16.000	15.250	0.375	62.58	65.30
18	18.000	17.250	0.375	70.59	73.00
20	20.000	19.250	0.375	78.60	81.00
22	22.000	21.000	0.500	114.81	
24	24.000	23.000	0.500	125.49	
26	26.000	25.000	0.500	136.17	
28	28.000	27.000	0.500	146.85	
30	30.000	29.000	0.500	157.53	
32	32.000	31.000	0.500	168.21	
34	34.000	33.000	0.500	178.89	
36	36.000	35.000	0.500	189.57	

(8) CONCRETE WALL CASING. Concrete wall casing shall meet all of the following requirements:

(a) Be used only in dug wells and collectors.

(b) Be reinforced and at least 6 inches thick.

(c) Be poured in one operation, if possible.

(d) Not have a construction joint within 10 feet of the original ground surface.

(9) PACKERS. Packers shall be of a material that will not impart taste, odors, toxic substances or bacterial contamination to the water in the well. Lead packers may not be used.

(10) SCREENS. Screens shall meet all of the following requirements:

(a) Be constructed of stainless steel which will not be damaged by chemical action of groundwater, disinfection chemicals, or future cleaning operations.

(b) Have size of openings based on sieve analysis of the aquifer and gravel pack materials.

(c) Be designed to have an entrance velocity that does not exceed 0.1 feet per second under normal operating conditions.

(d) Be installed and have pumping equipment designed so that exposure of the screen above the pumping level will not occur during normal operation.

(e) Be provided with a bottom plate of the same material as the screen.

(11) BLASTING. Approval shall be obtained from the department prior to blasting within a well. Information regarding the procedure, number, size and location of charges shall be submitted to the department in writing.

(a) Blasting shall be conducted under the supervision of a licensed well driller and a blaster licensed by the department of commerce under s. Comm 5.20.

(b) No blasting may occur within 100 feet of the grouted protective casing unless specific information is submitted for department approval that justifies the use of low strength prima-cord or charges between 50 and 100 feet of the grouted protective casing if necessary to maintain the production capacity or water quality of a well with a limited length of open drillhole.

(c) All material dislodged during the blasting shall be removed from the well.

(d) Proper safety measures shall be employed to protect the workers and surrounding structures.

(e) The department's regional drinking water staff person shall be given at least 48 hours notice prior to the date and time of the proposed blasting work.

(f) Following the completion of the blasting procedure, the well shall be thoroughly disinfected and pumped to waste, and safe bacteriological water samples shall be collected according to the requirements of s. NR 810.09 (4).

(g) The owner or an authorized representative shall submit a written report to the department within 30 days of the date of completion of the blasting and subsequent pumping of the well that includes the static and pumping water levels, gallon per minute pumping rate and specific capacity of the well both before and after the blasting, and the results of any testing for chemical or physical properties for which the well may have been blasted, if applicable.

(12) CHEMICAL CONDITIONING. Approval shall be obtained from the department prior to chemical conditioning of a well. Information regarding the method proposed,

equipment, chemicals, testing for residual chemicals, disposal of waste and inhibitors to be used shall be submitted to the department in writing.

(a) The department's regional drinking water staff person shall be given at least 48 hours prior notice prior to the date and time of the proposed chemical conditioning work.

(b) Chemical conditioning, with the exception of batch chlorination, shall be performed by or under the supervision of a licensed well driller.

(c) All chemicals used in conditioning shall be NSF/ANSI Standard 60 approved for use in potable water as required per ss. NR 810.09 (1) (c) unless an alternative chemical is approved by the department.

(d) Acid treatment shall include pH monitoring of nearby private or public wells, use of an inhibitor to protect the metal portions of the well and pump, complete removal of the acid from the well, neutralization of the spent acid, and proper disposal of the spent acid.

(e) The resident project representative shall closely supervise the discharge of chlorinated water. In no case may water with a measurable total chlorine residual content be discharged to a surface water. Suitable barriers, aeration or chemical dechlorination shall be provided when discharging chlorinated water to a surface water or a storm sewer connected to a surface water to ensure the water discharged does not contain a measurable chlorine residual.

(f) Following the completion of the chemical conditioning procedure, the well shall be thoroughly disinfected, pumped to waste and safe bacteriological water samples shall be collected according to the requirements of s. NR 810.09 (4).

(g) The owner or an authorized representative shall submit a written report to the department within 30 days of the date of completion of the chemical conditioning and subsequent pumping of the well that includes the static and pumping water levels, gallon per minute pumping rate and specific capacity of the well both before and after chemical conditioning, and the results of any testing for chemical or physical properties for which the well may have been chemically conditioned, if applicable.

(13) OTHER METHODS OF WELL RECONDITIONING. Approval shall be obtained from the department prior to performing any other type of reconditioning procedure, including hydrofracturing and impulse generation techniques. The requester shall submit written information regarding the procedure, the equipment, materials, chemicals and pressures to be used, and the disposal of waste to the department for approval.

(a) *Hydrofracturing.* Hydrofracturing procedures shall meet the following requirements:

1. The department's regional drinking water staff person shall be given at least 48 hours notice prior to the date and time of the proposed hydrofracturing work.

2. Hydrofracturing shall be performed by or under the supervision of a licensed well driller.

3. Clean washed inert, nontoxic material such as sand may be added to the water for the purpose of holding the joints and fractures open after the pressure is reduced.

4. When a well is to be hydrofractured within 100 feet of any existing bedrock well, the well driller shall notify the existing well owner or owners and the department's regional drinking water staff person of the forthcoming hydrofracturing operation at least 48 hours prior to the commencement of the hydrofracturing operation.

5. The upper packer may not be placed at a depth closer than 20 feet below the bottom of the casing.

6. Following the completion of the hydrofracturing procedure, the well shall be thoroughly disinfected, pumped to waste, and safe bacteriological water samples shall be collected according to the requirements of s. NR 810.09 (4).

7. The owner or an authorized representative shall submit a written report to the department within 30 days of the date of completion of the hydrofracturing and subsequent pumping of the well that includes the static and pumping water levels, gallon per minute pumping rate and specific capacity of the well both before and after the hydrofracturing, and the results of any testing for chemical or physical properties for which the well may have been hydrofractured, if applicable.

(b) *Impulse generation.* Impulse generation procedures shall meet the following requirements:

1. The department's regional drinking water staff person shall be given at least 48 hours notice prior to the date and time of the impulse generation work.

2. Impulse generation procedures shall be performed by or under the supervision of a licensed well driller.

3. A report shall be submitted to the department that identifies the impulse method to be used, the means of generating the impulse, the number of passes, the depths in the open drillhole or well screen that the procedure will be started and stopped, the psi strength of each impulse, and the number of impulses per foot. The report shall also include information on all the gases to be used and details of any chemical addition to be performed along with the impulse generation procedures, including the chemicals to be used, the reason for using the chemicals, the strength of each chemical as applied, the means to be used to inject the chemicals, and how the chemicals will be neutralized and disposed of. All chemicals used shall have NSF/ANSI Standard 60 approved for use in potable water as required per s. NR 810.09 (1) (c).

4. Impulse strength shall be maintained low enough to prevent structural damage to well casings, grout, and screens.

5. Following the completion of the impulse generation work, the well shall be thoroughly disinfected, pumped to waste, and safe bacteriological water samples shall be collected according to the requirements of s. NR 810.09 (4).

6. The owner or an authorized representative shall submit a written report to the department within 30 days of the date of completion of the impulse generation and subsequent pumping of the well that includes the static and pumping water levels, gallon per minute pumping rate and specific capacity of the well both before and after the impulse generation, and the results of any testing for chemical or physical properties for which the well may have been treated with impulse generation, if applicable.

(14) GROUTING REQUIREMENTS. (a) *Grout types and specifications.* 1. Neat cement grout shall be ASTM C150, Type I or API-10A, Class A Portland cement and water from a known bacteriologically safe and uncontaminated source with not more than 6 gallons of water per sack (94 lbs.) of cement. A mud balance shall be used to measure the grout density. Additives, including bentonite, to increase fluidity, reduce shrinkage or control time of set may be used only with prior department approval. No more than 4.7 pounds of powdered bentonite, a maximum of 5%, may be added to each 94-pound sack of cement. When bentonite is added, the volume of water shall be increased. When

bentonite is added, a pressurized mud balance shall be used to measure the grout density. Bentonite mixed with neat cement grout shall comply with Table No. 2.

Table No. 2
ALLOWABLE NEAT CEMENT – BENTONITE GROUT MIXTURES

% bentonite added per 94-lb sack of cement	Maximum gal of water per 94-lb of cement	Minimum density of bentonite/grout mix in lbs/gal	Volume of bentonite/grout mix in ft^3/sack of cement
0% (0.00 lbs)	6.00	15.02	1.28
1% (0.94 lbs)	6.04	15.00	1.29
2% (1.88 lbs)	7.05	14.40	1.43
3% (2.82 lbs)	7.47	14.20	1.49
4% (3.76 lbs)	7.93	14.00	1.56
5% (4.70 lbs)	8.42	13.80	1.63

(Bentonite table information provided by the Halliburton Co.)

2. Sand cement grout may be used for annular openings greater than 3 inches. The mixture may not exceed 2 parts by weight of sand to one part of ASTM C150, Type 1 or API-10A, Class A Portland cement and not more than 6 gallons of water from a known bacteriologically safe and uncontaminated source to each 94-pound sack of cement.

3. Concrete grout may be used for annular openings greater than 6 inches. The concrete shall contain not less than 6 sacks of cement per cubic yard and not more than 6 gallons of water from a known bacteriologically safe uncontaminated source to each 94-pound sack of cement. The gravel size may not exceed 0.75 inch. The volumetric ratio of either gravel or sand to cement may not exceed 2.5 parts to one part. Wisconsin department of transportation grade A concrete is also acceptable.

(b) *Grouting procedures.* 1. All grout shall be placed from the bottom of the annular opening to the surface in one continuous operation. Grouting methods that involve forcing a measured quantity of grout down the inner casing by a plug, such as the Halliburton method, shall not be used. When a conductor pipe in the annular opening is used, the conductor pipe shall meet the material requirements of subd. 8. and shall be submerged in the grout during the entire operation. For grout depths in excess of 100 feet, a pump shall be used to inject the grout.

2. A sufficient annular opening shall be provided to permit a minimum of 1.5 inches of grout around the protective casing, grouted liner pipe, or outer casing when it is intended to grout the outer casing in place, including couplings, if used.

3. Any materials used as drilling aids shall be removed from the annular opening prior to grouting.

4. Prior to grouting through creviced formations, bentonite or similar approved materials shall be added to the annular opening in the manner indicated for grouting and circulated until the bentonite or other approved material flows to the ground surface.

5. Grout shall be allowed to overflow from the annular opening until such time as the density is the same as that of the grout being placed. The specifications shall outline the

method to be used to check the grout density and equipment shall be available on site to determine grout density.

6. Standby grouting equipment for grouting annular openings, including a backup grout pump and tremie pipe meeting the material requirements of subd. 8., shall be on site during the grouting of all wells.

7. The grout level shall be maintained above the bottom of any outer casing during the withdrawal procedure.

8. Grout conductor, or tremie, pipes shall be metal pipe or a rubber-covered, fiber or steel braided, reinforced hose with a minimum pressure rating of 300 psi. Plastic pipe, including PVC pipe, shall not be used as a grout conductor pipe.

9. The conductor pipe shall be completely withdrawn from the well prior to flushing excess grout from the conductor pipe when grouting down the annular space or shall be disconnected from the grout shoe or street elbow prior to flushing excess grout when grouting within the casing.

(c) *Centering guides.* Centering guides shall be installed on the protective casing in a manner to permit unobstructed flow and uniform thickness of grout within the annular space.

(d) *Grout curing.* Drilling operations or other work in the well, including development, may not be performed within 72 hours after the grouting of casings or liners. If the department approves the use of quick-setting cement, this period may be reduced to 24 hours. Use of quick setting cement shall be clearly indicated in the specifications submitted to the department.

(15) PLUMBNESS AND ALIGNMENT REQUIREMENTS. (a) Every well constructed in rock and all screened wells greater than 100 feet in depth shall be tested for plumbness and alignment by the method outlined in the current AWWA Standard A100 or by an equivalent method. The test method shall be clearly stated in the specifications. A copy of the AWWA standard is available for inspection at the central office of the department of natural resources and may be obtained for personal use from the American Water Works Association, 6666 West Quincy Ave., Denver, Colorado 80235-3098.

(b) Variance from the vertical of two-thirds the smallest inside diameter of that part of the well being tested per 100 feet of depth to the depth of the pump setting plus 25% may not be exceeded. Also, the well shall allow free passage of a 40-foot section of pipe or a dummy to the depth of the pump setting plus 25%. The outside diameter of the pipe or dummy used may not be more than 1/2 inch smaller than the diameter being tested.

(c) The department will not approve installation of well pumps in wells with kinks and bends which prevent setting a line shaft vertical turbine pump to the desired pump setting plus 25% unless the owner accepts the installation in writing.

(d) A summary and evaluation of the test results shall be submitted to the department prior to permanent pump approval for municipal wells and prior to the department approving the well to be placed in service for other-than-municipal community public wells.

(16) YIELD AND DRAWDOWN TEST. (a) A yield and drawdown test is required. The method to be used shall be clearly indicated in the plans and specifications.

(b) The yield and drawdown test shall be performed on every municipal or subdivision well for a period of at least 12 consecutive hours. For non-subdivision other-than-municipal water system wells, the yield and drawdown test shall be performed for a

period of at least 4 consecutive hours. In any case, the test shall be performed at a rate no less than the anticipated pumping capacity and for the duration necessary for the water level to stabilize at the anticipated pumping capacity.

(c) The test shall include pumping a minimum of 4 hours at a rate equal to the capacity anticipated for the permanent well pump.

(d) Water depth measurements shall be made at a frequency sufficient to evaluate the production efficiency and recovery rate of the well.

(e) All of the following data regarding the yield and drawdown test shall be submitted to the department:

1. Date and time the test was started;
2. Static water level immediately prior to starting the test;
3. Gallon per minute pumping rate;
4. Drawdown in feet during the test;
5. Date and time the pumping water level was measured;
6. Specific capacity in gpm/ft;
7. Recovery water levels including date and time measured;
8. Depth of pump setting;
9. Drawdown and recovery measurements from any observation or monitoring wells monitored during the test pumping including date and time measured;
10. Elevation of the reference point of measurement of the water level data at each monitoring point.

(f) In addition, representative samples of the well water shall be collected as required by subs. (19) and (20) and the laboratory results shall be submitted directly to the department in a department approved electronic format. The laboratory results of any exploratory or investigative water quality analyses shall be submitted to the department on paper lab forms.

(17) GEOLOGICAL DATA. (a) Formation samples shall be collected from all new test wells and final wells and from deepening of existing wells at 5-foot intervals and at each pronounced change in geologic formation. The formation samples shall be submitted to the Wisconsin State Geological and Natural History Survey, 3817 Mineral Point Road, Madison, Wisconsin 53705, in collection bags provided by the survey or in equivalent plastic bags. The formation depths sampled shall be clearly and permanently marked on each bag.

(b) Geological data shall be recorded on the completed Well Construction Report form submitted to the department.

(18) CAPPING REQUIREMENTS. (a) Wells in which no pump is installed shall be capped by welding a steel plate to the top of the casing to form a watertight and airtight seal.

(b) During construction, a temporary means of capping or covering the well shall be provided to prevent debris or any contaminants from entering the well or any annular space.

(19) BACTERIOLOGICAL QUALITY. Every new, modified, or reconditioned groundwater source shall be disinfected during or after installation of the pumping equipment. Representative samples for bacteriological analysis shall be collected as required in s. NR 810.09 (4).

(20) CHEMICAL QUALITY. Every new well shall be sampled for chemical quality. Reconditioned or reconstructed wells shall be sampled for chemical quality in cases where changes in water quality may occur. The samples shall be representative of the well water and collected and analyzed for the parameters indicated in the department's approval letter for the well construction, reconditioning or reconstruction. The samples shall be collected near the end of the test pumping period after the well construction, reconditioning, or reconstruction has been completed and where applicable, the well developed. Where not existing, a smooth end sampling faucet shall be installed on the test pump discharge piping at a location suitable for the collection of water samples for volatile parameters and a suitable throttling device shall be provided on the pump discharge piping to facilitate sample collection. The samples shall be submitted to a laboratory certified by the State of Wisconsin. Prior to collection of the samples, the department shall be provided with a detailed description of the sampling protocol for each parameter. Wells that do not meet the primary drinking water standards of ch. NR 809 may not be placed into service unless adequate treatment is provided in accordance with. s. NR 811.04.

(21) OBSERVATION WELLS AND TEST WELLS. (a) Observation wells, monitoring wells, test wells, treatment wells or other wells constructed as part of the water system shall be constructed in accordance with the requirements of this chapter for permanent community wells if they are to remain in service after completion of construction of the community well and if they are located on the well site. When taken out of service these wells shall be abandoned in accordance with s. NR 811.13. Temporary or permanent observation wells, monitoring wells, test wells, treatment wells, or other wells constructed off the well site shall meet the construction and abandonment requirements of chs. NR 141, NR 812, or this chapter.

(b) The wells shall be protected and secured at the upper terminal to preclude entrance of foreign material and minimize the potential for vandalism. The wells to remain in service shall be provided with locking covers.

(c) Specifications documenting the methods and materials for the temporary abandonment of test wells or test borings to be converted into final wells shall be submitted to the department for review and approval.

NR 811.13 Abandonment of wells. (1) CRITERIA FOR ABANDONMENT. The owner shall permanently abandon all unused permanent wells, test wells, and monitoring wells for permanent wells or test wells unless the department agrees to the delayed abandonment of the well as part of an extended well abandonment agreement. Wells shall be abandoned in accordance with the following criteria:

(a) Test wells and monitoring wells constructed as part of the test well or permanent well construction and test pumping evaluation processes shall be permanently abandoned prior to placing the permanent well in service unless the department approves the wells to remain in service in accordance with the requirements of s. NR 811.12 (21).

(b) Permanent wells with one or more water quality parameters exceeding a primary drinking water standard contained in ch. NR 809 shall be permanently abandoned unless department approval is obtained to continue the well in service and only if department approved water treatment is installed to provide point-of-entry water quality compliance or an extended well abandonment agreement is obtained from the department in conformance with s. NR 810.22. The department shall be contacted and written

department approval shall be obtained for the abandonment of contaminated wells where the department deems it necessary to require more stringent abandonment requirements in order to protect lower aquifers from additional contamination.

(c) The department may allow existing permanent wells that are not constructed in accordance with the minimum requirements of this chapter to remain in service if the well water quality continues to meet all of the primary drinking water standards contained in ch. NR 809 or if department-approved water treatment is installed to provide point-of-entry water quality compliance. All ungrouted municipal wells shall be immediately reconstructed by grouting in a liner casing to a depth approved by the department or the well shall be taken out of service and permanently abandoned.

(2) QUALIFICATIONS OF PERSONS ABANDONING WELLS. All wells shall be permanently abandoned by persons who meet the following qualifications:

(a) For wells located within a municipal water system, the person shall be a licensed well driller, a licensed pump installer, a water system operator certified under s. 281.17 (3), Stats., working for the municipal water system, or a person under the supervision of a licensed well driller, licensed pump installer, or a water system operator certified under s. 281.17 (3), Stats., working for the municipal water system.

(b) For wells not located within a municipal water system, the person shall be a licensed well driller, a licensed pump installer or a person under the supervision of a licensed well driller or licensed pump installer.

(3) TEMPORARY ABANDONMENT. When a well is temporarily removed from service, the top of the well casing shall be sealed with a watertight threaded or welded cap. The well shall be permanently abandoned no later than 5 years after the well is temporarily abandoned. The department may enter into a written extended well abandonment agreement with the well owner in accordance with s. NR 810.22 to allow an unused or standby well to remain operational for more than 5 years after the well is temporarily abandoned.

(4) PRE-ABANDONMENT REQUIREMENTS. (a) All debris, pumps, piping, ungrouted liner pipe that can be removed, inner ungrouted casings and well screens, and any other obstruction known to be in the well shall be removed if possible before the well is permanently abandoned.

(b) Well casing pipe may be removed from a well to be abandoned if the end of the pipe remains in the well sealing material as the pipe is pulled from the well.

(c) Wells that have uncertain construction details shall be televised prior to abandonment if required by the department to allow for a proper well abandonment.

(d) All casings and liner pipes located within ungrouted annular spaces and that cannot be removed from a well prior to abandonment shall either be shot or ripped in place prior to abandonment of the well. The following minimum requirements shall be met:

1. The casing shall either be perforated using projectiles fired perpendicular and completely through the casing or liner pipe or shall be vertically ripped.

2. There shall be four shots or one rip per each 5 feet of casing.

3. Each shot shall be a minimum of 0.4 inches in diameter. Each rip shall have a minimum width of 0.25 inches and a minimum length of 12 inches.

4. Each successive shot or rip shall be rotated by 90 degrees.

5. The portion of the well with a casing or liner pipe to be shot or ripped shall be completely filled inside and outside by pressure grouting with neat cement from the inside out and from the bottom up in accordance with s. NR 811.12 (14).

(5) ABANDONMENT MATERIALS AND LIMITATIONS. All wells shall be abandoned using the following materials:

(a) Neat cement grout, sand-cement grout, or concrete meeting the specifications in s. NR 811.12 (14) (a). Powdered bentonite shall not be added to neat cement grout.

(b) Department approved slow-hydrating bentonite chips with the following limitations:

1. The well diameter shall be 4 inches or larger.
2. The depth of chip placement shall not exceed 500 feet.
3. The depth of standing water in the well shall not exceed 350 feet.
4. Fine particles and dust contained in the bags of bentonite chips shall be prevented from entering the well by allowing the chips to tumble under their own weight down a coarse mesh screen into the well. The chips shall be poured across the screen and into the well at a rate not to exceed emptying the bag in 3 minutes.
5. The depth of chips shall be monitored a minimum of once every calculated 50 feet to monitor for bridging of chips. Any chip bridges shall be removed.
6. Water from a clean, known bacteriologically safe source shall be poured down the well on a continuous basis as the chips are being introduced into the well in order to hydrate all of the chips. Water shall be continuously introduced until the water level rises to the top of the well casing and stays there.

(c) Pea gravel that is round, washed to be free of sand and other fine materials, disinfected and having a maximum diameter of 0.375 inches, may be poured into a well without the use of a conductor pipe if the well is sounded at 50-foot intervals to ensure that bridging of the gravel does not occur.

(6) GENERAL ABANDONMENT REQUIREMENTS. Abandonment methods shall meet the following requirements:

(a) All wells shall be filled from the bottom of the well up to the ground surface using approved materials unless it is necessary to terminate the abandonment below the ground surface to accommodate construction over the well. Well casings and abandonment materials may be terminated as much as 3 feet below the ground surface or to a depth below any future building foundation to accommodate construction over the well.

(b) The bottom end of the conductor pipe shall be submerged in the sealing material at all times.

(c) Sealing materials shall be placed by use of a conductor pipe or by means of a dump bailer except when approved bentonite chips or pea gravel are used. Bentonite chips may be poured into the well in accordance with sub. (5) (b). Pea gravel may be poured into the well in accordance with sub. (5) (c). Conductor piping used for pressure methods shall meet the requirements of s. NR 811.12 (14) (b) 8. for well grouting. Conductor piping for non-pressure methods shall be one of the following:

1. Metal pipe.
2. Rubber-covered hose reinforced with braided fiber or steel and rated at least 300 psi.
3. For use at depths less than 100 feet, thermoplastic pipe rated for at least 100 psi, including any of the following:

a. Polyvinyl chloride (PVC).
b. Chlorinated polyvinyl chloride (CPVC).
c. Polyethylene (PE).
d. Polybutylene (PB).
e. Acrylonitrile butadiene styrene (ABS).

(7) SPECIAL ABANDONMENT REQUIREMENTS. To permanently abandon a well, the owner shall have a person who meets the qualifications of sub. (2) fill and seal the well to prevent it from acting as a channel for the vertical movement of contamination or groundwater, by the following applicable method:

(a) *Monitoring wells.* Monitoring wells constructed to ch. NR 141 requirements shall be permanently abandoned in accordance with ch. NR 141 requirements.

(b) *Flowing wells.* For flowing wells, the flow shall be confined and the well shall be filled in accordance with par. (c), (d), or (e) or sealed in accordance with sub. (6) using neat cement grout applied by a pressure method.

(c) *Drift or other unconsolidated wells.* For drift or other unconsolidated wells, the well shall be completely filled from the bottom up with concrete, sand cement grout, neat cement, or approved slow-hydrating bentonite chips. Sealing materials shall meet the requirements of sub. (5). An attempt shall be made to remove any inner ungrouted well casings and screens from gravel-pack wells prior to filling. If the well casings and screens cannot be removed, an attempt shall be made to remove as much gravel pack as possible using air or water or both jetting techniques and the interior and exterior of the ungrouted casings and screens shall then be sealed from the bottom up in accordance with sub. (6) using neat cement applied by a pressure method.

(d) *Bedrock formation wells.* Wells completed in bedrock formations shall be completely filled from the bottom up with concrete, sand-cement, neat cement, or approved slow-hydrating bentonite chips. Sealing materials shall meet the requirements of sub. (5). As an alternative for uncontaminated bedrock wells deeper than 250 feet or for wells cased and grouted through the Maquoketa Shale formation, chlorinated, sand-free pea gravel may be used to fill the open drillhole from the bottom of the well up to the 250-foot depth or to a depth 20 feet below the bottom of the protective casing, whichever is deeper. Additionally, minimum 40-foot thick plugs of sealing materials meeting the requirements of sub. (5) shall be centered at the top of the uppermost Cambrian Sandstone formation and at the top of the Eau Claire formation where these formations are open in the drillhole. The department shall be contacted for specific abandonment requirements where the top or the bottom of the Maquoketa Shale formation is exposed in the open drillhole.

(e) *Dug and bored wells.* The cover and the top curbing or concrete wall shall be removed to a depth of 5 feet below grade for dug or bored wells. Concrete or rock curbing materials may be caved into the drillhole as the well is being sealed only if performed in a manner to prevent bridging.

1. If constructed in unconsolidated formations, the well shall be filled from the bottom up using clean clay or silt, clean native soil, concrete, sand-cement, neat cement, or approved slow-hydrating bentonite chips or a combination of the above. Sealing materials shall meet the requirements of sub. (5).

2. If constructed partially or completely into bedrock, the well shall be filled from the bottom up to the ground surface with concrete, sand-cement, neat cement, approved

slow-hydrating bentonite chips or a combination of the above except that if bedrock is encountered below the ground surface, these materials shall be placed to a point at least 2 feet above the top of the bedrock. The remainder of the well may be abandoned with any of the materials listed in subd. 1. Sealing materials shall meet the requirements of sub. (5).

3. Dug or bored wells 18 inches in diameter and smaller shall be filled by means of a conductor pipe, or tremie pipe, except when slow-hydrating bentonite chips are used as specified in sub. (5) (b) or when clean clay or silt or clean native soil is used and the dug or bored well is 25 feet deep or less.

(8) ABANDONMENT REPORTS. The person who abandoned the well shall file an abandonment report with the department, on forms provided by the department, within 30 days after the completion of the well abandonment. The report shall be completely filled out in accordance with the information known and shall include complete information on the depths and types of sealing materials used. Well drillers and pump installers shall report to the department any unused or unabandoned wells on the property of which they have knowledge.

NR 811.14 Special requirements for wells developed in unconsolidated formations. (1) CASED AND GROUTED DEPTH. The cased and grouted depth for screened wells in unconsolidated formations shall be dependent on the controlling geologic conditions. Where practical, the grouted casing shall extend to at least 5 feet below the normal pumping water level and to within 5 feet of the top of the screen unless the grout depth is at least 60 feet.

(2) TREATMENT. Additional treatment shall be provided for wells with less than 60 feet of grouted well casing.

(a) Continuous disinfection shall be provided for wells with less than 60 feet of grouted well casing.

(b) Additional detention time and treatment shall be provided when the department determines that additional protection is necessary.

(c) Wells with less than 30 feet of grouted well casing shall be provided with treatment meeting the groundwater under the direct influence of surface water requirements found in ss. NR 810.30, 810.33, 810.34, 810.35, 810.36, and 810.39.

(3) CASING AND GROUTING THROUGH CLAY OR HARDPAN. If clay or hardpan is encountered above the formation to be developed, the protective casing and grout shall extend through the materials, but any outer casing shall be withdrawn at least 5 feet above the clay or hardpan during grouting.

(4) GRAVEL PACK. If the well is gravel packed, the gravel shall be acid resistant and free of foreign material, properly sized, washed and disinfected prior to or during placement.

(5) GROUT SEAL. A sand or bentonite seal to prevent leakage of grout into the gravel pack or screen shall be provided. The seal shall be no more than 2 feet thick.

(6) GRAVEL REFILL AND OBSERVATION PIPES. Gravel refill pipes and observation pipes, when used, shall be surrounded by a minimum of 1.5 inches of grout if installed in the grouted annular opening. Observation pipes installed between the inner and the protective casing may be plastic. Pipes shall be incorporated into the concrete pump foundation to a point at least 4 inches above the floor, and shall terminate with a threaded cap at least 12 inches above the pumphouse floor.

NR 811.15 Special requirements for collector wells. (1) Continuous disinfection and adequate detention time shall be provided for radial collectors.

(2) Department approval of the well site shall be obtained in accordance with s. NR 811.09 (4) (j) 1. prior to conducting any intensive investigation at the well site.

(3) The area around the collector laterals shall be under the control of the supplier of water for a distance approved by the department.

(4) The location of all caisson construction joints and porthole assemblies shall be indicated on the plans.

(5) The caisson wall shall be constructed of reinforced concrete as provided in s. NR 811.12 (8). An approved water stop shall be installed between each lift. A final water stop or gasket shall be installed between the base of the pumphouse floor and the top of the caisson. All water used in the construction of the collector shall be from a known bacteriologically safe and uncontaminated source.

(6) Provisions shall be made to assure minimum vertical rise of the caisson due to potential buoyancy concerns.

(7) The top of the caisson shall be covered with a watertight concrete floor, and all openings in the floor shall be curbed and have overlapping covers to protect against the entrance of foreign material. The caisson shall be vented through a vent pipe installed through the floor in accordance with the requirements of s. NR 811.64 (8).

(8) Pump discharge pipes may not be placed through caisson walls.

(9) Pumphouses constructed on top of the caisson shall meet the construction requirements of subchs. IV and V. The floor of any pumphouse shall be supported by concrete walls that have frost footings.

NR 811.16 Special requirements for dug wells and springs. (1) The department may approve dug wells and springs only when it is not feasible to develop a drilled well.

(2) Dug wells and springs are considered to be groundwater under the direct influence of surface water and shall be provided with treatment meeting the requirements of ss. NR 810.30, 810.33, 810.34, 810.35, 810.36, and 810.39.

(3) Dug wells and springs shall be housed in a permanent watertight concrete structure which terminates a minimum of 24 inches above the ground surface, which prevents the entry of surface water, and meets the construction requirements of s. NR 811.12 (8).

(4) Discharge piping for dug wells and springs may not be placed through the sides of the concrete casing.

(5) The supplier of water shall have control of the area around the dug well or spring for a distance approved by the department.

(6) Dug well and spring collector pumping stations shall have a watertight concrete floor. All openings in the floor shall be curbed and protected against the entrance of foreign material. The entrance hatch in the floor shall be located adjacent to the inside of the well perimeter, have a curb at least 4 inches high, have the edge of a gasketed, watertight cover extending down over the curb at least 2 inches, and be kept locked when not in use. The structure shall be vented through a vent pipe installed through the floor in accordance with the requirements of s. NR 811.64 (8).

NR 811.17 Special requirements for infiltration lines. (1) The department may approve infiltration lines only when it is not feasible to develop a drilled well.

(2) Infiltration lines are considered to be groundwater under the direct influence of surface water and shall be provided with treatment meeting the requirements of ss. NR 810.30, 810.33, 810.34, 810.35, 810.36, and 810.39.

(3) The supplier of water shall have control of the area around the infiltration lines for a distance approved by the department.

NR 811.18 Special requirements for sandstone wells. The requirements of this section apply to wells drilled in formations commonly referred to as sandstones in Wisconsin. This includes the St. Peter sandstone, the Upper Cambrian sandstones, and the Lake Superior sandstone. All of the following requirements shall be met:

(1) The minimum depth of the grouted casing shall be 60 feet. The grouted casing shall be installed to a depth of 10 feet below the anticipated pumping water level, except in cases when the department determines that this requirement is not necessary to meet the requirements of this chapter.

(2) If the sandstone is overlain by creviced limestone or shale formations, the grouted casing shall be installed a minimum of 15 feet into firm sandstone. The department shall be contacted for the required depth of grouted casing for locations where this type of construction will be required. Wells constructed to utilize aquifers beneath the Maquoketa shale shall be cased and grouted to beneath the depth of the Maquoketa shale.

(3) If the depth of unconsolidated material is more than 60 feet, the grouted casing shall be seated in firm sandstone if the sandstone is the upper rock formation.

(4) If the depth of unconsolidated material is less than 60 feet and the sandstone is the upper rock formation, the department shall be contacted for the required depth of grouted casing.

NR 811.19 Special requirements for limestone or dolomite wells. This section applies to wells drilled in formations commonly referred to as limestones and dolomites in Wisconsin. This includes the Niagara dolomite, the Galena-Platteville dolomite and the Prairie du Chien dolomite. The following requirements apply to wells located in limestone and dolomite aquifers which are not overlain by consolidated shale or sandstone formations.

Note: When an acceptable sandstone aquifer can be utilized, construction of limestone or dolomite wells should be avoided.

(1) At a minimum, continuous disinfection, and possibly detention, shall be provided when the department determines that additional protection is necessary.

(2) Continuous disinfection shall be provided for wells with less than 60 feet of grouted casing.

(3) If the depth of unconsolidated material overlying the limestone is 60 feet or greater for a minimum radius of one-half mile and there is no record of sinkholes, quarries, improperly constructed wells, or outcrops within that area, the minimum depth of grouted casing shall be 60 feet. The casing shall be installed to a depth of 10 feet below the anticipated pumping water level unless the department waives this requirement after finding it unnecessary in meeting the requirements of this chapter.

(4) If the depth of unconsolidated material is more than 60 feet and only 60 feet of grouted casing is required by the department, the casing shall be seated in firm limestone.

(5) If the depth of unconsolidated material is less than 60 feet at the well site or within one-half mile of the well site, the department shall be contacted to determine the required minimum depth of grouted casing. An inner casing size of at least 12 inches in diameter

shall be required to permit the installation of a grouted liner at a future date if the water from the well shows evidence of contamination. The department may waive the casing size requirement if it is demonstrated that it is unnecessary to meet the requirements of this chapter. In such cases, a minimum of 100 feet of grouted casing is usually required and, where conditions dictate, considerably more than 100 feet shall be required.

NR 811.20 Special requirements for granite wells. The department shall be contacted for specific case-by-case constructional requirements for all proposed developments of wells in Precambrian igneous and metamorphic rock commonly referred to as "granite". At a minimum, continuous disinfection and possibly detention, shall be provided when the department determines that additional protection is necessary.

SUBCHAPTER III, SOURCE DEVELOPMENT – SURFACE WATER

NR 811.21 General requirements. Surface water sources include all lakes, rivers and streams. The source of water selected as a surface water supply shall be from the best available source which is practicable. The source shall provide the highest quality water reasonably available which, with appropriate treatment and adequate safeguards, will meet the drinking water standards in ch. NR 809. The department's office of energy should be contacted to initiate pre-application consultation regarding chapter 30 permitting. Any proposal which would result in a diversion from the Great Lakes basin requires department approval in accordance with s. 281.346, Stats.

(1) QUALITY. An investigative study shall be made of the factors, both natural and man made, which may affect water quality. The study shall include:

(a) Determining possible future uses of the water body.

(b) Determining degree of control of the watershed by the water user.

(c) Assessing degree of hazard to the water supply by agricultural, industrial, recreational, shipping and residential activities in the watershed, and by accidental spillage of materials that may be harmful or detrimental to the treatment process.

(d) Assessing all waste discharges, point source and non-point source, and activities that could impact the water supply. The location of each waste discharge shall be shown on a scale map.

(e) For lakes, an analysis of the area water currents and for streams, an analysis of streamflows, and their potential impact on water quality.

(f) Obtaining samples that are representative of the proposed intake structure based on depth and location. Parameters that may be subject to seasonal variation shall be taken for a period of up to one year or over a sufficient period of time to assess such variation. Testing shall include turbidity, pH, alkalinity, hardness, bromide, total organic carbon, color, taste and odor, ammonia, microbiological organisms, heavy metals including lead and copper, volatile organics, synthetic organics, inorganics, and radiological characteristics of the water. The microbiological testing shall satisfy the Long Term 2 Enhanced Surface Water Treatment Rule requirements found in ss. NR 809.33 to 809.335. The source water shall meet the surface water quality standards in ch. NR 102.

(2) QUANTITY. The quantity of the water at the source shall:

(a) Be adequate in conjunction with water from other existing sources to meet the maximum 20 year projected water demand of the service area as shown by calculations

based on a one in 50 year drought or the extreme drought of record and should include multiple year droughts.

(b) Provide a reasonable reserve for anticipated growth.

(c) Be adequate to provide ample water for other legal users of the source in accordance with ss. 30.18, 31.02, 281.35, and 281.41, Stats. and ch. NR 142.

(3) LOCATION. The inlet for the intake shall not be located:

(a) Within 1000 feet of boat launching ramps, marinas, docks, or floating fishing piers which are accessible by the public.

(b) In areas subject to excessive siltation or in areas subject to receiving immediate runoff from wooded sloughs or swamps.

(c) Within 1000 feet of a wastewater treatment plant outfall outlet.

(4) MINIMUM TREATMENT. The design of the treatment processes, equipment, and structures shall depend on an evaluation of the nature and quality of the particular water to be treated.

(a) The design of the water treatment plant must consider the worst conditions that are projected to occur during the life of the facility.

(b) Filtration preceded by appropriate pretreatment shall be provided for all surface waters.

(c) Disinfection shall be provided for all surface waters.

(d) Additional treatment may be required by the department based on raw water sampling and other water quality factors.

NR 811.22 Intakes. Intake structures shall provide for all of the following:

(1) Velocity of flow .25 to .50 feet per second through the inlet structure so that frazil ice will be held to a minimum.

(2) Withdrawal of water from the depth of the best water quality or the capability to draw from more than one level or more than one location if water quality varies with depth or location or both.

(3) Inspection manholes every 1,000 feet for pipe sizes large enough to permit visual inspection.

(4) Adequate protection against rupture by dragging anchors, ice, and other activity.

(5) Locations referenced by permanent monuments or latitude and longitude as measured by a Global Positioning System (GPS).

(6) A diversion device capable of keeping large quantities of fish or debris from entering an intake structure where shore wells are not provided.

(7) Control of nuisance organism where necessary in accordance with s. NR 811.232.

NR 811.23 Shore wells. (1) Shore well structures shall comply with all of the following:

(a) Have motors and electrical controls located above grade and above flood level.

(b) Be accessible for operation and service.

(c) Be designed to prevent flotation.

(d) Be equipped with a minimum of 2 removable or traveling screens or an equivalent means of screening before the pump suction well. Systems with only one screen shall be provided with a bypass.

(e) Provide chlorination or other chemical addition facilities for raw water transmission mains.

(f) Have the intake piping valved with provisions for backflushing and testing for leaks, where practical.

(g) Have provisions for controlling surges.

(h) Have sloped bottoms.

(2) The requirements in sub. (1) may be waived by the department on a case-by-case basis if it is demonstrated that they are not necessary to fulfill the other requirements of this chapter.

NR 811.231 Off-Stream raw water storage.

(1) DEFINITION. In this section, "off-stream raw water storage reservoir" is defined as a facility into which water is pumped during periods of good quality and high stream flow for future release to the treatment facilities.

(2) CONSTRUCTION. Off-stream raw water storage reservoirs shall be constructed to assure all of the following:

(a) Water quality is protected by controlling runoff into the reservoir.

(b) Dikes are structurally sound and protected against wave action and erosion.

(c) Intake structures meet the requirements of s. NR 811.22.

(d) Point of influent flow is separated from the point of withdrawal.

(e) Water is regularly circulated to prevent stagnation.

(f) The reservoir is surrounded by a fence and unauthorized access is prevented.

(g) The reservoir is covered, where practical.

(h) The requirements of s. NR 811.47 (7) are met if the reservoir is to be used as a pre-sedimentation basin.

NR 811.232 Intake chemical treatment. If the department determines that chemical treatment is warranted for taste and odor control or the control of zebra and other mussels and other nuisance organisms in an intake, the following requirements shall be met:

(a) Chemical treatment shall be installed in accordance with subch. VI and plans and specifications shall be approved by the department prior to installation.

(b) Solution piping and diffusers shall be installed within the intake pipe or in a suitable carrier pipe. Provisions shall be made to prevent dispersal of chemicals into the water environment outside the intake. Diffusers shall be located and designed to protect all intake structure components.

(c) A spare solution line shall be installed to provide redundancy and to facilitate the use of alternate chemicals, where practicable.

(d) A sample line out to the intake shall be provided which will allow for collecting raw water samples unless the chemical control system will be shut off for periods sufficient to collect raw water samples at the shore well.

SUBCHAPTER IV, PUMPING STATIONS, PUMPHOUSES, AND WATER TREATMENT PLANT BUILDINGS

NR 811.24 General requirements. All water system related buildings shall be designed to maintain the sanitary quality of the water supply. Buildings subject to the requirements of this subchapter include surface water and groundwater water treatment plant buildings, structures and pumping stations, well pumphouses and enclosures, and

booster pumping stations. Uses of the buildings shall be compatible with the protection of the water supply.

NR 811.25 Buildings. (1) CONSTRUCTION. All water system related buildings shall meet all of the following requirements:

(a) Have adequate space for the installation of additional pumping units, water treatment equipment, chemical feed equipment, or controls, if needed, and for the safe servicing of all equipment.

(b) Be durable, fire and weather resistant, and constructed in a manner to maximize sanitary protection of the water supply.

(c) Be secure. Buildings shall have at least one outward opening door to the outside. All doors, windows, and hatches shall have locks. Any security alarms installed shall be connected to telemetry control and SCADA systems where such systems are used.

(d) Be landscaped to conduct surface drainage away from the station and have a floor elevation at least 6 inches above the finished grade and at least 2 feet above the regional flood elevation. Buildings shall be provided with year round dry land access. Below grade installations may be permitted only if the terrain at the site is such that a gravity drain system can be provided. Subsurface pits or pumprooms and inaccessible installations intended to house well heads, pumps, pump motors, or pump controls for pumping stations are prohibited except for below grade booster pumping stations as allowed per ss. NR 811.80 (3) and (4).

(e) Provide for all floors to drain so that floor runoff does not enter the treatment process or source water. Floors shall be sloped to a drain or sump.

(f) Provide a suitable outlet for drainage water from pump glands so that the disposal of any drainage water is piped to waste or otherwise disposed of in a controlled manner. Pump gland drainage piping shall not be directly connected to a hub drain or a floor drain.

(g) Be provided with concrete floors.

(h) Be provided with at least one floor drain meeting the following requirements:

1. Floor drains and hub drains shall be properly separated from a well. A floor or hub drain and associated piping accepting water from pump gland drainage, a pressure relief or control valve, a sampling faucet, or the floor shall be located no closer than 2 feet to the outer well casing. No building drain piping, except that piping leading to the aforementioned floor or hub drains, containing blackwater or graywater, may be located closer than 8 feet to the outer well casing.

2. Floor drains and hub drains shall have a discharge location that complies with all of the following requirements:

a. Floor drains and hub drains may be connected to a sanitary sewer where available if the building floor elevation is at least one foot above the rim elevation of the nearest upstream sanitary sewer manhole. If a sanitary sewer is available but a manhole is not located nearby or the manhole does not comply with the upstream location or the one foot requirement, the department may require installation of an additional manhole on the sanitary sewer main or on the sanitary building sewer.

Note: The department recommends that the floor drains from chemical feed rooms discharge to a sanitary sewer whenever practicable.

b. Floor drains and hub drains may discharge to the ground surface if the building drain and building sewer piping will only carry water from the floor or hub drain, the discharge location is at least 25 feet from the pumphouse, the exterior invert of the building sewer pipe is at least 6 inches below the building floor elevation and the exterior pipe opening is covered with a corrosion resistant rodent screen. A greater distance may be required for drains of pump stations serving wells constructed in sand and gravel formations. The piping shall terminate in a location that will not allow backflow of surface water into the building.

c. Floor drains and hub drains may discharge to a holding tank located a minimum of 50 feet from the well if the discharge to the building drain and building sewer piping will contain only water from pump gland drainage, a pressure relief or control valve, a sampling faucet or floor drainage. These holding tanks shall be approved by the department's bureau of watershed management wastewater section prior to installation. Floor drains and hub drains may discharge to a holding tank located a minimum of 200 feet from the well if the discharge will contain toilet, sink or other sanitary or domestic waste. These holding tanks shall be approved by the department of commerce prior to installation. In either case the rim elevation of the access manhole to the holding tank shall be at least one foot below the building floor elevation and a high water alarm shall be installed for the holding tank in accordance with the requirements of s. Comm 83.43 (8) (e).

d. French drains are prohibited.

3. The drain may be a trench drain system if the lowest elevation of any trench drain complies with subd. 2. a. Where trench drains are to be connected to a sanitary sewer and compliance with subd. 2. a. is not possible, a sump containing a sump pump shall be installed in the trench to discharge the trench water with a minimum two pipe diameter free air break over a hub drain. The top elevation of the hub drain shall be at least one foot above the elevation of the nearest upstream sanitary sewer manhole rim. Where trench drains will discharge to grade the exterior invert of the building sewer pipe shall be at least 6 inches below the lowest elevation of the trench drain and the exterior pipe opening covered with a corrosion resistant rodent screen.

4. Floor drains shall be constructed of department of commerce approved plumbing materials. The building drain piping shall be constructed of cast iron or PVC piping within 10 feet of the outer well casing.

(i) Pitless units shall be provided with a locked and vented watertight enclosure fastened watertight to a concrete floor. The enclosure shall be weather resistant, of sufficient size to accommodate all well appurtenances and electrical or auxiliary power connections and be accessible for year-round inspection, water sample collection, and water level data collection. Any enclosure vents shall be shielded from the elements and wind-blown debris and the vent openings shall be covered with 24-mesh corrosion resistant screens. Backfill material for slab-on-grade enclosures shall be compacted in lifts. Any slab-on-grade concrete floor shall have minimum dimensions of 4 feet by 4 feet by 6 inches thick and be provided with reinforcing.

(j) A small, doghouse-type, enclosure may be installed over a well and abbreviated above grade pump discharge piping where chemical addition equipment or hydro-pneumatic pressure tank storage is located remote from the well. The department may waive portions of the building installation requirements for small enclosures. The

enclosure shall be secured watertight to a concrete floor and allow for convenient access to the well, piping and any appurtenances. The enclosure shall be locked as applicable. If a floor drain will not be installed, the floor shall be sloped to drain toward the access door if one is provided.

(2) EQUIPMENT SERVICING. Pumping stations shall be provided with all of the following:

(a) Crane-ways, hoist beams, eyebolts, or other facilities necessary for servicing or removal of pumps, motors, or other heavy equipment where appropriate.

(b) Openings in floors, roofs or wherever needed for removal of heavy or bulky equipment. For well pumphouses, a secured roof hatch shall be located over the well.

(3) STAIRWAYS AND LADDERS. Stairways or ladders shall be provided between all floors and in pits or compartments which are to be entered.

Note: Applicants are also advised to consult requirements in applicable local and state codes.

(4) HEATING. Adequate heating shall be provided for the safe and efficient operation of the equipment.

Note: In buildings not occupied by personnel, only enough heat need be provided to prevent freezing, unless higher temperatures are required for proper chemical addition or to allow water treatment and control equipment to function properly. Applicants are also advised that other requirements may exist in local and state codes.

(5) VENTILATION. Ventilation for all pumping stations, pumphouses, and water treatment plant buildings is governed by applicable local and state codes.

(6) DEHUMIDIFICATION. A means for dehumidification shall be provided in pump rooms and in other water system related buildings where excess moisture could cause or is causing safety hazards or damage to equipment or piping.

(7) LIGHTING. All pumping stations, pumphouses, and water treatment plant buildings shall be provided with adequate interior and exterior lighting. The design of exterior lighting should promote security.

(8) SANITARY AND OTHER CONVENIENCES. All pumping stations, pumphouses, and water treatment plants shall be provided with potable water, lavatory, and toilet facilities except for unoccupied automatic stations or if such facilities are available elsewhere. Plumbing shall be installed in a manner to prevent contamination of the public water supply. Threaded hose bibs shall be provided with backflow prevention in accordance with department of commerce requirements. Wastes shall be discharged in accordance with subch. XII.

Note: All plumbing including fixtures, backflow protection, floor drains, hub drains, piping and their installation, testing, and maintenance shall conform to the requirements of chs. Comm 81 to 84.

(9) MULTIPURPOSE BUILDINGS. Water supply buildings may be enclosed in or attached to buildings that serve multiple purposes such as a park building, garage, office, storage or restroom facility if the purposes for which the building are used are compatible with the protection of the water supply. In all cases the water supply facilities shall be separated by walls from the other building uses with access to the water supply facilities gained by separate locked doors and restricted to authorized water system personnel. The specific requirements for multipurpose buildings shall comply with subs. (1) to (8) where applicable.

NR 811.26 Number of pumping units. All pumping stations for systems using either groundwater or surface water shall meet the following requirements:

(1) There shall be two or more pumping units, with each unit capable of supplying the peak demand. The department may approve exceptions under sub. (2), if additional pumping stations which can meet the peak demand are available or if the department determines that there will be a sufficient volume of storage available between pumping periods to allow for necessary repairs. Depending on the type and size of the water system, a sufficient volume of storage may include elevated storage, ground storage fitted with high-lift pumps and auxiliary power, and pressure tank storage. If only 2 units are provided, each unit shall be capable of supplying the peak demand. If more than 2 units are installed, the total number of units shall have sufficient capacity so that if any one pump is taken out of service, the remaining pumps are capable of supplying the peak demand.

(2) If no elevated storage is available and more than 50 living units are to be served, there shall be 2 or more wells or pumping units, each of which is capable of supplying the peak demand. An approved interconnection with another water system or a ground storage reservoir with high-lift pumps may be used in lieu of this requirement for other-than-municipal water systems.

(3) Have controls for proper alternation when 2 or more pumps are installed.

NR 811.27 Auxiliary power. All municipal pumping stations, pumphouses, and water treatment plants shall have a standby auxiliary power source unless the department determines that there is sufficient pumping capacity with existing auxiliary power located at other water system facilities to provide at least an average day supply of water. Sufficient power shall be provided to operate pumps, treatment systems, chemical addition, control systems, and monitoring equipment. Auxiliary power for chemical addition, treatment, and monitoring equipment is not required if the treatment, chemical addition, control, and monitoring equipment is not necessary to meet the primary drinking water standards in ch. NR 809 or the continuous disinfection requirements of chs. NR 810 and NR 811.

(1) POWER SOURCES. Standby power may be provided by any of the following:

(a) A dedicated on-site generator or engine. A dedicated on-site generator may be located inside or outside the building. Dedicated on-site engine-generator sets installed within the building shall be located in a separate room. Diesel fuel tanks shall be provided with secondary containment and interstitial leakage monitoring and the installation shall receive written approval from the department of commerce or its authorized agent under ch. Comm 10 prior to installation. All fuel lines shall be exposed above grade. Water lines to water cooled units shall be provided with backflow prevention in accordance with s. Comm 82.41.

(b) A portable power source owned by the municipality and dedicated to the water supply facility operation.

(c) A portable power source not owned by the municipality but only if the water system owner obtains a written agreement with the owner of any portable power source, including tractors or trailered engine-generator sets, that requires the water system owner to have primary access to the power source in an emergency and that allows the portable power source to be brought to the water system as required for testing. The portable

power source should be located in the community if possible but shall be located within 10 miles of the water system facilities at which it will be used.

Note: The department recommends the use of water system owned dedicated on-site or portable engine-generator sets in all cases. It is recommended that the equipment necessary to convert natural gas fueled engines to propane be maintained on site in case the natural gas supply has to be shut off for any significant length of time. It is recommended that exterior engine-generator set installations be installed within a locked security fence.

(2) ALTERNATE PRELUBRICATION METHODS. The pump installation shall be provided with a prelubrication line with a valved bypass around the automatic control and backflow protection, if appropriate, in order to allow temporary continuous prelubrication, whenever automatic prelubrication of pump bearings is necessary and an auxiliary power supply is provided that will not provide power to the automatic prelubrication controls.

NR 811.28 Additional requirements. (1) SUCTION OR WET WELLS. Suction or wet wells, including installations where the pumps are installed on top of a reservoir, but excluding remote booster pumping installations shall:

(a) Meet the applicable reservoir construction requirements of subch. IX.

(b) Have all below grade metal pump cans, if installed, exposed in a basement or vault.

(c) Have two pumping compartments or other means to allow the suction well to be taken out of service for inspection, maintenance, or repair.

(2) SUCTION LIFT. Suction lift shall be allowed only for distances of less than 15 feet and where provision is made for priming the pumps. Suction lift may not be permitted if buried piping carries the finished water.

(3) PRIMING. Prime water may not be of lesser sanitary quality than that of the water being pumped. Means shall be provided to prevent backflow. When an air-operated ejector is used, the screened intake shall draw clean air from a point at least 10 feet above the ground or other source of contamination, unless the air is filtered by apparatus approved by the department. Vacuum priming may be used.

(4) AUTOMATIC AND REMOTE CONTROLLED STATIONS. All automatic stations shall be provided with automatic signaling equipment which will report pump on-off operation and the status of other important functions, such as intrusion alarms, to the main station. Pressure monitoring shall be included if a separate pressure zone is established. All remote controlled stations shall be electrically operated and controlled and shall be provided with reliable signaling equipment.

Note: See subch. XI for booster pumping facilities in the distribution system.

(5) APPURTENANCES. (a) *Valves.* Pumps shall be adequately valved to permit satisfactory operation, maintenance and repair of the equipment. If foot valves are provided, they shall have a net valve area of at least 2.5 times the area of the suction pipe and shall be screened. Each pump shall have an automatically closing valve or check valve on the discharge side between the pump and shutoff valve. Devices such as motor controls, slow opening and closing check valves, or surge relief valves shall be installed where necessary to minimize pressure surges or water hammer.

(b) *Piping.* Piping shall be designed to minimize friction losses and shall be protected against pressure surges or water hammer. Piping shall be supported, restrained, and

buttressed as necessary. Where applicable, each pump shall have an individual suction line or lines so manifolded that they insure similar hydraulic and operation conditions. Discharge piping exposed in buildings shall be ductile iron, copper, steel, stainless steel, or galvanized pipe. The use of minimum schedule 80 PVC pipe meeting the requirements of Comm table 84.30-7 is acceptable where the water to be carried in the piping can be documented as being aggressive to metal pipe or where necessary to be compatible with water treatment equipment and processes provided that the piping is properly restrained.

(c) *Gauges and meters.* Each pump shall have a standard pressure gauge on its discharge line and have a compound pressure gauge on its suction line if suction pressures are expected to be encountered. Where suction or discharge headers are utilized, only one gauge is required on each header. In addition, the station shall have indicating, totalizing, and recording metering of the total water pumped.

Note: Discharge pressure recording devices are recommended at the larger stations.

(d) *Water seals.* Water seals may not be supplied with water of a lesser sanitary quality than that of the water being pumped. Where pumps are sealed with potable water and are pumping water of lesser sanitary quality, the water supply to the seal shall:

1. Be provided with a department of commerce approved reduced principle backflow preventer or a break tank open to atmospheric pressure.

2. Where a break tank is provided, have an air gap, at least 6 inches or 2 pipe diameters, whichever is greater, between the feeder line and the spill line of the tank.

(6) PAINTING OF PIPING. In order to facilitate identification of piping in waterworks, pumping stations, pumphouses and, water treatment plants, it is recommended that the following color schemes be utilized for purposes of standardization:

(a)	*Water Lines*	*Color*
	Raw	Olive Green
	Settled or Clarified	Aqua
	Finished or Potable	Dark Blue
(b)	*Chemical Lines*	*Color*
	Alum	Orange
	Ammonia	White
	Carbon Slurry	Black
	Caustic Soda	Yellow with Green band
	Chlorine –Gas and Solution	Yellow
	Chlorine Dioxide	Yellow with Violet Band
	Fluoride	Light Blue with Red Band
	Lime Slurry	Light Green
	Ozone	Yellow with Orange

		Band
	Phosphate Compounds	Light Green with Red Band
	Polymers or Coagulant Aids	Orange with Green Band
	Potassium Permanganate	Violet
	Soda Ash	Light Green with Orange Band
	Sulfuric Acid	Yellow with Red Band
	Sulfur Dioxide	Lt. Green with Yellow Band
(c)	*Waste Lines*	*Color*
	Backwash Waste	Light Brown
	Sludge	Dark Brown
	Sewer – Sanitary or Other	Dark Gray
(d)	*Other Lines*	*Color*
	Compressed Air	Dark Green
	Gas	Red
	Other Lines	Light Gray

(e) For liquids or gases not listed above, a unique color scheme and labeling should be used. In situations where two colors do not have sufficient contrast to easily differentiate between them, a 6 inch band of a contrasting color shall be painted on one pipe at approximately 30 inch intervals. The name of the liquid or gas should also be painted on the pipe. Arrows may be painted on the piping indicating the direction of flow.

SUBCHAPTER V, PUMPING EQUIPMENT AND APPURTENANCES

NR 811.29 Pumping capacity requirements. Figure No. 1 located in the Appendix shall be used for determining minimum pump capacities for domestic service only unless specific information is submitted to the department for review and the department approves the alternate pump capacities. When using Figure No. 1, the number of homes may be reduced by one-third for apartment units, condominium units, and manufactured (mobile) homes. More detailed engineering studies are necessary for determining pump capacities in systems providing water for multiple uses, including domestic, commercial and industrial usage and fire protection.

NR 811.30 General pump, motor and wiring installation requirements.

(1) INSTALLATION LOCATION. All nonsubmersible pump motors and all electrical controls shall be located above grade and protected from flooding, except as allowed for below grade booster pumping stations in s. NR 811.80 (3).

(2) MOTOR, WIRING AND ELECTRICAL CONTROLS. All exposed wires shall be encased along their entire length and otherwise installed in a manner to prevent contamination of the water supply. All motors, wiring, and electrical controls shall be installed in conformance with all applicable state and local electrical code requirements.

Note: It is recommended that all pumps and motors be assessed during design to ensure that they will be energy efficient throughout their operational range and over their usable service life. It is recommended that all pump motors be provided with a recording watt meter.

NR 811.31 Line-shaft vertical turbine pumps. (1) PUMP BASES. Line-shaft vertical turbine pump base installations shall meet the requirements of this subsection and as shown in Figure Nos. 2 and 3 in the Appendix:

(a) Line-shaft vertical turbine pumps shall be supported by a concrete pump base which is installed to a height at least 12 inches above the pump station floor.

(b) The protective grouted casing of wells shall extend a minimum of one inch above the concrete pump base. If there is also an inner ungrouted casing, the inner casing shall extend a minimum of one inch above the pump base and the protective grouted outer casing shall extend a minimum of 4 inches above the floor and shall be incorporated into the concrete pump base. For these installations, a steel ring shall be welded between the inner and protective casings.

(c) The metal surfaces between the pump head and base plate shall be machined or gasketed to provide a watertight seal. A gasket or sealant shall be provided between the base plate and the concrete pump foundation.

(d) For high-lift line-shaft vertical turbine pumps installed above a reservoir, a steel casing shall be installed within the concrete pump base from the reservoir roof to a height above the pump base to provide a one inch sanitary lip. The requirements of pars. (a) to (c) shall also be met if applicable.

(2) PUMP LUBRICATION. (a) Water lubricated pumps are required, except if oil lubricated pumps are necessary to provide positive lubrication. The oil used for pump lubrication shall be an NSF/ANSI Standard 61 approved mineral oil. Oil lubricated pumps may not be installed for wells in unconsolidated formations or for wells with shallow pump settings less than 250 feet.

(b) For water lubricated pumps with static water levels deeper than 50 feet, provision shall be made for prelubricating the column bearings prior to pump startup. All prelubrication water lines shall be equipped with metering or controls to monitor and limit the volume of prelubrication water. At systems where chemical addition is practiced, solenoid valve control of the prelubrication water line shall be provided. If auxiliary power is provided, additional valving of the prelubrication water line shall be provided. When pump backspin is allowed to occur after the motor shuts off, the design engineer for the water system shall determine the necessity for lubrication during this period and provide for lubrication if necessary.

NR 811.32 Submersible vertical turbine pumps. (1) PUMP BASES. If a submersible pump is used, the top of the well casing shall be effectively sealed against entrance of water under all conditions including vibration or movement of conductors or cables. Requirements for the installation of pitless units are provided in s. NR 811.35.

Submersible pump installations shall meet the requirements of this subsection and as shown in Figure Nos. 4, 5, and 6 in the Appendix:

(a) *Termination above grade.* The protective casing shall terminate above grade a minimum of 12 inches above a concrete floor. Submersible pump discharge pipes shall be extended to terminate through the top of the well casing.

(b) *Well seals.* Well seals shall consist of a sanitary surface plate bolted down with a gasketed or machined seal to a flange welded to the well casing or alternatively, a department approved well seal with one-piece top plate. All openings in the well seal shall be sealed watertight with grommets or compression fittings to prevent the entrance of contaminants.

(c) *Protective collars and pump bases.* 1. The protective casing shall terminate at least 12 inches above the floor and be surrounded by a pump base or a minimum 1.5-inch thick concrete collar. Either the pump base or the concrete collar shall be installed to a height at least 6 inches above the floor.

2. If a pump base is installed, any other outer well casing shall be terminated a minimum of 4 inches above the finished floor and incorporated into the pump base.

3. A short section of outer well casing may be installed around the protective casing and the annular space between the two casings filled with grout to meet the collar requirement of subd. 1.

(2) DROP PIPES. Vertical drop pipes for submersible pumps located within the well casing shall be constructed of steel, stainless steel, or galvanized steel pipe. The department shall be contacted to request approval for an alternate minimum 150 psi pressured rated plastic drop pipe material specification which shall be granted if its use can be justified due to a corrosive water condition. All vertical drop pipe material specifications shall meet or exceed the requirements of s. NR 812.28 and the Pipe and Tubing for Water Services and Private Water Mains table found in ch. Comm 84.

NR 811.33 Motor protection. If backspin can be expected to occur, the motor shall be provided with a time delay or non-reverse ratchet to protect the motor in case the pump controls are energized before the pump stops backspinning.

NR 811.34 Pump variable output control devices. Installations where pumps and pump motors will be physically or electronically controlled by a variable output control device shall meet the following requirements:

(1) PUMPING CAPACITY TO MEET PEAK DEMAND. The gallon per minute discharge rates of the pump or pumps shall be capable of meeting the peak demand rate when there is no elevated storage and the pressure tank storage volume will be reduced due to the installation of the variable output control device or devices.

(2) HIGH PRESSURE CUT-OUT SWITCH. A high pressure cut-out switch shall be installed on the pump discharge piping to stop the pump motor when a preset maximum discharge pressure is detected if the pump shut-off head at the maximum possible speed will exceed the safe working pressures of the piping and appurtenances.

(3) PRESSURE RELIEF VALVE. A pressure relief valve shall be installed on the pump discharge piping sized to allow adequate pressure to be relieved if a malfunction that would cause the pump to discharge at the maximum possible rate would result in pressures exceeding the safe working pressures of the piping and appurtenances.

(4) BACKUP CONTROLS. All water systems supplied by one well or booster pump shall be provided with a redundant means of controlling the operation of the pump motor. Such

means may include the installation of an electrical bypass of the variable output control device along with the installation of pressure switches or other department approved installation.

(5) FLOW PACING FOR CHEMICAL FEED PUMPS. Where pump discharge rates will vary after initial startup of the pump all chemical feed pumps shall be paced from a flow proportional signal from a water meter. This requirement is in addition to any requirement for the chemical feed pump to be wired to operate in series with the pump motor starter and any required secondary chemical feed pump control mechanism.

(6) ADEQUATE STORAGE. Storage shall meet the following requirements when there is no elevated storage or the minimum pressure tank storage volume normally required by s. NR 811.61 (7) will be reduced due to the installation of one or more variable output control devices.

(a) For other-than-municipal water systems and small municipal water systems not provided with elevated storage, the gross pressure tank storage volume shall be a minimum of 2.5 times the design pump output in gallons per minute. When a vertical turbine pump requiring prelubrication or an auxiliary power source with an automatic transfer switch is employed, calculations shall be provided to the department to demonstrate that the storage volume is adequate to provide the necessary time for the prelubrication to occur or for the auxiliary power source to come on line before the system pressure drops below 20 psi as a result of a brief electrical power outage.

(b) For a control valve type of installation, the gross pressure tank storage volume shall be a minimum of 5 times the design pump output in gallons per minute to prevent the pump motor from over-heating.

(c) For booster or high-lift pump installations where the pump is discharging to a distribution system without elevated storage, the gross pressure tank storage volume shall be a minimum of 2.5 times the design pump output in gallons per minute.

(d) As an alternate to pars. (a) to (c), the department may approve other proposed pressure tank storage volumes when justified by supporting information submitted to the department.

(e) Control or piping and valve measures shall be provided to prevent water from becoming stagnant in pressure tanks where water would otherwise be forced to reside in the pressure tanks for long periods if the pump will operate continuously to maintain system pressure.

(f) Additional storage volume shall be provided for adequate operation of water treatment equipment including storage volumes necessary to obtain required reaction or disinfection detention times in detention vessels. The storage volumes shall be calculated by the design engineer assuming the pump or pumps are discharging at the maximum possible rate.

(7) VENTILATION. Automatically controlled forced air ventilation shall be installed for any room where an electronic variable output control device will be installed and room temperatures will exceed 90 degrees F.

(8) MEASURES TO PREVENT DAMAGE FROM CORROSIVE CHEMICALS. The installation of an electronic variable output control device may not be allowed in a corrosive environment. Electronic variable output control devices may not be installed in the same room with fluoride acid chemical feed equipment. Preventive measures such as adequate sealing and ventilation of chemical containers and solution tanks shall be taken to

minimize the production of corrosive fumes from other kinds of chemical feed installations, including sodium hypochlorite. The installation of a separate chemical feed room or the installation of room or chemical feed system ventilation improvements may be required by the department where significant damage from corrosive fumes has been documented.

(9) DEHUMIDIFICATION OR AIR CONDITIONING. Dehumidification or air conditioning equipment shall be installed in any room where an electronic variable output control device will be installed and excessive moisture will be a concern.

NR 811.35 Pitless units. Pitless units shall be installed in a manner to provide equivalent security, sanitary protection, accessibility, and operational flexibility to an above grade pump discharge installation and in accordance with the requirements of this section and as shown in Figure No. 7 in the Appendix.

(1) TERMINATION. Pitless units shall terminate a minimum of 12 inches above a concrete floor as required by ss. NR 811.12 (1) and 811.32 (1) (a). If the vent assembly is built into the pitless unit, the portion of the pitless unit where the bottom of the vent assembly is located shall be terminated a minimum of 24 inches above the concrete floor. Pitless units shall be provided with a protective concrete collar where they pass through the concrete floor as required by s. NR 811.32 (1) (c). The exterior exposed conduit pipe for the pump wiring shall be rigid steel and the conduit pipe incorporated into the concrete collar.

(2) ENCLOSURE. The exposed portion of a pitless unit shall be surrounded by a weather resistant, watertight, locked, and vented enclosure secured to a concrete floor as required by s. NR 811.25 (1) (i). The top surface of the concrete floor shall be located a minimum of 6 inches above the finished grade.

(3) APPURTENANCES. The top of the pitless unit shall be sealed sanitarily in accordance with s. NR 811.32 (1) (b), provided with a well vent and water level measuring equipment in accordance with s. NR 811.36, and shall be provided with a frost-proof down-turned metal smooth end sampling faucet terminating above the top of the pitless unit and a minimum of 12 inches above the concrete floor of the enclosure unless the sampling faucet is installed remote from the pitless unit in accordance with sub. (6) (h).

(4) DISCHARGE PIPING. Discharge piping from a pitless unit shall meet the following requirements:

(a) The discharge piping from the pitless unit shall be directed to a separate building located above grade where all of the applicable pump discharge piping appurtenances shall be installed in accordance with s. NR 811.37 and Figure No. 7 in the Appendix.

(b) The discharge piping from the pump in the well to the above grade pump discharge piping shall remain pressurized at all times. No provisions for drain back of the discharge piping may be allowed. A shut-off valve shall not be installed in the buried portion of the pitless unit discharge piping unless approved by the department as part of a pump-to-waste installation.

(c) The buried portion of a pitless unit discharge piping along with any joints or fittings shall be ductile iron, steel, or plastic piping meeting at minimum the AWWA pressure class 150 water main standards required per s. NR 811.69. Plastic piping shall not be used in areas where soil or groundwater contamination may be present. Plastic piping shall be transitioned to metal piping within 12 inches above the floor of the building into

which it will be directed, under par. (a), unless minimum schedule 80 PVC pipe is installed in the building per s. NR 811.28 (5) (b).

(5) CHECK VALVES. A check valve shall be installed in the submersible pump discharge piping in the well immediately above the pump. A check valve shall not be installed in the buried pitless unit discharge piping. A check valve may not be installed in the above grade pump discharge piping unless preceded by the pump on and off controls, or one or more pressure tanks, or unless the department approves an alternate method to maintain positive pressure in the piping under all operating conditions.

(6) SPECIFIC INSTALLATION REQUIREMENTS. (a) Pitless units shall be factory assembled and pressure tested, full length units, with the make and model number having received individual department approval for use. The inside diameter of the pitless unit shall not be smaller than the inside diameter of the well casing pipe as required by s. NR 812.34 (2) (b).

(b) The department may not approve installation of a pitless unit unless any temporary outer well casing is totally removed from the well during the well construction process. Pitless units shall be attached only to the protective grouted well casing, including wells constructed with gravel packed screens.

(c) The top surface of the remaining well grout shall be no greater than one foot below the installation depth of the pitless unit, which is the well casing cut-off depth.

(d) The pitless unit shall be installed in accordance with the requirements of s. NR 812.31 (3) (a).

(e) Pitless units shall be installed by a licensed pump installer. The installed pitless unit shall be tested and proven watertight under a pressure of not less than 14 psig. The pressure shall be maintained for a minimum of 30 minutes. Additionally, any leaks detected shall be sealed during the pressure test. The installer shall notify the department a minimum of 48 hours before performing the pressure testing so that a department employee may witness the test. A report on the results of the pressure testing, signed by a licensed pump installer, shall be submitted to the department before placing the well in service.

(f) A certification by the licensed pump installer that installed the pitless unit confirming that the well was originally grouted to the ground surface and that the requirements of pars. (b) and (c) were met, shall be submitted to the department along with the pressure testing report and a copy of the well construction report.

(g) Backfilling of the excavation shall commence as soon as practical after the installation and a successful pressure test of the pitless unit.

(h) For slab-on-grade enclosures, a below grade length of pump discharge piping from the pitless unit, sufficient to extend beyond the enclosure, shall be installed prior to backfilling of the excavation and construction of the concrete floor slab. The buried piping shall be temporarily capped in a sanitary manner unless the piping is immediately extended and connected to the remainder of the system. During the installation of the discharge piping, if the sampling faucet riser pipe is not installed within the well and pitless unit, a metal riser pipe shall be extended vertically from the below grade discharge piping to terminate at a height a minimum of 12 inches above the top of the future concrete floor. The riser pipe shall be fitted with a frost-proof, down-turned, metal, smooth-end sampling faucet or shall be temporarily capped.

NR 811.36 Well appurtenances. (1) WELL VENT. Each well shall be vented to the atmosphere in accordance with the following requirements:

(a) For wells without pitless units, a metal vent pipe shall be installed which terminates in a 24-mesh corrosion resistant screened "U" bend or mushroom cap at least 24 inches above the floor. The vent pipe diameter shall be a minimum of 2 inches for well casings 10 inches in diameter and larger. Vent piping shall be welded watertight to the side of the well casing a minimum of 4 inches above the floor and may extend through a concrete pump base or collar where one is present. Alternatively, vent piping may project watertight through a well seal or pump discharge head if the well seal or discharge head will facilitate the installation of the vent pipe.

(b) For wells with pitless units, a metal vent pipe shall be installed which terminates in a 24-mesh corrosion resistant screened "U" bend or mushroom cap at least 24 inches above the floor. The pitless unit vent area shall be equal to or greater than the area provided by a 2-inch diameter vent pipe for pitless units 10 inches in diameter or larger. Vent piping shall extend above or be incorporated into the top of the pitless unit or be welded watertight to the side of the pitless unit a minimum of 4 inches above the floor and may extend through a concrete pump base or collar where one is present.

Note: It is recommended that vent installations for pitless units be factory installed to prevent damage to the integrity of factory units and paint systems.

(c) If the well is flowing, the vent shall terminate above the artesian water level or a suitable automatic valve shall be provided.

(2) WATER LEVEL MEASUREMENTS. (a) Provisions shall be made for measurement of static and pumping water levels in the completed well by the use of an electric depth gauge, pressure transducer or an air line attached to the pump column and an altitude gauge.

(b) The installation shall be constructed to prevent entrance of foreign material.

(c) Air lines may not be installed through vent pipes unless justified when modifications are being made to existing installations, the minimum 2-inch diameter vent pipe area is maintained where applicable, and the specific approval of the department is obtained.

NR 811.37 Pump discharge lines. Pump discharge lines shall meet the requirements of this section and as shown in Figure Nos. 8 and 9 in the Appendix.

(1) BURIED LINES. Adequate positive pressure shall be maintained on all buried piping. Pump suction and discharge lines which are to be buried shall be designed so that the line is under a continuous pressure head which is higher than the elevation of the ground surface under all operating conditions. Lines where a positive pressure head which is higher than the elevation of the ground surface cannot be maintained may be installed if the lines are encased for their entire length in watertight pipe conduit or a tunnel. Buried suction lines which, under all operating conditions, are not under a positive pressure head which is higher than the elevation of the ground surface are not permitted.

(2) ABOVE GRADE PIPING MATERIALS. Above grade pump discharge line piping materials shall meet the requirements of s. NR 811.28 (5) (b).

(3) LOCATION OF APPURTENANCES. Pump discharge piping containing appurtenances such as valves, sampling faucets, water meters, and other equipment shall be located above the ground surface.

(4) PUMP-TO-WASTE. All wells and high-lift pump stations shall be provided with a means to pump to waste. This shall be a plugged tee or blind flange or a shut-off valve followed by a hose connection installed on the pump discharge piping inside the pump station. For municipal and subdivision water systems, a valve and hydrant may be installed outside the pump station on the buried pump discharge piping.

Note: It is recommended that pump-to-waste fittings installed inside the pump station be installed as close as possible to the well or pump head in order to minimize the piping and appurtenances that water to be wasted will be pumped through.

(5) PUMP DISCHARGE PIPING APPURTENANCES. The following appurtenances shall be provided for pump discharge piping in addition to the means for pumping the well to waste required in sub. (4). Additional requirements for the installation of pump discharge piping and appurtenances for pitless unit installations are given in s. NR 811.35.

(a) *Air-vacuum relief valve.* For line-shaft vertical turbine pump discharge pipes, an air-vacuum relief valve shall be installed between the pump and the check valve. The discharge line from the relief valve shall face downward and terminate with a 24-mesh corrosion resistant screen, at least 24 inches above the floor. For well line-shaft vertical turbine pump discharge pipes that discharge directly to reservoirs, the air relief valve is not required but a vacuum relief valve and a check valve are required. The installation of an air-vacuum relief valve is not required for submersible pump installations where check valves are installed at the pump and above grade and there are no weep holes in the pump drop pipe unless entrained air or pressure surges are a concern and the installation of an air relief valve is necessary or required by the department.

(b) *Sampling faucet.* All pump discharge piping shall contain one or more sampling faucets meeting the following requirements:

1. A water sampling faucet shall be installed and located upstream of any chemical addition or water treatment equipment to allow for the collection of raw water. If possible, the faucet shall be located prior to any above grade check valve.

2. If chemical addition, water treatment, or water storage is installed, a second entry point sampling faucet shall be installed as far downstream of the chemical injection, water treatment, or water storage as practical. If necessary to obtain a water sample representing finished water quality, a water service lateral shall be brought back into the building and fitted with a sampling faucet after being connected to the finished water main outside the building.

3. All sampling faucets shall be installed to terminate a minimum of 12 inches above the floor, have a down-turned smooth end spout, be constructed of metal, have a minimum spout diameter of 0.25 inches, be installed directly on the piping conveying the water whenever possible, and be located in an area accessible for sampling.

(c) *Check valve or other type of automatically closing valve.* A check valve shall be provided except if prohibited at pitless unit installations under s. NR 811.35 (5). Where extreme surge pressures occur, slow opening valves, voltage ramped motors, or other means of surge protection shall be provided.

(d) *Meters.* All municipal well pump discharge pipes, all other-than-municipal well pump discharge pipes with pumps discharging at a rate greater than or equal to 70 gallons per minute or if chemical addition is practiced, all groundwater reservoir high-lift pumps if chemical addition is practiced, and all surface water low-lift and high-lift combined

pump discharge pipes shall be provided with water meters to determine the quantity of water discharged.

Note: It is recommended that an hour meter be installed for any pump motor where the pump discharge piping will not be provided with a water meter.

(e) *Shut-off valve.* A shut-off valve shall be provided.

(f) *Pressure gauge.* A pressure gauge shall be provided.

(g) *Chemical injection tap*. A chemical injection tap allowing chemical injection, shall be provided and installed in accordance with s. NR 811.39 (2) (f).

SUBCHAPTER VI, CHEMICAL ADDITION

NR 811.38 General. This subchapter contains general requirements for the design and construction for chemical storage, handling, and addition facilities. Specific treatment design requirements are contained in subch. VII. Specific operating requirements are contained in subch. I of ch. NR 810. No chemicals may be applied to treat drinking water unless approved by the department. This requirement applies to first time application, temporary application, or when it is proposed to replace one chemical with another. The department shall be contacted prior to discontinuing the use of any chemical.

NR 811.39 Feed equipment. (1) NUMBER OF FEEDERS. If chemical feed, such as chlorination, coagulation or other essential processes, is necessary to produce a water quality meeting the primary maximum contaminant levels, a minimum of two feeders shall be provided so that a standby unit or combination of units will be available to replace the largest unit during shut-downs. Spare parts shall be available for all feeders to replace parts which are subject to wear and damage.

(2) DESIGN AND CAPACITY. The design and capacity of chemical feed equipment shall meet all of the following requirements:

(a) *Separate chemical feed systems.* Separate chemical feed systems shall be provided in accordance with the following requirements:

1. A separate feed system shall be provided for each chemical.

2. Separate disinfection chemical feed systems shall be provided if pre- and post- water treatment disinfection application points are installed.

3. Each chemical feed pump or gas feeder shall take suction from its own dedicated chemical solution tank or gas cylinders. The department may approve multiple chemical feed pumps or gas feeders for the same process application point taking suction from the same chemical solution tank or gas cylinders in the following situations:

a. Where multiple water sources are discharging to the same location. In this case, a means shall be provided for determining the flow from each individual water source.

b. Where multiple pumps are pumping from the same water source and discharging to the same location through a combined header pipe. In this case, a means shall be provided for measuring total flow.

c. For the situations in subds. 3. a. and 3. b., a single chemical feeder with a single feed point or multiple chemical feeders with multiple feed points may be used, provided the installation meets the other requirements of this subchapter.

Note: An example of subd. 3. a. would be multiple wells discharging to a single reservoir or water treatment plant. An example of subd. 3. b. would be multiple high-lift

pumps taking suction from a single reservoir and discharging to a combined pump discharge pipe.

(b) *Acceptable chemical feed pumps.* Positive displacement diaphragm metering pumps, peristaltic chemical feed pumps or other pumps, as approved by the department, shall be used to feed liquid chemicals. Pumps shall be sized to match or exceed maximum head conditions found at the point of injection.

(c) *Chemical feeder settings.* Feeders shall be able to supply, at all times, the necessary amounts of chemical at an accurate rate, throughout the range of feed. All positive displacement diaphragm metering pumps shall be operated at a minimum speed setting of 12 strokes per minute. For positive displacement diaphragm metering pumps with an adjustable stroke length the pumps shall be operated at a minimum of 20 per cent of the maximum stroke length. Peristaltic chemical feed pumps shall be operated at a minimum of 10 per cent of the maximum feeder output. If these operating requirements cannot be met using stock chemical solution, dilution of the chemical shall be required.

(d) *Flow paced chemical feed.* Automatic proportioning of chemical feed to rate of water flow shall be provided when water flow rates will vary. Chemical feed pumps shall be proportionally flow paced by a signal from a water meter when discharge rates from a well or service pump will be variable over the pump cycle. When applicable, this includes variable output control devices as required by s. NR 811.34 (5).

(e) *Anti-siphon devices.* Chemical feed pumps shall be provided with anti-siphon devices meeting the following requirements:

1. All electronic positive displacement diaphragm metering pumps shall be provided with a spring-opposed diaphragm type anti-siphon device or a spring opposed diaphragm type anti-siphon and back pressure valve device installed in the discharge piping of the chemical feed pump. The anti-siphon and back pressure functions may be part of a common device or separate devices. Any back pressure valve shall be set to open at a pressure greater than the maximum pressure in the piping or facilities into which the chemical feed pump will discharge. When a back pressure valve is installed on the discharge piping of a chemical feed pump, it shall be preceded by a pressure relief valve and a pressure gauge or other department approved means to verify that the back pressure valve is operating satisfactory.

2. Digitally controlled diaphragm metering pumps shall be provided with a spring opposed diaphragm type anti-siphon and back pressure valve device installed in the discharge piping of the chemical feed pump in accordance with the requirements of subd. 1.

3. Peristaltic chemical feed pumps shall be provided with a back pressure valve device installed in the discharge piping of the chemical feed pump in accordance with the requirements of subd. 1.

4. The department may be contacted to request approval of an equivalent anti-siphon device or equivalent means of providing anti-siphon protection if the installation of the anti-siphon devices as required in subds. 1. to 3. is not practical given the properties of the chemical to be fed. Adequate justification shall be provided to the department for the request.

(f) *Location of chemical injection.*

1. Chemical solutions shall be prevented from being siphoned into the water supply. Anti siphon protection shall be provided by discharging chemicals at points of positive

pressure and by providing anti-siphon devices in accordance with par. (e), or through a suitable air gap or other effective means approved by the department. A point of continuous positive pressure shall be assured on the system side of the last shut-off valve. If a second shut-off valve is provided downstream of the primary shut-off valve, the point of injection may be between the two shut-off valves.

2. All chemicals shall be fed downstream of the check valve. Strong acids and bases such as fluorosilicic acid and sodium hydroxide shall be fed downstream of both the check valve and the shut-off valve.

Note: It is recommended that all chemicals be fed downstream of both the check valve and the shutoff valve.

3. If chemical feeding is at a location without continuous positive pressure, one of the following installation requirements shall be met to prevent siphoning of chemical solutions:

a. A suitable air gap shall be provided which is at a higher elevation than the chemical solution tank.

b. A dual head feeder with a small break tank located higher than the chemical solution tank shall be provided.

c. A chemical feed pump discharging without any air gap or break box may be approved by the department on a case-by-case basis if the installation is provided with a spring opposed diaphragm type anti-siphon and back pressure valve device. The back pressure valve shall be installed as close as possible to the point of chemical addition. The spring opposed diaphragm type anti-siphon and back pressure valve device shall be installed in accordance with the requirements of par. (e) 1.

(g) *Makeup water lines.* The makeup water supply lines to chemical feed tanks shall be protected from contamination by chemical solutions either by equipping the supply line with backflow or backsiphonage prevention devices, or by providing an air gap between the supply line and the top of the solution tank.

(h) *Chemical resistance.* Materials and surfaces coming in contact with chemicals shall be resistant to the aggressiveness of the chemical solution.

(i) *Dry chemical feeders.* Dry chemical feeders shall meet the following requirements:

1. Measure chemicals volumetrically or gravimetrically.

2. Provide effective dissolving and mixing of the chemical in the solution pot and provide gravity feed from solution pots, if possible.

3. Completely enclose chemicals to prevent emission of dust to the operating room.

(j) *Direct sewer connections prohibited.* No direct connection shall be made between any sanitary or storm sewer and a drain or overflow from any feeder or solution chamber or tank.

(3) LOCATION. Chemical feed equipment shall meet the following requirements:

(a) Be located near points of application to minimize length of feed lines.

(b) Be readily accessible for servicing or repair and observation of operation.

(c) Be located and have protective containment curbs so that chemicals from equipment failure, spillage, or accidental drainage may not enter the water in conduits, treatment, or storage basins.

(d) Be located within a containment basin capable of receiving accidental spills, drainage, or overflows without an uncontrolled discharge outside of the containment

basin. A common containment basin may be provided for each group of compatible chemicals. At minimum, the containment basin shall be sized to contain the volume of the largest tank that could fail. Chemical containment basins shall not be provided with floor drains. Trapped and vented floor drains discharging to sanitary sewers, holding tanks or the ground surface in accordance with s. NR811.25 (1) (h) may be installed for chemical rooms outside of containment basins. Chemical feed pumps shall be located within the containment basin. Piping shall be designed to minimize or contain chemical spills in the event of pipe ruptures.

(e) Be located above grade, except if this requirement is waived by the department.

(f) Be located in accordance with s. NR 811.48 (5) if gas chlorine feeders are used.

(g) Be located in accordance with s. NR 811.51 (2) if fluorosilicic acid is used.

(4) CONTROL. Chemical feeders shall be controlled in accordance with the following requirements:

(a) Feeders may be manually or automatically controlled if the water supply pumps are manually controlled. Where pumps are automatically controlled, the feeders shall be automatically controlled. In all cases, automatic control shall be capable of reverting to manual control when necessary.

(b) The operation of the chemical feed pumps shall be interlocked with the operation of the appropriate well or service pump. Any controlled electrical outlet used for any chemical feed pump shall be clearly marked.

(c) Secondary control of chemical feed equipment shall be provided for fluoride chemical feed equipment in accordance with s. NR 811.51 (4) or when required by the department.

(d) Feeders shall be designed and controlled to provide chemical feed rates proportional to flow and for variable flow rates shall be paced by a water meter.

(e) Automatic chemical feed rate control in combination with residual analyzers which have alarms for critical values and SCADA system reporting or recording charts may be used.

(5) SOLUTION TANKS. The requirements for solution tanks, in s. NR 811.40 on storage and handling apply.

(6) WEIGHING SCALES. Weighing scales shall meet the following requirements:

(a) Be provided for weighing cylinders at all plants utilizing chlorine gas.

Note: It is recommended that indicating and recording type scales be used.

(b) Be required for other solution feed unless comparable means for determining usage is approved by the department.

(c) Be required for volumetric dry chemical feeders.

(d) Be accurate enough to measure increments of 0.5% of load.

(7) FEED LINES. Feed lines shall meet the following requirements:

(a) Be as short as possible in length of run, of durable, corrosion resistant material, easily accessible throughout the entire length, protected against freezing, and readily cleanable.

(b) Slope upward from chemical source to feeder when conveying gases.

(c) Introduce corrosive chemicals in a manner to minimize potential for corrosion.

(d) Be designed consistent with scale-forming or solids-depositing properties of the water, chemical, solution, or mixture conveyed.

(e) Not carry chlorine gas under pressure beyond the chlorine feeder room.

(f) Include corporation stops and removable injection nozzles when application is into a pipe line of adequate diameter. Injection nozzles installed in a horizontal section of pipe shall be installed up into the bottom half of the pipe.

(g) Be color coded in accordance with s. NR 811.28 (6).

(8) SERVICE AND CARRIER WATER SUPPLY. Water used for dissolving dry chemicals, diluting liquid chemicals, operating chemical feeders or as carrier water to deliver chemicals to injection locations shall be from a safe, approved source with appropriate backflow prevention provided. The department may grant an exception in cases where the finished water quality will not be affected by addition of the chemical mixed with untreated water.

NR 811.40 Storage and handling. Specific requirements regarding storage and handling are provided in the sections covering the particular chemical. Storage and handling installations shall meet the following general requirements:

(1) STORAGE FACILITIES. Storage facilities shall meet the following requirements:

(a) Space shall be provided for at least 30 days of chemical supply, convenient and efficient handling, dry storage conditions, and a minimum of 1.5 truck loads storage volume where purchase is by truck load.

(b) Covered or unopened shipping containers shall be provided for storage unless the chemical is transferred into an approved covered storage unit. Solution tanks shall have overlapping or threaded covers that provide sanitary protection for the chemical being stored. Large tanks shall be covered and those with top access openings shall have either threaded covers or the openings shall be curbed and fitted with overlapping covers. Grommets, pipe seals, or other sanitary means shall be provided to create a sanitary seal where tubes, hoses, and pipes pass through the walls or covers of chemical storage tanks.

(c) Solution storage or day tanks supplying chemical feeders directly shall have at a minimum sufficient capacity for one day of operation. If the chemical solution is prepared from a powder or slurry, two–solution tanks shall be required if necessary to assure continuity of feed.

(d) Solution storage or day tanks supplying feeders directly shall have a maximum capacity such that daily chemical solution usage is a minimum of 5% of the tank capacity. The department may approve chemical container storage volumes that will allow daily chemical solution usage less than 5% of the tank capacity if supporting information is provided to the department and the chemical storage container is placed on a scale, or another department approved method is installed, to accurately determine daily chemical usage. Graduated lines shall not be used to determine daily chemical usage in cases where the daily use is less than 5% of the tank capacity. In any case, the maximum storage volume shall not exceed 45 days for sodium hypochlorite and 60 days for all other chemicals.

(e) Storage facilities shall be constructed of, or lined with, materials compatible with the chemical being handled.

(f) Mixing equipment shall be provided where necessary to assure a uniform chemical solution strength. Continuous mixing shall be provided to maintain slurries in suspension.

(g) Means shall be provided to accurately determine the amount of chemical applied either by measurement of the solution level in the tank or by weighing scales. Graduation lines shall be in increments of approximately 2% to 3% of tank capacity. A meter shall be provided on the water fill line to a fluoride saturator.

(h) For non-bulk tanks, suction lines shall extend into the tank through the tank cover. Chemical feed pumps shall be installed at a height above the maximum liquid level in the chemical storage tank. Flooded suctions, for bulk tanks and if necessary to prevent loss of prime, may be approved by the department on a case-by-case basis.

(i) Adequate means of draining tanks shall be provided, but there may be no direct connection between any drain piping and a sanitary sewer. Chemicals shall not be discharged directly to a storm sewer. Drain piping shall terminate at least 2 pipe diameters, but not less than 3 inches, above the overflow rim of a receiving sump, conduit or waste receptacle.

(j) Overflow pipes, if provided, shall be turned downward, be appropriately screened, have a free air break discharge and be located in a conspicuous location.

(k) If subsurface locations for solution or storage tanks are approved by the department, the tanks shall be free from sources of possible contamination and located to assure positive drainage for groundwater, accumulated water, chemical spills, and overflows.

(L) The design shall insure that incompatible chemicals are not stored or handled in common areas.

(m) All buried chemical solution lines and gas lines shall be installed within protective conduit piping. Each chemical solution line shall be placed in its own protective conduit piping.

Note: When the chemical feed equipment will not be installed near the point of chemical application it is recommended that chemical solution piping be installed within protective conduit from the chemical feed equipment to the point of chemical application.

(n) Gases from feeders, storage, and equipment exhausts shall be conveyed to the outside atmosphere above grade and remote from air intakes. Liquid storage tanks shall be vented to the outside but not through vents in common with day tanks.

(o) Permanent signs identifying the chemical for each fill tube shall be posted at chemical offloading areas. Permanent signs identifying the tank contents shall be posted adjacent to or on chemical storage tanks.

(p) Compliance with local, state, and federal safety codes, including department of commerce and OSHA codes, for other applicable chemical safety and handling requirements is required.

(2) HANDLING FACILITIES. Handling facilities shall meet the following requirements:

(a) Equipment shall be provided for measuring quantities of chemicals used to prepare feed solutions.

(b) Piping for chemicals shall be compatible with the chemical being conveyed.

(c) The following equipment shall be provided for each installation where chemicals are handled:

1. Where the eyes or body of any person may be exposed to injurious corrosive materials, suitable facilities for quick drenching or flushing of the eyes and body shall be provided as required in s. Comm 32.15.

2. Rubber gloves, protective clothing, and safety goggles that form a tight seal with the face shall be provided for each operator who prepares chemical solutions.

3. A dust respirator of the prescribed type shall be provided for handling dry chemicals if required in the respective material safety data sheet or s. Comm 32.15.

(d) Provision shall be made for the transfer of dry chemicals from shipping containers to storage bins or hoppers in such a way as to minimize the quantity of dust generated. Control shall be provided by use of one of the following:

1. Vacuum pneumatic equipment or closed conveyor systems.

2. Facilities for emptying shipping containers in special containers.

3. Exhaust fans and dust filters which place the hoppers or bins under negative pressure.

(e) Carts, elevators, or other appropriate means shall be provided for lifting chemical containers to minimize lifting by operators.

(f) Electrical equipment shall be used which will prevent explosions, particularly when using sodium chlorite and activated carbon. Equipment shall comply with ch. Comm 16.

(g) Procedures for disposing of empty bags, drums, carboys, or barrels shall minimize exposure to dusts or chemicals.

(h) Acids shall be kept in closed, acid-resistant shipping containers, or storage units. Transfer from shipping containers to solution or day tanks shall be through acid resistant hose or pipe by means of a transfer pump.

(3) CHEMICALS. All chemicals used to treat or produce potable water shall meet the following requirements:

(a) Shipping containers shall be fully labeled to include chemical name, purity, applicable NSF/ANSI standard approval in conformance with par. (b), concentration and supplier name and address.

(b) Chemicals shall meet the requirements of s. NR 810.09.

SUBCHAPTER VII, TREATMENT

NR 811.41 General treatment design. The design of treatment processes and devices shall depend on evaluation of the nature and quality of the particular water to be treated and the desired quality of the finished water. Treatment shall be provided by each supplier of water if necessary in order to ensure that the finished water supplied to consumers meets the primary maximum contaminant levels contained in ch. NR 809 and is not objectionable to an appreciable number of consumers. The requirements of specific treatment processes are provided in ss. NR 811.42 to 811.60.

NR 811.42 Treatment of water from surface water sources. Treatment of water from surface water sources shall meet the following requirements:

(1) GENERAL REQUIREMENTS. All public water supply systems drawing water from lakes, rivers, streams, or other surface water sources shall, after the water is drawn, treat the water as provided in this chapter. In general and at a minimum, this treatment shall include coagulation, sedimentation, and filtration plus disinfection or membrane filtration plus disinfection. Filtration is required in all cases. Total plant removal and inactivation shall provide a minimum 3-log inactivation of *Cryptosporidium* and *Giardia Lamblia* plus 4-log inactivation of viruses.

(2) TREATMENT REQUIREMENTS. The following treatment requirements shall be met:

(a) Conventional plants consisting of coagulation, sedimentation, and filtration that meet the turbidity requirements in s. NR 810.29 (1) are granted the following removal credits: 2.5-log *Giardia Lamblia*, 3.0-log *Cryptosporidium* and 2-log virus. The remaining 0.5-log *Giardia Lamblia* inactivation and 2.0-log virus inactivation shall be provided by CT disinfection. For conventional plants, a minimum of one-half of the required CT shall be provided after filtration.

(b) Log removal credit for membrane filtration shall be site specific as approved by the department.

(c) Additional treatment may be required by the department as provided in s. NR 810.35.

(d) The department may approve any request for a deviation from required treatment methods based on data which shows that the requirements of this chapter are unnecessary in the specific case.

(3) REDUNDANCY. All critical treatment components shall be provided with redundancy.

(4) CT VALUES. CT values for the inactivation of *Giardia Lamblia*, *Cryptosporidium*, and viruses can be found in ss. NR 810.47 to NR 810.62.

(5) CHLORINE RESIDUAL REQUIREMENTS. The free chlorine concentration in the water entering the distribution system shall be at least 0.2 mg/1 at the entry point to the distribution system and detectable throughout the distribution system or the total combined chlorine concentration shall be at least 1.0 mg/l at the entry point to the distribution system and detectable throughout the distribution system. Continuous chlorine residual monitoring of the water entering the distribution system shall be provided as required in ss. NR 809.705 (2) and NR 810.38 (2) (c).

NR 811.43 Treatment of water from groundwater sources. Treatment of water from groundwater sources shall meet the following requirements:

(1) DISINFECTION CAPABILITY REQUIRED. All existing and new municipal water systems and all other-than-municipal water systems constructed or modified after the effective date of this subsection [legislative reference bureau inserts date] shall be provided with equipment and the necessary appurtenances which can continuously disinfect the water. The department may require the installation of disinfection equipment at existing other-than-municipal water systems if necessary to ensure a safe water supply.

(2) DISINFECTANT RESIDUAL REQUIREMENTS. Disinfection of water drawn from groundwater sources is to supplement and not replace proper well location, construction, and source protection. When disinfection of water drawn from a groundwater source is required to maintain bacteriologically safe water, the residual maintained in the distribution system and the residual monitoring is the same as that required for surface water in s. NR 811.42 (5).

(3) DISINFECTION REQUIREMENTS FOR WELLS. Specific disinfection requirements for wells are provided in subch. II. Any additional disinfection requirements for wells will be developed by the department if necessary on a case by case basis.

(4) DISINFECTION OF GROUNDWATER EXPOSED TO THE ATMOSPHERE. Disinfection of water drawn from groundwater sources shall be required in facilities which expose the

water to the atmosphere, such as open basins, open filters, air stripping towers, or gravity aerators.

(5) REQUIRED ACTIONS FOR WELLS WITH NON-COMPLYING WATER QUALITY. One of the following actions shall be taken after consulting with the department if untreated water drawn from a groundwater source exceeds one or more of the primary maximum contaminant levels in ch. NR 809 or a department health advisory:

(a) The well shall be removed from service and permanently abandoned.

(b) The well shall be removed from service and either reconstructed or provided with permanent treatment to provide complying water quality. Wells may temporarily continue in service without reconstruction or providing permanent treatment only as approved by the department. Department approval is required prior to reconstructing the well or providing water treatment. Under emergency conditions, the department may allow temporary use of a well from which bacteriologically contaminated groundwater is drawn if disinfection adequate to ensure safe water is provided. In such cases, disinfection measures meeting the requirements of sub. (3) shall be provided. A continuous boil water notice may be required by the department during all or part of this interim period if deemed necessary by the department to protect public health.

(6) GROUNDWATER UNDER THE DIRECT INFLUENCE OF SURFACE WATER. The department may allow the use of water drawn from a groundwater source that has been determined by the department to be under the direct influence of surface water provided that treatment facilities meeting the requirements of subch. II of ch. NR 810 are provided as approved by the department. The total plant removal and inactivation shall provide a minimum 3-log inactivation of *Cryptosporidium* and *Giardia Lamblia* plus 4-log inactivation of viruses. The disinfectant residual maintained in the distribution system and residual monitoring shall be the same as required for treatment of water drawn from a surface water source in s. NR 811.42 (5). The department may approve modified treatment requirements for other-than-municipal public water systems if surface water treatment is impractical and if sufficient treatment can be provided. The supplier of water shall contact the department to determine what modified treatment will be approved.

(7) REDUNDANCY. All critical treatment components shall be provided with redundancy.

(8) CT VALUES. CT values for the inactivation of *Giardia Lamblia*, *Cryptosporidium*, and viruses can be found in ss. NR 810.47 to NR 810.62.

NR 811.44 Pilot testing. Pilot testing is required to establish effective treatment and operation requirements for new treatment methods, if revisions are proposed to existing treatment methods, if the water quality poses significant treatment issues, and if design parameters need to be determined for the first time or for the specific site conditions. The department may waive the pilot testing requirement if information on other locations where the proposed treatment methods using similar water quality are already in place and operating successfully is available or if other justification necessary to support the proposed treatment processes is submitted to the department. Pilot testing shall address the following requirements:

(1) Plans, specifications, and an engineering report detailing the proposed pilot plant design, operation, sampling, lab analyses, and any waste disposal shall be submitted to the department and the written approval of the department shall be obtained prior to

constructing or operating the pilot plant. At minimum, the pilot plant proposal shall address the following issues, where they apply:

(a) Pilot plant treatment design including all operating parameters.

(b) Length of pilot plant operation. The pilot plant shall operate long enough to establish the treatment effectiveness, media run lengths, wastewater volumes and characteristics, and any other necessary operating parameters. The pilot plant shall operate through a minimum of two treatment cycles or as determined by the department.

(c) Chemicals and chemical feed equipment to be used along with chemical addition rates.

(d) Waste disposal.

(e) Operator safety.

(f) Backflow or back-siphon protection for any water system facilities that the pilot plant may be connected to.

(g) Pilot plant security.

(2) A report summarizing the results of the pilot plant testing and making recommendations for any full scale water system improvements shall be submitted to the department for review and comment by the owner or the owner's representative prior to or along with the submittal of plans and specifications for any permanent installations.

NR 811.45 Aeration. Aeration treatment devices described in this section may be used for oxidation, separation of gases, or for taste and odor control. Air stripping towers shall meet the requirements of s. NR 811.53 (2), which can be used for the removal or reduction of some volatile organic compounds. The following requirements shall be met:

(1) NATURAL DRAFT AERATION. The design for natural draft aeration shall provide that:

(a) Water is distributed uniformly over the top tray.

(b) Water is discharged through a series of 3 or more trays with separation of trays not less than 6 inches.

(c) Trays are loaded at a rate of one to 5 gallons per minute for each square foot of total tray area.

(d) Trays have slotted, heavy woven wire mesh with 0.5-inch openings or perforated bottoms.

(e) Perforations are $^{3}/_{16}$ to $^{1}/_{2}$ inches in diameter, spaced one to 3 inches on centers, when perforations are used.

(f) Construction is of durable material resistant to the aggressiveness of the water and dissolved gasses.

(g) Contamination from sources such as those listed is sub. (7) is minimized by providing down-turned, louvered or hooded, screened air inlet or outlet openings. Screens shall be constructed of 24-mesh corrosion resistant material.

(h) Exhaust air is discharged directly to the outside atmosphere and in a location that will be protective of public health.

(2) FORCED OR INDUCED DRAFT AERATION. The design for forced or induced draft aeration shall provide that:

(a) Water is distributed uniformly over the top tray.

(b) The blower and blower motor are weatherproof and are installed in a weather-tight, screened enclosure.

(c) There is an adequate countercurrent flow of air through the enclosed aeration column.

(d) Aerator trays are loaded at a rate of one to 5 gallons per minute for each square foot of total tray area.

(e) Water will discharge through a series of 5 or more trays with separation of trays not less than 6 inches or as approved by the department.

(f) Construction is of durable material resistant to the aggressiveness of the water and dissolved gasses.

(g) The aerator is insect-proof, watertight, and light-proof.

(h) The air intake is located above grade and the air introduced into the column is as free as possible from contamination sources such as those listed in sub. (7).

(i) The water outlet is adequately sealed to prevent unwanted loss of air.

(j) Interior and exterior sections of the aerator can be easily reached or removed for maintenance.

(k) Contamination from sources such as those listed in sub. (7) is minimized by providing down-turned, louvered or hooded, screened air inlet or outlet openings. Screens shall be constructed of 24-mesh corrosion resistant material.

(L) Exhaust air is discharged directly to the outside atmosphere and in a location that will be protective of public health.

(3) PRESSURE AERATION. Pressure aeration installations shall meet the following requirements:

(a) Pressure aeration may be used for oxidation purposes. Pressure aeration will not be approved for removal of dissolved gases.

(b) Filters following pressure aeration shall be provided with adequate exhaust devices for release of air.

(c) Pressure aeration devices shall be designed to cause a thorough mixing of compressed air with the water being treated.

(d) Pressure aeration devices shall provide screened and filtered air that is free of obnoxious fumes, dust, dirt, and other contaminants.

(e) Air compressors supplying pressure aerators shall be oil-less.

(4) OTHER METHODS OF AERATION. Other methods of aeration may be approved by the department only if a pilot plant study conducted in accordance with s. NR 811.44 demonstrates the method's effectiveness. Methods include spraying, diffused air, and mechanical aeration. The treatment processes shall be designed to meet the particular needs of the water to be treated.

(5) DISINFECTION. Aerated water other than from pressure aeration shall receive continuous disinfection treatment. A corporation stop shall be provided on the inlet piping to all non-pressure aerators to allow disinfection for emergency or maintenance purposes.

(6) PROTECTION FROM WIND. Aerators that discharge through the atmosphere shall be protected by being placed in a louvered enclosure designed to provide easy access to the interior.

(7) PROTECTION FROM CONTAMINATION. Aerators that are used for oxidation or removal of dissolved gases from waters that will be given no further treatment other than

chlorination shall be protected from contamination from insects and birds, obnoxious fumes, all types of precipitation and condensation, and windborne debris or dust.

(8) BYPASS PIPING. Bypass piping and any associated valves or other appurtenances shall be installed to allow water to be bypassed around a non-pressure aerator unless the aerator is necessary to comply with primary maximum contaminant levels or the requirement is waived by the department because the water system has access to other water sources that can provide at least an average day supply of water.

(9) REDUNDANCY. Redundant aeration systems shall be provided for units installed to comply with primary maximum contaminant levels unless the requirement is waived by the department because the water system has access to other water sources that can provide at least an average day supply of water.

(10) WATER QUALITY. A metal smooth-end sampling faucet installed on the aerator outlet piping and test equipment shall be provided to test for appropriate water quality parameters following aeration such as dissolved oxygen, pH, iron, manganese, radon gas, and carbon dioxide when required by the department to insure proper operation of the aeration equipment.

NR 811.46 Arsenic removal. The following minimum requirements shall be met when the following treatment methods are employed for arsenic removal:

(1) PILOT TESTING. All process designs shall be based on information from a pilot study unless waived by the department based upon previous demonstration that the process design will effectively remove arsenic based upon the water quality to be treated. Documentation shall be submitted to the department to support any pilot test waiver.

(2) OXIDATION AND FILTRATION. Arsenic III shall be oxidized by chemical or physical processes or both to arsenic V and then filtered out.

(a) Adequate detention time shall be provided if necessary to complete the conversion to arsenic V before filtration.

(b) Ferric chloride or ferric sulfate shall be added to the water supply for water with less than a 20 to 1 ratio of iron to arsenic if necessary in order to provide adequate arsenic removal efficiency.

(3) ADSORPTIVE MEDIA. Metal oxide coated adsorptive media may be used as the sole means of removing arsenic or in cooperation with or as a polishing unit after oxidation and filtration of arsenic.

(a) The adsorptive media shall be NSF/ANSI Standard 61 approved in accordance with s. NR 810.09 (1) (c).

(b) The pilot study and final design shall address the following issues:

1. Pre- and post-filtration adjustment of pH to enhance the arsenic removal rate and reduce water corrosivity.

2. Conversion of the arsenic III to arsenic V prior to filtration.

3. Oxidation and filtration of iron and manganese to prevent fouling of the media.

4. Concentrations of sulfate and dissolved solids in the source water and the need to remove or reduce the concentrations in order to maintain treatment efficiency and minimize media fouling.

(4) OTHER ACCEPTABLE TREATMENT METHODS. Coagulation and filtration, anion exchange, electrodialysis, membrane filtration, and lime softening are treatment methods that may also be used to remove arsenic. The pilot study and final design shall address the following issues, if applicable:

(a) Pre- and post-treatment adjustment of pH to enhance the arsenic removal rate, prevent scaling, or fouling of the treatment equipment, and reduce water corrosivity.

(b) Conversion of the arsenic III to arsenic V prior to removal.

(c) Oxidation and filtration of iron and manganese to prevent fouling of the treatment equipment.

(d) The use of ferric chloride, ferric sulfate, alum, or a polymer as coagulant aids.

(e) Concentrations of sulfate and dissolved solids in the source water and the need to remove or reduce the concentrations in order to maintain treatment efficiency and minimize treatment equipment fouling.

NR 811.47 Clarification. Plants designed to reduce suspended solids concentrations prior to filtration shall:

(1) Provide a minimum of 2 units each for rapid mix, flocculation and sedimentation.

(2) Permit operation of the units either in series or parallel.

(3) Be constructed to permit units to be taken out of service without disrupting operation with drains or pumps sized to allow dewatering in a reasonable period of time.

(4) Provide multiple-stage treatment facilities if required by the department.

(5) Be started manually following shutdown.

(6) Minimize hydraulic head losses between units to allow future changes in processes without the need for repumping.

(7) Meet the following specific requirements:

(a) *Presedimentation.* Waters containing high turbidity or having unusual treatment requirements may require pretreatment, usually sedimentation or detention either with or without the addition of coagulation chemicals.

1. 'Basin design.' Presedimentation basins shall have the following:

a. Hopper bottoms or be equipped with continuous mechanical sludge removal apparatus, and provide arrangements for dewatering.

b. Cover or superstructure.

2. 'Inlet.' Incoming water shall be dispersed across the full width of the line of travel as quickly as possible. Short circuiting shall be prevented.

3. 'Bypass.' Provisions for bypassing presedimentation basins shall be included.

4. 'Detention time.' Three hours detention is the minimum period required for presedimentation. Greater detention may be required in individual cases of chemical pretreatment.

5. 'Raw water samples.' A means for collecting raw water samples prior to any chemical addition shall be provided.

(b) *Rapid mix.* Mixing shall mean the rapid dispersion of chemicals throughout the water to be treated, usually by violent agitation. For surface water plants using direct or conventional filtration, the use of a primary coagulant is required at all times.

1. 'Mixing.' The detention period shall not be more than thirty seconds with mixing equipment capable of imparting a minimum velocity gradient (G) of at least 750 feet per second per foot. The appropriate G value and detention time shall be determined through jar testing.

2. 'Equipment.' Basins shall be equipped with mechanical mixing devices unless other methods, such as baffling, or injection of chemicals at a point of high velocity, are

approved by the department after determining that the other requirements of this chapter will be met. Variable speed drive equipment is recommended.

3. 'Location.' The rapid mix and flocculation basin shall be as close together as possible.

(c) *Flocculation – slow mixing.* Flocculation shall mean a process to enhance agglomeration or collection of smaller floc particles into larger, more easily settleable or filterable particles through gentle stirring by hydraulic or mechanical means.

1. 'Basin design.' Inlet and outlet design shall prevent short circuiting and destruction of floc. Series compartments shall be provided to minimize short-circuiting and to provide decreasing mixing energy with time. Basins shall be designed so that individual basins may be isolated without disrupting plant operation. A drain or pumps or both shall be provided to allow dewatering and sludge removal.

2. 'Detention.' Flow-through velocity may be not less than 0.5 nor greater than 1.5 feet per minute with a detention time for floc formation of at least 30 minutes. Tapered energy with diminishing velocity gradient shall be considered.

3. 'Equipment.' Agitators shall be driven by variable speed drives or other means which vary the peripheral speed of paddles in the range of 0.5 to 3.0 feet per second and the tip speed of vertical shaft impellors in the range of 6 to 10 feet per second. Uniform mixing shall be provided to prevent settling in the flocculation basin.

4. 'Piping.' Flocculation and sedimentation basins shall be as close together as possible. The velocity of flocculated water through pipes or conduits to settling basins may not be less than 0.5 nor greater than 1.5 feet per second. Allowances shall be made to minimize turbulence at bends and changes in direction.

5. 'Other designs.' Baffling may be used to provide flocculation only after approval by the department. The design shall be such that the velocities and flows in this section shall be maintained.

6. 'Superstructure.' A superstructure shall be provided over the flocculation basins.

(d) *Sedimentation.* Sedimentation shall follow flocculation. The detention time for effective clarification is dependent upon factors related to basin design as well as the nature of the raw water, such as turbidity, color and colloidal matter, and taste and odor causing compounds.

1. 'Detention time.' Plants with conventional sedimentation shall provide a minimum of 4 hours of settling time. This may be reduced to 2 hours for lime-soda softening facilities treating only groundwater. Also, reduced sedimentation time may be approved when equivalent effective settling is demonstrated or when overflow rate is not more than 0.5 gallons per minute per square foot.

2. 'Inlet devices.' Inlets shall be designed to distribute the water equally and at uniform velocities. Open ports, submerged ports, and similar entrance arrangements are required. A baffle shall be constructed across the basin, close to the inlet end, and project several feet below the water surface to dissipate inlet velocities and provide uniform flows across the basin.

3. 'Outlet devices.' Outlet devices shall be designed to maintain velocities suitable for settling in the basin and to minimize short circuiting. The use of submerged orifices is recommended in order to provide volume above the orifices for storage when there are fluctuations in flow.

4. ‘Weir overflow rate.’ The rate of flow over the outlet weir may not exceed 20,000 gallons per day per foot of weir length. If submerged ports or orifices are used as an alternate for overflow weirs, they may not be lower than 3 feet below the flow line with flow rates equivalent to weir loadings. The entrance velocity through the submerged orifices shall not exceed 0.5 feet per second.

5. ‘Drainage.’ Basins shall be provided with a means for dewatering. Basin bottoms shall slope toward the drain not less than one foot in 12 feet where mechanical sludge collection is not provided.

6. ‘Covers.’ Covers or superstructures are required at all plants. Where covers are used, access hatches shall be provided as well as drop light connections so that observation of the floc can take place at the inlet, midpoint and outlet of the basin.

7. ‘Velocity.’ The velocity through settling basins may not exceed 0.5 feet per minute. The basins shall be designed to minimize short circuiting. Fixed or adjustable baffles shall be provided as necessary to achieve the maximum potential for clarification.

8. ‘Overflow.’ An overflow weir or pipe shall be installed, which will establish the maximum water level desired on top of the filters. It shall discharge by gravity with a downturned pipe elbow a minimum of one foot above a concrete splash pad and shall be covered with 4-mesh corrosion resistant screen at a location where the discharge is visible and where the water can be appropriately drained.

9. ‘Safety.’ Guard rails shall be installed around openings which may be hazardous to maintenance personnel. Permanent holders or handholds shall be provided on the inside walls of basins above the water level.

10. ‘Sludge collection.’ Mechanical sludge collection equipment may be provided.

11. ‘Sludge removal.’ Facilities for disposal of sludge are required by the department. Sludge removal design shall provide:

a. Sludge pipes not less than 3 inches in diameter and so arranged as to facilitate cleaning.

b. Entrance to sludge withdrawal piping to prevent clogging.

c. Valves located outside the tank for accessibility.

d. Provisions for the operator to observe and sample sludge being withdrawn from the unit.

12. ‘Sludge disposal’. Sections NR 811.858 and 811.861 contain additional specific requirements for sludge disposal. Flushing lines or hydrants shall be provided to backflush sludge lines and basins or for other purposes. Protection shall be provided for all potable water lines used if potable water could become contaminated by nonpotable water.

(e) *Solids contact unit.* Units designed for combined softening and clarification, if water characteristics, especially temperature, do not fluctuate rapidly and flow rates are uniform and operation is continuous, may be used if specifically approved by the department. Units shall be designed for the maximum uniform rate and be adjustable to changes in flow, which are less than the design rate and for changes in water characteristics. A minimum of two units are required unless the department waives this requirement. For plants with multiple units, the rated capacity of the plant shall be available with one unit out of service.

1. ‘Installation of equipment.’ Supervision by a representative of the manufacturer shall be provided whenever mechanical equipment is installed and at the time of initial operation.

2. ‘Operating equipment.’ A complete outfit of tools and accessories shall be provided. Laboratory equipment to control the treatment process shall be provided at all waterworks. In addition, sampling taps with adequate piping located to permit the collection of samples of water from critical portions of the units shall be provided.

3. ‘Chemical feed.’ Chemicals shall be applied at points and by means as to ensure satisfactory mixing of the chemicals with the water.

4. ‘Mixing.’ Mixing devices employed shall be constructed to provide adequate mixing of the raw water with previously formed sludge particles and to prevent deposition of solids in the mixing zone. A rapid mix device or chamber ahead of the solids contact unit may be required by the department.

5. ‘Flocculation.’ Flocculation equipment shall be adjustable by speed, or pitch or both, provide for coagulation to occur in a separate chamber or baffled zone within the unit, and provide a flocculation and mixing period of not less than 30 minutes.

6. ‘Sludge concentrators.’ Sludge concentrators shall provide either internal or external concentrators in order to obtain a concentrated sludge with a minimum of wastewater.

7. ‘Sludge removal.’ Sludge removal design shall provide all of the following:

a. Sludge pipes not less than 3 inches in diameter, arranged to facilitate cleaning.

b. Entrance to sludge withdrawal piping to prevent clogging.

c. Valves located outside the tank for accessibility.

d. Facilities for an operator to observe or sample sludge being withdrawn from the unit.

8. ‘Cross-connections.’ Sludge blow-off outlets and drains shall terminate and discharge at places approved by the department. Cross-connection control shall be included for all potable water lines such as those used to backflush sludge lines or flush basins if potable water could become contaminated by nonpotable water.

9. ‘Detention period.’ The detention time shall be established on the basis of the raw water characteristics and local conditions that affect the operation of the unit. Based on design flow rates, the minimum detention time shall be 2 to 4 hours for suspended solids contact clarifiers and softeners treating surface waters, and one to 2 hours for the suspended solids contact softeners treating only groundwater.

10. ‘Suspended slurry concentrate.’ Softening units shall be designed so that continuous slurry concentrates of 1% or more, by weight, can be effectively maintained.

11. ‘Water losses.’ a. Units shall be provided with suitable controls for sludge withdrawal.

b. Total water loss may not exceed 5% for clarifiers or 3% for softening units.

c. Solids concentration of sludge discharged to waste shall be at least 3% by weight for clarifiers and 5% by weight for softeners.

12. ‘Weir or orifices.’ The units shall be equipped with either overflow weirs or orifices. Weirs shall be adjustable, at least equivalent in length to the perimeter of the tank, and constructed so that surface water does not travel over 10 feet horizontally to the collection trough.

13. ‘Weir or orifice loading.’ Weir loading may not exceed 20 gallons per minute per foot of weir length for units used for softeners, or 10 gallons per minute per foot of weir length for units used for clarifiers. Where orifices are used, the loading rate per foot shall be equivalent to weir loadings. Orifices or weirs shall produce uniform rising rates over the entire area of the tank.

14. ‘Upflow rates.’ Unless supporting data is submitted to the department and the department grants an exception, the following rates may not be exceeded:

a. 1.75 gallons per minute per square foot of area at the slurry separation line if units are used for softeners.

b. 1.0 gallon per minute per square foot of area at the sludge separation line if units are used for clarifiers.

(f) *Tube or plate settlers.* Proposals for settler unit clarification shall include pilot plant or a full scale demonstration or both satisfactory to the department prior to the preparation of final plans and specifications for approval. Settler units consisting of variously shaped tubes or plates which are installed in multiple layers and at an angle to the flow, may be used for sedimentation, following flocculation. Tube or plate settler installations shall meet the following:

1. ‘Inlet and outlet considerations.’ Design the inlets and outlets to maintain velocities suitable for settling in the basin and to minimize short-circuiting.

2. ‘Drainage.’ Drain piping from the settler units shall be sized to facilitate a quick flush of the settler units and to prevent flooding other portions of the plant.

3. ‘Protection from freezing.’ Units shall be located within a plant or within a covered basin.

4. ‘Application rate for tubes.’ A maximum application rate of 2 gallons per minute per square foot of cross-sectional area, unless higher rates are successfully shown through pilot plant or in-plant demonstration studies and are approved by the department.

5. ‘Application rate for plates.’ A maximum plate loading rate of 0.5 gallons per minute per square foot, based on 80 per cent of the projected horizontal plate area.

6. ‘Flushing lines.’ Flushing lines shall be provided to facilitate maintenance and shall be properly protected against backflow or back siphonage.

7. ‘Placement.’ Modules shall be placed in zones of stable hydraulic conditions and in areas nearest effluent launders for basins not completely covered by the modules.

8. ‘Inlets and outlets.’ Inlets and outlets shall conform with par. (d) 2. and 3.

NR 811.48 Chlorination. Chlorine installations shall meet the following requirements:

(1) CHLORINATION EQUIPMENT.

(a) *Type.* The following types of chemical feed equipment may be used to feed chlorine:

1. Solution-feed-gas-type chlorinators.

2. Hypochlorite feeders of the positive displacement type.

3. Digitally controlled constant stroke length positive displacement type.

4. Peristaltic type.

5. Tablet chlorinator type.

(b) *Capacity.* The chlorinator capacity shall be such that a free chlorine residual of at least 2 mg/1 can be attained in the water after a contact time of at least 30 minutes when

maximum flow rates coincide with anticipated maximum chlorine demands. Liquid chemical feed equipment shall be designed to operate in accordance with the requirements of s. NR 811.39 (2) (c). Solution-feed-gas-type chlorination chemical feed equipment shall be designed to operate between 30% and 70% of the rotameter capacity. This may require that 2 rotameters be provided, one for normal feed rates and one for emergency feed rates. For all chemical feed systems, the emergency feeder setting shall be designed to provide a minimum of 2 mg/l of chlorine.

(c) *Standby equipment.* Where chlorination is necessary for protection of the water supply, standby equipment of sufficient capacity shall be available to replace the largest unit during shut-downs. Spare parts shall be made available to replace parts subject to scaling, wear, and breakage.

(d) *Automatic proportioning.* Automatic proportioning chlorinators shall be required where the rate of flow of the water is not reasonably constant or where the rate of flow of the water is not manually controlled.

(2) POINT OF APPLICATION. Chlorine application points shall meet the following requirements:

(a) Chlorine shall be applied at a point which will provide the maximum contact time. Provisions shall be made to minimize short-circuiting.

(b) At plants treating surface water, piping provisions shall be made for applying chlorine to the raw water, settled or clarified water, filtered water, and the plant effluent.

(c) At plants treating groundwater, provision shall be made for applying chlorine to the raw water, the clearwell inlet, and the discharge piping as applicable.

(d) At plants treating groundwater where CT is required by the department, provision shall be made for applying chlorine to the raw water, at the inlet to all CT reservoir detention basins, and the high-lift pump discharge piping as required by the department.

(3) RESIDUAL TESTING EQUIPMENT. Chlorine residual testing equipment shall meet the following requirements:

(a) Chlorine residual testing methodology shall be as specified in NR 809.563 (2), Table R. The equipment shall enable measurement of residuals to the nearest 0.1 mg/1 in the range below 0.5 mg/1 and to the nearest 0.2 mg/1 between 0.5 mg/1 to 2.0 mg/1.

Note: It is recommended that all systems, at a minimum, use an instrument using the DPD colorimetric method with a digital readout and a self contained light source. Automatic chlorine residual pacers and recorders are recommended where the chlorine demand varies appreciably over a short period of time.

(b) Water systems that rely on chlorination for inactivation of bacteria or other microorganisms present in the source water shall have continuous chlorine residual analyzers and other equipment that automatically shut down the facility when the chlorine residuals required by the department are not met. The department may approve less than continuous monitoring for municipal water systems serving 3,300 or fewer people and other-than-municipal water systems on a case-by-case basis provided that replacement measures or practices are implemented to provide comparable public health protection.

(4) CHLORINATOR PIPING. The water supply piping shall be designed to prevent contamination of the treated water supply by sources of impure or unknown quality. Pipes carrying elemental liquid or dry gaseous chlorine under pressure shall be Schedule

80 seamless steel tubing or other materials recommended by the Chlorine Institute. PVC pipe may not be used. Chlorine solution piping and fittings shall be rubber, PVC, polyethylene, or other materials recommended by the Chlorine Institute.

(5) HOUSING. Chlorine gas feed and storage installations shall meet the following requirements:

(a) Chlorine gas feed and storage installations shall be separated from other operating areas by gas-tight rooms or enclosures in order to prevent injury to personnel and damage to equipment.

(b) Chlorine gas rooms shall be provided with a safety glass inspection window installed in an interior wall or exterior door to permit viewing of the interior of the room and the equipment.

(c) Chlorine gas rooms shall be provided with a minimum of one door having emergency or panic hardware opening outward to the building exterior. Rooms may have additional doors to the building exterior.

(d) Chlorine gas rooms shall be heated to prevent freezing and insure proper operation of the equipment.

(e) Chlorine gas cylinders shall be provided with restraints to prevent movement of the cylinders.

(f) Full and empty cylinders of chlorine gas shall be:

1. Isolated from operating areas.
2. Restrained in position to prevent movement of the cylinders.
3. Stored in rooms separate from ammonia storage.
4. Stored in areas not in direct sunlight or exposed to excessive heat.

(g) Pressurized chlorine feed lines may not carry chlorine gas beyond the chlorine room. Vacuum chlorine feed lines may carry gas beyond the chlorine room if the chlorine lines are either schedule 40 polyethylene tubing or schedule 80 PVC pipe. Polyethylene tubing shall be enclosed in a protective conduit running from the chlorine room to a point near the ejector. The end of the conduit in the chlorine room shall be sealed. Polyethylene tubing connections shall be made using tube adaptors especially designed for this purpose. PVC pipe joints may be socket welded using PVC cement or threaded using TFE tape.

(h) Premanufactured chlorine cabinets may be used for retrofit situations only. These cabinets shall have an observation window, fan, air intake, and light as required in par. (b) and sub. (6) for normal chlorine gas rooms. It is recommended that these cabinets not be placed on the sunny side of the building.

(6) VENTILATION OF CHLORINE GAS ROOMS. Ventilation of chlorine gas rooms shall meet the following requirements:

(a) One complete air change per minute shall be provided when the room is occupied.

(b) The exhaust fan suction shall be near the floor as far as practical from the door and air inlet, with the point of discharge located to avoid contamination of air inlets to other rooms and structures, and to avoid being blocked by snow or other obstructions.

(c) Air inlets shall be located near the ceiling and controlled to prevent adverse temperature variations.

(d) Louvers for the chlorine room air intake and exhaust shall be corrosion resistant and shall facilitate airtight closure.

(e) The exhaust fan switch shall be located outside the entrance to the chlorine room with a signal light indicating fan operation when the fan can be controlled from more than one point. Outside switches shall be protected from vandalism. As an alternative, the fan may be controlled by an automatic door switch with manual shut-off.

Note: It is recommended that switches for fans and lights be interlocked for simultaneous operation.

(f) Vent lines from feeders and storage shall discharge to the outside atmosphere, above grade, in a downward direction, be screened, and be located as required in par. (b). In addition, vent lines shall conform with the manufacturer's installation recommendations.

(7) SAFETY EQUIPMENT. The following safety equipment shall be provided when chlorine gas is used:

(a) Respiratory protection equipment, known as gas masks, meeting the requirements of the National Institute for Occupational Safety and Health (NIOSH) shall be available where chlorine gas is handled, and shall be stored at a convenient heated location, but not inside any room where chlorine is used or stored. The gas masks shall use compressed air, have at least a 30 minute capacity, and be compatible with or exactly the same as the gas masks used by the fire department responsible for the plant. The gas masks shall be available at all installations where chlorine gas is handled and shall be placed outside every room where chlorine gas is used or stored. At installations utilizing 100- or 150-pound cylinders, an agreement with the local fire department which has an approved type of gas mask for the fire department to handle water system chlorine gas leaks may be approved by the department. Instructions for using, testing and replacing gas mask parts shall be posted. Other protective clothing shall be provided as necessary.

(b) A bottle of concentrated ammonium hydroxide, 56 per cent ammonia solution, shall be available for chlorine leak detection.

(c) If pressurized chlorine gas is present, continuous chlorine leak detection equipment shall be installed and equipped with both an audible alarm and a warning light. Automatic emergency chlorine cylinder shutdown valves shall also be provided.

(d) If ton cylinders are used, leak repair kits, approved by the Chlorine Institute, shall be available at the waterworks or a nearby fire department.

(8) AMMONIATION. Housing and ventilation for ammoniation shall meet the requirements in subs. (5) and (6) for chlorine. However, the fan inlet shall be near the ceiling and the fresh air inlet shall be near the floor. Ammonia storage and feed facilities shall be separate from chlorine facilities because of the combustion hazard. A plastic bottle of hydrochloric acid shall be available and used for leak detection.

(9) CALCIUM HYPOCHLORITE TABLET CHLORINATORS. Calcium hypochlorite tablet chlorinators shall meet the following design requirements:

(a) *Calcium hypochlorite solution formation.* The calcium hypochlorite solution shall be produced by dissolving tablets with a department approved feed water source using an erosion chamber or an upward directed spray system. The department may approve other methods or technology for producing calcium hypochlorite solution after the submittal of data from a department-approved pilot program.

(b) *Tablets.* The calcium hypochlorite tablets used in the chlorinator shall be supplied by the manufacturer of the tablet chlorinator equipment. The supplier of the calcium

hypochlorite tablets shall have obtained NSF/ANSI Standard 60 certification for the tablets in accordance with s. NR 810.09.

(c) *Tablet hoppers* 1. The tablet hopper shall be sized to provide a minimum of two days of supply assuming average day consumption of the tablets.

2. Load cells shall be provided on the hopper so that the weight of the tablets consumed in a 24-hour period can be determined. The design shall allow for collection of the data necessary to determine the theoretical daily chlorine usage. The design shall allow any solution to be drained out of the hopper before weighing the tablets. The load cell equipment shall be capable of providing an alarm when the weight of the tablets approaches a one day supply based upon an average day use. The alarm signal shall be automatically annunciated by the water system controls. A local alarm shall be sounded or signaled by an exterior red light at the pump station if the operation of the pump station is not remotely controlled.

3. The tablet hopper shall include a screened air-vacuum relief device if the possibility of a vacuum condition could develop during the operation of the tablet chlorinator.

(d) *Solution tank* 1. The open area for any pipe penetration through the walls of the solution tank shall be sealed sanitarily so that insects and foreign material cannot contaminate the chlorine solution.

2. The on and off operation of the process to produce chlorine solution from the tablets shall be controlled by float switches or sensors located in the solution tank.

3. Float switches or sensors shall be installed and wired to provide automatic shut-off and operator alarms for low and high solution level conditions. The shut-off and alarm signals shall be automatically annunciated by the water system controls. A local alarm shall be sounded or signaled by an exterior red light at the pump station if the operation of the pump station is not remotely controlled.

4. The tank shall be capable of being drained for maintenance purposes.

5. The solution tank shall be sized to keep an adequate supply of calcium hypochlorite in the tank at all times based upon the capabilities of the tablet chlorinator to produce solution and the chemical feed pump withdrawal rates necessary to achieve the required dosages.

(e) *Feed water piping requirements.* 1. The flow rate and pressure of the feed water piping shall be regulated so as to meet the design flow requirements provided by the supplier of the equipment. A shut-off valve, flow meter, and pressure gauge shall be installed on the feed water piping.

2. Pre-treatment devices shall be installed as necessary if the feed water does not meet the water quality requirements designated for the tablet chlorinator. Any pre-treatment device shall be compatible for use in a potable water system and shall not be used unless approved by the department. A strainer-filter shall be installed on the feed water piping, if necessary.

3. A check valve shall be installed on the feed water piping upstream of any treatment equipment, control valve, or solenoid valve.

4. A solenoid valve shall be installed on the feed water piping to control the flow of water into the tablet chlorinator. The operation of the solenoid valve shall be controlled based upon float switches or sensors located in the solution tank.

5. Erosion type tablet chlorinators shall be provided with a control valve capable of regulating the flow of water through the erosion cell. The submittal for review to the

department for an erosion-type tablet chlorinator shall include the chlorine delivery rate versus flow rate curve for the specified model.

(f) *Chemical feed pumps.* 1. The chemical feed pump shall be wired to operate in association with the well or service pump as required by s. NR 811.39 (4).

2. A tablet chlorinator producing calcium hypochlorite solution shall use a chemical feed pump installed in compliance with s. NR 811.39 (2), or a centrifugal pump.

3. Centrifugal pumps shall be sized to match or exceed the maximum head condition at the point of injection.

4. Flow paced chemical feed pumps installed in compliance with s. NR 811.39 (2) or centrifugal pumps with variable speed motors shall be incorporated into the design if the flow rate of the water being treated may vary based upon automatic control of the well or service pump. The requirements of s. NR 811.39 (2) (d) shall be met.

(g) *Chemical injection location.* 1. Tablet chlorinator chemical feed pumps shall discharge at locations and in a manner that complies with the installation requirements of s. NR 811.39 (2) (f).

2. When a centrifugal pump will discharge at a point not under continuous positive pressure, the outlet piping between the centrifugal pump and the point of chemical injection shall be installed with a vertical pipe loop that will extend to a height that is a minimum of 12 inches above the top of the solution tank and the location of the chemical addition pipe connection with the water system piping. A vacuum relief valve shall be installed on the top of the pipe loop. As an alternative to the installation of a vertical pipe loop, an electrically operated shut-off valve on the outlet piping, wired to operate in series with the operation of the well or service pump motor and the chemical feed pump, may be installed.

(h) *Centrifugal pump discharge piping*. The outlet piping of a centrifugal pump shall also be provided with a check valve and a manually operated shut-off valve. These valves shall be installed upstream of any pipe loop or electrically operated shut-off valve as required by par. (g) 2.

(10) SODIUM CHLORITE FOR CHLORINE DIOXIDE GENERATION. Proposals for the storage and use of sodium chlorite shall be submitted to the department for approval. Department approval shall be obtained prior to the preparation of final plans and specifications. Provision shall be made for proper storage and handling of sodium chlorite to eliminate any danger of fire or explosion.

(a) *Storage.* 1. Sodium chlorite shall be stored by itself in a separate room and preferably shall be stored in an outside building detached from the water treatment facility. Sodium chlorite shall be stored away from organic materials with which it could react violently.

2. Storage structures shall be constructed of noncombustible materials.

3. If the storage structure is located in an area where a fire may occur, water shall be available to keep the sodium chlorite area cool enough to prevent heat induced explosive decomposition of the sodium chlorite.

(b) *Handling.* 1. Care shall be taken to prevent spillage of sodium chlorite.

2. An emergency plan of operation shall be available for the clean up of any spillage.

3. Storage drums containing sodium chlorite shall be thoroughly flushed and the waste shall be discharged to an acceptable location prior to recycling or disposal.

(c) *Feeders.* 1. Chemical feed pumps shall meet the requirements of s. NR 811.39 (2).

2. Tubing for conveying sodium chlorite or chlorine dioxide solutions shall be Type 1 PVC, polyethylene or materials recommended by the manufacturer.

3. Chemical feeders may be installed in chlorine gas rooms if sufficient space is provided or in separate rooms meeting the requirements of subs. (5) and (6).

4. Feed lines shall be installed in a manner to prevent formation of gas pockets and shall terminate at a point of positive pressure.

5. Check valves shall be provided to prevent the backflow of chlorine into the sodium chlorite line.

NR 811.49 Filtration – gravity. The application of any type of gravity filter and media shall be supported by water quality data representing a period of use sufficient to characterize any variations in water quality. Experimental or pilot plant treatment studies may be required to demonstrate the applicability of the method or rate of filtration proposed. Pressure filters will not be approved for surface water applications. The following specific requirements shall be met:

(1) RAPID RATE GRAVITY FILTERS. (a) *Pretreatment.* Rapid rate gravity filters may only be utilized after coagulation, flocculation and sedimentation.

(b) *Number.* At least 2 filter units shall be provided. Provisions shall be made to meet the plant design capacity at the approved filtration rate with one filter out of service. If only 2 units are provided, each shall be capable of meeting the plant design capacity, normally the projected maximum daily demand.

(c) *Rate of filtration.* The permissible rate of filtration shall be determined after consideration of factors such as raw water quality, degree of pretreatment provided, filter media, water quality control parameters, competency of operating personnel and other factors required by the department. If effective coagulation, flocculation, sedimentation and filtration processes are to be utilized with relatively clean water sources, the following filtration rates may be approved:

Filtration Rate	**Filter Media Type**
2 gpm/ft^2	Single Media
3 gpm/ft^2	Dual Media
4 gpm/ft^2	Tri Media

In all cases, the filtration rate shall be proposed and justified by the design engineer and shall be approved by the department prior to the preparation of final plans and specifications. Higher rates than indicated in this paragraph may be approved with sufficient justification by the design engineer.

(d) *Structural details and hydraulics.* The filter structure shall be designed to provide:

1. Vertical walls within the filter.

2. No protrusion of the filter walls or other structures into the filter media or the area between the top of the media and the high water line during backwashing.

3. Cover by superstructure.

4. Head room to permit normal inspection and operation.

5. Minimum filter box depth of 8.5 feet.

6. Minimum water depth over the surface of the media of 3 feet.

7. Trapped effluent pipe to prevent backflow of air to the bottom of the filters.

8. Prevention of floor drainage to the filter with a minimum 4-inch curb around the filters.

9. Prevention of flooding by providing an overflow if this is not provided in a pretreatment unit.

10. Maximum velocity of treated water in the pipe and conduits to the filter of 2 feet per second.

11. Cleanouts and straight alignment for influent pipes or conduits where solids loading is heavy or following lime-soda softening.

12. Washwater drain capacity to carry maximum backwash flow.

13. Walkways around filters not less than 24 inches wide.

14. Safety handrails or walls around the filter areas adjacent to walkways. Consult local and state codes for requirements.

15. Construction to prevent cross connections and common walls between potable and nonpotable water.

16. Washwater troughs.

(e) *Washwater troughs.* Washwater troughs shall be designed to provide:

1. A bottom elevation above the maximum level of expanded media during washing.

3. A 2-inch freeboard at the maximum rate of wash.

4. A top or edge which is all at the same elevation.

5. Spacing so that each trough serves the same number of square feet of filter area.

6. A maximum horizontal travel of suspended particles not exceeding 3 feet in reaching the trough.

(f) *Filter material.* The media shall be clean silica sand or other natural or synthetic media approved by the department and shall meet the following general requirements: a depth of not less than 24 inches; an effective size of the smallest material no greater than 0.45 mm to 0.55 mm, depending upon the quality of the raw water; a uniformity coefficient of the smallest material not greater than 1.65; a minimum of 12 inches of media with an effective size range no greater than 0.45 mm to 0.55 mm; and a specific gravity greater than other filtering materials within the filter. The following specific requirements shall be met:

1. ‘Sand.’ Sand shall have an effective size of 0.45 mm to 0.55 mm, a uniformity coefficient of not greater than 1.65, specific gravity greater than 2.5 and an acid solubility less than 5 percent.

2. ‘Anthracite.’ Filter anthracite shall consist of clean, hard, and durable anthracite coal particles of various sizes. Non-anthracite material may not be blended. Anthracite used as the only media shall have an effective size from 0.45 mm to 0.55 mm and a uniformity coefficient not greater than 1.65. Anthracite used to cap sand filters shall have an effective size from 0.8 mm to 1.2 mm and a uniformity coefficient not greater than 1.7. Effective size of anthracite for iron and manganese removal from potable groundwater shall be a maximum of 0.8 mm. Effective sizes greater than 0.8 mm may be approved by the department based upon onsite pilot plant studies. Anthracite shall have a specific gravity greater than 1.4 and an acid solubility less than 5%.

3. ‘Granular activated carbon (GAC).’

a. Granular activated carbon as a single media may be considered only after pilot or full scale testing and with prior approval of the department.

b. The media shall meet the basic specifications for filter media as provided in this paragraph except that larger size media may be allowed by the department where full scale tests have demonstrated that treatment goals can be met under all conditions.

c. There shall be provisions for a free chlorine residual and adequate contact time in the water following the filters and prior to distribution.

d. There shall be means for periodic treatment of filter material for control of bacterial and other growth.

e. Provisions shall be made for frequent replacement or regeneration of granular activated carbon if used for filtration.

4. 'High density sand.' High density sand shall consist of hard durable, and dense grain garnet, ilmenite, hematite, magnetite, or associated minerals of those ores that will resist degradation during handling and use and shall meet all of the following:

a. Contain at least 95% of the associated material with a specific gravity of 3.8 or higher.

b. Have an effective size of 0.2 to 0.3 mm.

c. Have a uniformity coefficient of not greater than 1.65.

d. Have an acid solubility less than 5%.

5. 'Other media.' Other media may be approved, but only on the basis of pilot tests and experience which demonstrate that the requirements of this chapter will be met.

6. 'Supporting media.' Torpedo sand and gravel shall be provided as supporting media except when proprietary filter bottoms are used. In that case, the department, on the basis of substantiating information provided by the owner, may allow elimination of certain layers of supporting media or a reduction in the depth of the layers. Otherwise, the following apply:

a. A 3-inch layer of torpedo sand shall be used as a supporting media for the filter sand. The torpedo sand shall have an effective size of 0.8 mm to 2.0 mm, and a uniformity coefficient not greater than 1.7.

b. Gravel, when used as the supporting media, shall consist of hard, rounded silica particles and may not include flat or elongated particles. The coarsest gravel shall be 2.5 inches in size when the gravel rests directly on the strainer system, and shall extend above the top of the perforated laterals or strainer nozzles. Not less than 4 layers of gravel shall be provided in accordance with the following size and depth distribution when used with perforated laterals or strainer nozzles. Reduction of gravel depths may be considered upon justification to the department when proprietary filter bottoms are specified.

Gravel Size	Gravel Depth
2 1/2 to 1 1/2 inches	5 to 8 inches
1 1/2 to 3/4 inches	3 to 5 inches
3/4 to 1/2 inches	3 to 5 inches
1/2 to 3/16 inches	2 to 3 inches
3/16 to 3/32 inches	2 to 3 inches

(g) *Filter bottoms and strainer systems.* Departures from these standards by using proprietary bottoms may be approved by the department on a case-by-case basis if the effectiveness of the method is demonstrated. Porous plate bottoms may not be used where iron or manganese may clog them or with waters softened by lime. The design of manifold type collection systems shall:

1. Minimize loss of head in the manifold and laterals.

2. Assure even distribution of washwater and even rate of filtration over the entire area of the filter.

3. Provide a ratio of the area of the final openings of the strainer systems to the area of the filter of about 0.003.

4. Provide a total cross-sectional area of the laterals about twice the total area of the final openings of the strainer system.

5. Provide a cross-sectional area of the manifold at 1.5 to 2 times the total cross-sectional area of the laterals.

6. Lateral perforations without strainers shall be directed upwards.

(h) *Surface wash.* Surface wash facilities consisting of either fixed nozzles or a revolving mechanism are required unless air scour equipment is provided. All surface wash devices shall be designed with:

1. Water pressures of at least 45 psi.

2. Volume of flow of 2.0 gallons per minute per square foot of filter area with fixed nozzles and 0.5 gallons per minute per square foot with revolving arms.

3. A vacuum breaker installed above the high water elevation in the filter or other approved device to prevent back siphonage.

(i) *Air scouring.* Air scouring may be provided in place of surface wash. The following requirements apply:

1. Air flow for air scouring the filter shall be 2 to 5 standard cubic feet per minute per square foot of filter area when the air is introduced in the underdrain. Air scour distribution systems placed above the underdrains shall use the lower end of the range.

2. A method for avoiding excessive loss of the filter media during backwashing shall be provided.

3. Air scouring shall be followed by a fluidization wash sufficient to restratify the media.

4. Air shall be free from contamination.

5. Air scour distribution systems shall normally be placed below the media and supporting bed interface; if placed at the interface the air scour nozzles shall be designed to prevent media from clogging the nozzles or entering the air distribution system.

6. Piping for the air distribution system may not be flexible hose which will collapse when not under air pressure and may not be a relatively soft material which may erode at the orifice opening with the passage of air at high velocity.

7. Air delivery piping may not pass down through the filter media nor may there be any arrangement in the filter design which would allow short circuiting between the applied unfiltered water and the filtered water except if all of the following criteria are met:

a. The vertical piping is double wall, welded at top and bottom, schedule 40 stainless steel for the internal pipe and schedule 5 stainless steel for the external pipe.

b. The annulus between the double-wall is pressurized on-site to 80 psi.

c. An air connection to the double-wall annulus shall be provided including piping with a pressure gauge, regulator, flow switch and ball valve along with an air reservoir and compressor.

d. The flow switch shall alarm and trigger filter shutdown if a pressure drop of over 10 psi is detected.

8. The backwash delivery system shall be capable of 15 gallons per minute per square foot of filter surface area; however, when air scour is provided, the backwash rate shall be variable and may not exceed 8 gallons per minute per square foot unless operating experience shows that a higher rate is necessary to remove scoured particles from filter surfaces.

9. The filter underdrains shall be designed to accommodate air scour piping when the piping is installed in the underdrain.

10. Backwash facilities shall meet the requirements of par. (k).

(j) *Appurtenances.* The following shall be provided for every filter:

1. Sampling faucets on the influent and effluent lines.

2. Indicating loss-of-head gauge with appropriate cross-connection protection.

3. Indicating flow rate controls. A modified rate controller which limits the rate of filtration to a maximum rate may be used. However, equipment that simply maintains a constant water level on the filters will not be approved unless the rate of flow onto the filter is properly controlled. A pump in each filter effluent line may be used as the limiting factor for the rate of filtration only with approval from the department.

4. For surface water and groundwater under the direct influence of surface water, provisions for filtering to waste with appropriate measures for backflow prevention.

5. For surface water and groundwater under the direct influence of surface water, on-line continuous turbidimeters shall be installed on the effluent from each filter. All turbidimeters shall consistently determine and indicate the turbidity of the water in NTUs. Each turbidimeter shall report to a recorder that is designed and operated to allow the operator to accurately determine the turbidity at least every 15 minutes. Turbidimeters on individual filters shall be designed to accurately measure low-range turbidities and trigger an alarm when the effluent level exceeds 0.3 NTU. Access to the filter interior through wall sleeves shall be provided in several locations to allow the installation of sampling lines, pressure sensors and other devices, at different depths in the filter media.

6. A 1 to 1.5-inch pressure hose and rack at the operating floor for washing the filter walls.

(k) *Backwash.* Backwashing facilities shall be designed to provide:

1. A minimum rate of 15 gallons per minute per square foot, consistent with water temperatures and specific gravity of the filter media. A rate of 20 gallons per minute per square foot or a rate necessary to provide for a 50% expansion of the filter bed is recommended. A reduced rate of 10 gallons per minute per square foot may be acceptable for full depth anthracite or granular activated carbon filters. A reduced rate of backwashing is acceptable when air scouring is provided that meets the requirements of par. (i).

2. Backwashing by filtered water at the required rate from washwater tanks, a washwater pump from a reservoir or a high service main, or a combination of these.

3. Washwater pumps in duplicate unless an alternate means of obtaining washwater is available.

4. Backwashing of not less than 15 minutes wash of one filter at the design rate of wash.

5. A washwater regulator or valve on the washwater line to obtain the desired rate of filter wash with the washwater valves on the individual filters open wide.

6. A rate-of-flow indicator and totalizer on the main washwater line, located for convenient reading by the operator during the washing process.

7. Backwashing by a method which prevents rapid changes in the backwash water flow.

8. Backwash shall be operator initiated. Backwash systems with automated sequencing shall be operator adjustable.

(L) *Miscellaneous.* Roof drains may not discharge into the filters and basins or the conduits preceding the filters.

(2) SLOW RATE GRAVITY FILTERS. The use of slow rate gravity filters is not allowed without prior engineering studies to demonstrate the adequacy and suitability of this method of filtration for the specific raw water supply. The following standards shall be applied:

(a) *Quality of raw water.* Slow rate gravity filtration shall be limited to waters having maximum turbidities of 50 NTUs and maximum color of 30 units; turbidity may not be attributable to colloidal clay. Raw water quality data shall include examinations for algae.

(b) *Structural details and hydraulics.* Slow rate gravity filters shall be designed to provide:

1. Not less than 2 filter units. If only 2 units are provided, each shall be capable of meeting the plant design capacity, normally the projected maximum daily demand, at the approved filtration rate. If more than 2 filter units are provided, the filters shall be capable of meeting the plant design capacity at the approved filtration rate with one filter removed from service.

2. A cover or superstructure.

3. Headroom to permit normal movement by operating personnel for scraping and sand removal operations.

4. Adequate manholes and access ports for handling of sand.

5. Filtration to waste and overflow at the maximum filter water level.

(c) *Rates of filtration.* The permissible rates of filtration shall be based on the quality of the raw water as determined from experimental data. Proposed rates shall be submitted to the department for approval. The design rate shall be 45 to 150 gallons per day per square foot of sand area. However, the department may approve design rates of 150 to 230 gallons per day per square foot if effectiveness is demonstrated to the satisfaction of the department.

(d) *Underdrains.* Each filter unit shall be equipped with a main drain and an adequate number of lateral underdrains to collect the filtered water. The underdrains shall be so spaced that the maximum velocity of the water flow in the lateral underdrain will not exceed 0.75 feet per second. The maximum spacing of the laterals may not exceed 3 feet if pipe laterals are used.

(e) *Filtering material.* A minimum depth of 30 inches of filter sand, clean and free of foreign matter, shall be placed on graded gravel layers. The effective size shall be between 0.30 and 0.45 mm, and the uniformity coefficient may not exceed 2.5.

(f) *Filter gravel.* The supporting gravel shall conform to the size and depth distribution requirements in sub. (1) provided for rapid rate gravity filters.

(g) *Depth of water on filter beds.* The design shall provide a depth of at least 3 feet of water over the sand. Influent water shall be distributed in a manner which will not scour the sand surfaces.

(h) *Control appurtenances.* Each filter shall be equipped with:

1. A loss-of-head gauge.
2. An orifice, Venturi meter or other suitable metering device installed on each filter to enable measurement of the rate of filtration.
3. An effluent pipe located at an elevation which will maintain the water level in the filter above the top of the sand.

NR 811.50 Filtration – Membrane. Membrane technologies have a wide range of applications from the use of lower pressure membranes for removal of surface water contaminants such as *Giardia Lamblia* and *Cryptosporidium* to the use of reverse osmosis for desalination, inorganic compound removal, and radionuclide removal. The following specific requirements shall be met:

(1) TREATMENT OBJECTIVES. The selection of the specific membrane process shall be matched to the desired treatment objectives. The department shall be contacted to determine inactivation/removal credits for the specific membrane and treatment objective membranes to be used in treatment of surface water or groundwater under the direct influence of surface water.

(2) WATER QUALITY CONSIDERATIONS. A review of historical source raw water quality data, including turbidity or particle counts or both, seasonal changes, organic loading, microbial activity, and temperature differentials as well as other inorganic and physical parameters shall be conducted. The data shall be used to determine feasibility and cost of the system and the degree of pre-treatment. Design considerations and membrane selection at this phase shall also address the issue of target removal efficiencies and system recovery versus acceptable transmembrane pressure differentials. On surface water supplies, pre-screening or cartridge filtration may be required. The source water temperature shall be considered when establishing the design flux of the membrane under consideration and the number of treatment units to be installed. Seasonal variation of design flow rates may be based on documented lower demand during colder weather.

(3) PILOT TESTING. Prior to initiating the design of a membrane treatment facility, pilot testing shall be conducted. The pilot plant study shall be designed to identify the best membrane to use, need for pre- treatment, type of post- treatment, cold and warm water flux, backwash optimization, chemical cleaning optimization, fouling potential, operating and transmembrane pressure, integrity testing procedures, bypass ratio, amount of reject water, system recovery, process efficiency, particulate or organism removal efficiencies, and other design and monitoring considerations, each where applicable. The duration of the pilot testing shall be 9 to 12 months for microfiltration and ultrafiltration on surface water supplies and 2 to 7 months for reverse osmosis and nanofiltration on

groundwaters. The general protocol and sampling schedule shall follow the US EPA Membrane Filtration Guidance Manual.

(4) CHALLENGE TESTING. Membranes treating surface waters or groundwater under the direct influence of a surface water shall be challenge tested to establish a product specific maximum *Cryptosporidium* and *Giardia Lamblia* log removal credit. Challenge testing shall meet the requirements of s. NR 810.45 (2).

(5) PRETREATMENT. Pretreatment shall be as follows:

(a) *Microfiltration and ultrafiltration.* Pretreatment shall be designed to remove suspended solids and large particulate matter. The pretreatment may consist of a screen or strainer with a 200 to 500 micron rating. Chemicals used for pretreatment shall be certified for compliance with ANSI/NSF Standard 60.

(b) *Reverse osmosis and nanofiltration*. Pretreatment shall be provided where appropriate for turbidity reduction, iron or manganese removal, stabilization of the water to prevent scale formation, microbial control, chlorine removal for certain membrane types, and pH adjustment. At a minimum, cartridge filters shall be provided for the protection of the reverse osmosis or nanofiltration membranes against particulate matter.

(6) MEMBRANE MATERIALS. Two types of membranes may be used for reverse osmosis and nanofiltration. These are cellulose acetate based and polyamide composites. Microfiltration and ultrafiltration membranes may be organic polymers such as: cellulose acetate, polysulfones, polyamides, polypropylene, polycarbonates or polyvinylidene. The physical configurations may include: hollow fiber, spiral wound or tubular. Membrane materials shall be compatible with any pre-oxidants.

(7) USEFUL LIFE OF MEMBRANES. The life expectancy of a particular membrane under consideration shall be evaluated during the pilot study or from other relevant available data.

(8) BACKWASHING. Automated periodic backwashing shall be provided for microfiltration and ultrafiltration on a timed basis or once a target transmembrane pressure differential or a high resistance have been reached. Back flushing volumes may range from 5% to 15% of the permeate flow depending upon the frequency of flushing or cleaning and the degree of fouling. The back flushing volumes shall be considered in the treatment system sizing and the capacity of the raw water source. For systems using pressurized air, the compressors shall utilize food grade oil and filters shall be provided to prevent oil from reaching the membranes. Chemically enhanced backwash systems shall be protected from cross connections and shall be followed by a regular backwash. Backwash wastes shall be disposed of in accordance with subch. XII.

(9) MEMBRANE CLEANING. A means shall be provided to allow for periodically cleaning the membrane. Cleaning shall include a soak type cleaning and may also include more frequent maintenance cleans. The cleaning process shall protect the raw and finished water from contamination. Cleaning chemicals, frequency and procedure should follow membrane manufacturer's guidelines. Some cleaning solutions require heated water. Cleaning chemicals shall be NSF/ANSI Standard 60 certified. Membrane cleaning shall be initiated by the operator. Waste streams from chemical cleaning shall be discharged to the sanitary sewer. Adequate space shall be provided for different or additional chemicals which may be required to adequately clean the membranes in the future.

(10) MEMBRANE INTEGRITY TESTING. A means shall be provided to conduct direct and indirect integrity testing to routinely evaluate membrane and housing integrity and overall filtration performance. Direct integrity testing may include pressure and vacuum decay tests for microfiltration and ultrafiltration and marker-based tests for nanofiltration and reverse osmosis. The direct testing method shall allow for conducting tests at least once per day and may be required three times per day. Indirect monitoring options may include particle counters or turbidity monitors or both and shall allow for testing continuously. The testing methodology shall be approved by the department during startup procedures.

(11) MONITORING. Equipment shall be provided to monitor water quality, flow rates, and water pressure.

(a) *Water quality.* Sampling taps shall be provided to allow monitoring of water quality from the source water, from the water after any pretreatment, from the filtrate of each membrane unit, from the combined filtrate of all membranes, from the backwash, and prior to the entry to any clearwell.

(b) *Flow monitoring.* Water meters shall be provided to allow flow measurement from the source water, from the filtrate of each unit, from the combined filtrate of all units, from the backwash source, from any recirculation line, and from any waste line.

(c) *Pressure monitoring.* Pressure gauges shall be provided prior to the membrane units, after each membrane unit, and on the combined effluent of all membrane units.

(d) *Additional monitoring.* Additional monitoring points shall be provided as necessary to satisfy integrity testing requirements and operational reporting requirements of sub. (10) and s. NR 810.07.

(12) CROSS CONNECTION CONTROL. Cross connection control considerations shall be incorporated into the system design, particularly with regard to chemical feeds and waste piping used for membrane cleaning, waste stream and concentrate. Protection may include block and bleed valves on the chemical cleaning lines and air gaps on the drain lines.

(13) REDUNDANCY OF CRITICAL COMPONENTS. Redundancy of critical control components including but not limited to pumps, valves, air supply, chemical feed equipment and computers shall be provided.

(14) POST TREATMENT. Post treatment of water treated using reverse osmosis or nanofiltration shall be provided. Post treatment may consist of degasification for carbon dioxide, if excessive, and hydrogen sulfide removal, if present, pH and hardness adjustment for corrosion control, and disinfection as a secondary pathogen control and for distribution system protection.

(15) BYPASS WATER. The design shall provide for a portion of the raw water to bypass the unit to maintain stable water within the distribution system and to improve process economics as long as the raw water does not contain unacceptable contaminants. Alternative filtration shall be provided for bypassed surface water or groundwater under the direct influence of surface water.

(16) REJECT WATER. Reject volumes shall be evaluated in terms of the source availability and from the waste treatment availabilities. The amount of reject water from a unit may be reduced to a limited extent by increasing the feed pressure to the unit. Waste disposal from reverse osmosis or nanofiltration reject water shall discharge to a municipal sewer system, to waste treatment facilities, or to an evaporation pond.

(17) TREATMENT EFFICIENCY. The design treatment efficiency shall be determined by pilot testing.

(18) POWER CONSUMPTION. The power consumption of a particular membrane under consideration shall be evaluated during the pilot study or from other relevant data.

(19) CONTROL SYSTEMS.

(a) *Back-up systems.* Automated monitoring and control systems shall be provided with back-up power and operational control systems consisting of the following:

1. Dual running programmable logic controllers (PLCs) with synchronized programs and memory, or spare PLCs loaded with the most current program.
2. Spare input/output (I/O) cards of each type.
3. A minimum of 2 human machine interfaces (HMI).
4. Backup power supply including uninterruptible power supply (UPS).

(b) *Remote or unmanned operational control.* Systems designed for remote or unmanned control shall be provided alarms, communication systems, and automatic shutdown processes. The department shall be contacted to determine the extent of operational control required. At a minimum the following alarms shall be provided:

1. High raw or filtrate turbidity.
2. Pump failure.
3. High pressure decay test.
4. High transmembrane pressure.
5. PLC failure.
6. Membrane unit shutdown.
7. Clearwell level high or low.
8. Equipment failure.
9. High or low chlorine residual.
10. Low chemical level.
11. Power failure.
12. Building intrusion
13. Building low temperature.

NR 811.51 Fluoridation. Sodium fluoride, sodium silicofluoride and fluorosilicic acid shall conform to the applicable NSF/ANSI Standard 60 and AWWA standards. Other fluoride compounds which may be available shall be approved by the department. The following specific requirements shall be met:

(1) FLUORIDE CHEMICAL STORAGE. Fluoride chemicals shall be stored in accordance with the following requirements:

(a) Fluoride chemicals shall be isolated from other chemicals to prevent contamination.

(b) Fluoride chemicals shall be stored in covered or unopened shipping containers and stored inside a building.

(c) Unsealed storage units for fluorosilicic acid shall be vented to the atmosphere at a point outside the building. The vent piping shall terminate with a down-turned U-bend. The vent pipe opening shall be covered with a 24-mesh corrosion resistant screen.

(2) FLUORIDE ACID HOUSING. Equipment for feeding fluoride in the acid form and unsealed acid storage containers shall be housed in accordance with the following requirements:

(a) All chemical feed equipment, solution tanks, and acid containers shall be housed in a separate room within the pumphouse away from controls, electrical contacts and other equipment subject to damage.

(b) Unsealed acid storage units or solution tanks shall be vented to the outside in accordance with sub. (1).

(c) Ventilation shall be provided for the room.

(d) Entrance may be from inside the pumphouse but shall include a gasketed, sealed door to minimize the transfer of fumes outside the fluoride room.

(3) CHEMICAL FEED INSTALLATIONS. Chemical feed installations shall:

(a) Conform to the requirements of ss. NR 811.38 to 811.40.

(b) Provide scales, loss-of-weight recorders, liquid level indicators, or graduated feed drums for determining the amount of chemical applied. The method shall be accurate to within 5% of the average daily change in reading. A meter shall be provided on the water fill line to a fluoride saturator.

(c) Not allow fluoride addition before lime-soda softening or ion exchange softening.

(d) Provide feeders accurate to within 5% of any desired feed rate.

(e) Be such that the point of application of fluorosilicic acid, if into a horizontal pipe, shall be in the lower half of the pipe with the chemical injection nozzle projecting upward into the pipe as required by s. NR 811.39 (7) (f).

(f) Provide chemical feeder settings in accordance with s. NR 811.39 (2) (c).

(g) Provide adequate anti-siphon devices for all fluoride feed pumps or lines as required in s. NR 811.39 (2) (e).

(h) Provide soft water for fluoride saturator makeup water.

(4) SECONDARY CONTROLS. Secondary control systems for automatically controlled fluoride chemical feed devices shall be provided as a means of reducing the possibility for overfeed; these may include flow or pressure switches or other equivalent devices.

(5) DUST CONTROL. Dust control shall meet the following requirements:

(a) Provision shall be made for the transfer of dry fluoride compounds from shipping containers to storage bins or hoppers in such a way as to minimize the quantity of fluoride dust which may enter the room in which the equipment is installed. The enclosure shall be provided with an exhaust fan and dust filter which place the hopper under a negative pressure. Air exhausted from fluoride handling equipment shall discharge through a dust filter to the atmosphere outside of the building.

(b) Provision shall be made for disposing of empty bags, drums, or barrels in a manner which will minimize exposure to fluoride dust. A floor drain shall be provided to facilitate the hosing of floors.

(6) PROTECTIVE EQUIPMENT. Protective clothing, gloves, goggles or face shields and aspirator shall be provided.

(7) TESTING EQUIPMENT. Equipment shall be provided for measuring the quantity of fluoride in the water. Equipment utilizing the SPADNS or electrode method is required. When also feeding phosphates, the electrode method is required. The Alizarin Visual method may be approved only in special cases where the owner can allocate the extra time needed for testing. Fluoride residual testing methodology shall be as specified in s. NR 809.113 (1), Table A.

(8) DILUTION EQUIPMENT. Where dilution of the chemical solution is necessary, a graduated container and transfer pump shall be provided.

NR 811.52 Iron and manganese control. Iron and manganese control refers solely to treatment processes designed specifically for this purpose. The treatment process used will depend upon the character of the raw water. The selection of treatment processes shall meet specific local conditions as determined by engineering investigations, including chemical analyses of representative samples of water to be treated. The department may require the operation of a pilot plant in accordance with s NR 811.44 in order to gather all information pertinent to the design. Consideration shall be given to adjusting the pH of the raw water to optimize the chemical reaction. The following requirements for specified treatment processes shall be met:

(1) REMOVAL BY OXIDATION-DETENTION-FILTRATION OR OXIDATION-FILTRATION. (a) *Oxidation.* Oxidation may be by aeration, as indicated in s. NR 811.45, or by chemical oxidation with chlorine, potassium permanganate, sodium permanganate, hydrous manganese oxides, ozone or chlorine dioxide.

(b) *Detention or reaction.*

1. A detention period of 0.5 to 3 hours, as determined by pilot studies, shall be provided following oxidation by aeration in order to insure that the oxidation reactions are as complete as possible. The detention period may be omitted or reduced where a pilot plant study indicates no need for detention or that a detention period less than 30 minutes will be adequate and department approval is obtained.

2. The detention basin shall be designed as a holding tank with sufficient baffling to prevent short circuits. Sludge collection equipment is not required. The floor shall be sloped to facilitate cleaning. Detention basins shall meet all potable water reservoir standards as required by subch. IX.

(c) *Sedimentation.* Sedimentation basins shall be provided when treating water with high iron or manganese content or both and a significant volume of oxidized material will be created or where chemical coagulation is used to reduce the load on the filters. Provisions for sludge removal shall be made. Sedimentation basins shall meet all potable water reservoir standards as required by subch. IX.

(d) *Rapid rate pressure filters.* Use of rapid rate pressure filters as well as gravity filters may be considered for iron and manganese removal. Use, however, is subject to the following conditions:

1. Minimum criteria relative to number, rate of filtration, structural details and hydraulics, filter media, etc., provided for rapid rate gravity filters in s. NR 811.49 also apply to pressure filters, where appropriate.

2. Generally, the design filtration rate shall be 3 gallons per minute per square foot of filter area. Higher or lower rates may be justified based on in-plant or pilot plant studies.

3. Filter design shall provide for:

a. Loss of head gauges with a suitable range in head on the inlet and outlet pipes of each filter.

b. An easily readable meter or flow indicator on each battery of filters. A flow indicator is recommended for each filtering unit.

c. Piping and shut-off valves so that each filter can be operated and backwashed individually.

d. Minimum side wall shell height of 5 feet. A corresponding reduction in side wall height may be approved where proprietary bottoms permit reduction of the gravel depth.

e. Wastewater collection a minimum of 18 inches above the surface of the media.

f. An underdrain system to efficiently collect the filtered water and distribute the backwash water.

g. Backwash and air relief valve discharge piping terminating with a free air break a minimum of 24 inches above the floor or wastewater collection pipe or sump.

h. Inlet and outlet sampling faucets for each filter.

(2) REMOVAL BY LIME PROCESSES. The removal of iron and manganese by lime processes shall meet the requirements in s. NR 811.57.

(3) REMOVAL BY MANGANESE GREENSAND TYPE FILTRATION. The removal of iron and manganese by greensand type filtration consisting of a continuous feed of potassium or sodium permanganate to the influent of a manganese greensand filter, is more applicable to the removal of iron plus manganese than to the removal of iron only because of economic considerations. As an alternate method, application of the potassium permanganate to the greensand on a "batch" basis may be installed when the department determines "batch" application is as effective as continuous feed. The following requirements apply:

(a) The permanganate shall be applied as far ahead of the filter as practical.

(b) Other oxidizing agents or processes, such as chlorination or aeration, may be used prior to the permanganate feed to reduce the cost of the chemical.

(c) The normal filtration rate shall be 3 gallons per minute per square foot.

(d) The normal backwash rate shall be 8 to 10 gallons per minute per square foot for manganese greensand media and 15 to 20 gallons per minute per square foot for manganese coated media.

(e) Air washing may be provided.

(f) Sampling faucets shall be provided prior to application of permanganate, immediately ahead of filtration and at the filter outlet.

(4) REMOVAL BY ION EXCHANGE. The removal of iron and manganese by ion exchange may not be used unless pilot plant studies have demonstrated that satisfactory removal efficiencies can be continuously provided. There may be no oxidation of the iron or manganese prior to the process.

(5) TESTING EQUIPMENT. Testing equipment shall be provided for all plants. The equipment shall have the capacity to accurately measure the iron content to a minimum of 0.1 mg/l and the manganese content to a minimum of 0.05 mg/l.

NR 811.53 Organics removal.

(1) GENERAL REQUIREMENTS. Organic compounds may be removed by a variety of processes. All process designs shall be based on information from a pilot study conducted in accordance with s. NR 811.44 with the compounds to be removed unless the pilot study is waived by the department. Unless the department approves other requirements, the processes shall be designed to remove a minimum of 99% of the contaminant in question.

(2) PACKED TOWER AERATION. Packed tower aeration units shall meet the following requirements:

(a) *General.* Packed tower aeration, which is also known as air stripping, may be used for the removal of volatile organic chemicals, trihalomethanes, carbon dioxide, and radon.

(b) *Process design.* The process design shall include determination of the Henry's Constant for each contaminant, the mass transfer coefficient, air pressure drop, and stripping factor. Justification shall be provided for the selected design parameters including the height and other dimensions of the unit, air to water ratio, packing specifications, packing depth, and surface loading rate.

1. Pilot testing considerations:

a. The pilot study shall evaluate a variety of loading rates and air to water ratios at the peak contaminant concentration. Special consideration shall be given to removal efficiencies when multiple contaminants occur.

b. If there is adequate past performance data on the contaminant to be treated, including at the peak contaminant concentration, the department may approve the process design based on the appropriate calculations without pilot testing.

2. The installation shall be designed to reduce contaminants to below the maximum contaminant level and to the lowest practical level.

3. The packing material shall be NSF/ANSI Standard 61 approved for use in potable water in accordance with s. NR 810.09 (5). The packing material shall be resistant to the aggressiveness of the water, dissolved gasses, any chemicals added to the water supply, and any cleaning materials.

4. The packing tower shall be constructed of materials compatible with potable water including stainless steel, reinforced concrete, aluminum, reinforced fiberglass, or plastic. The tower construction materials shall be resistant to the aggressiveness of the water, dissolved gasses, any chemicals added to the water supply, and any cleaning materials. Towers constructed of light weight materials shall be provided with adequate support to prevent damage from wind.

5. The ratio of the column diameter to the packing diameter shall be at least 7:1 for the pilot unit and at least 10:1 for the full scale tower. The type and size of the packing used in the full scale unit shall be the same as that used in the pilot unit.

6. The blower shall be adequately sized to provide sufficient air to achieve the desired removal rates. The minimum volumetric air to water ratio at the maximum water flow rate shall be 25:1. The maximum air to water ratio shall not exceed 80:1.

7. The design shall give consideration to potential fouling problems from calcium carbonate, iron and manganese precipitation, and from bacterial growth. Pretreatment shall be provided where necessary to prevent significant fouling. Disinfection capability shall be provided immediately before and after packed tower aeration.

8. The effects of temperature shall be considered in the process design as a drop in water temperature can result in a drop in contaminant removal efficiency.

(c) *Water flow system.*

1. Water shall be distributed uniformly at the top of the tower using spray nozzles or orifice-type distributor trays that prevent short circuiting. For multi-point injection, a minimum of one injection point for every 30 square inches of tower cross-sectional area shall be installed.

2. A mist eliminator shall be provided above the water distributor system.

3. A side wiper redistribution ring shall be provided at least every 10 feet in order to prevent water channeling along the tower wall and short circuiting.

4. Sample faucets shall be provided on the tower inlet and outlet piping.

5. An outlet sump, if provided, shall be accessible for cleaning purposes and be equipped with a drain valve. The drain shall not be directly connected to a storm or sanitary sewer.

6. A drain fitting shall be installed in the outlet piping to allow for the discharge of water and any chemicals used to clean the tower. The drain shall not be directly connected to a storm or sanitary sewer.

7. The design shall prevent freezing of the inlet riser, tower, and the outlet piping when the unit is not operating.

8. All buried piping shall be maintained under a positive pressure greater than the elevation of the ground surface.

9. The water flow to each tower shall be metered.

10. Consideration shall be given to installing a butterfly valve in the inlet piping to control the water flow rate and to minimize air entrainment.

11. A means shall be provided to prevent flooding of the air blower.

12. The inlet piping shall be supported separately from the tower's main structural support.

(d) *Air flow system.*

1. The air inlet shall be installed in a protected location.

2. The air inlet to the blower and the tower discharge vent shall be screened and provided with a downturned, hooded or mushroom cap that protects the screen from the entrance of extraneous matter including insects and birds, obnoxious fumes, all types of precipitation and condensation, and windborne debris or dust. The screens shall be constructed of 24-mesh corrosion resistant material and installed at a location least susceptible to vandalism or damage. The air inlet shall also be provided with a dust filter.

Note: It is recommended that a 4-mesh corrosion resistant screen be installed in front of the 24-mesh screen on the air inlet system.

3. The blower shall be provided with a weather-proof motor, a tight housing, and an adequate foundation.

4. An air flow meter or department approved alternative method for determining the air flow shall be installed on the air inlet piping.

5. A positive air flow sensing device and a pressure gauge shall be installed on the air inlet line to the tower. If positive air flow is not detected, the device shall automatically shut down the water flow.

6. A backup motor for the blower shall be readily available where the tower is used to maintain primary drinking water standards.

(e) *Other requirements.*

1. The tower shall be provided with a sufficient number of access ports with a minimum diameter of 24 inches to facilitate inspection, media replacement, media cleaning, and maintenance of the interior.

2. A means shall be provided for cleaning the packing material should it become fouled.

3. Any clearwell or reservoir constructed to receive water from a tower shall be constructed to meet the potable water reservoir requirements of s. NR 811.64.

4. The tower shall be designed and constructed so that it can be extended without major reconstruction.

5. A means of bypassing the tower shall be provided unless the requirement is waived by the department because the water system has access to other water sources that can provide an average day supply of water at minimum.

6. Disinfection application points shall be provided on the tower inlet and outlet piping.

7. Any water passed through the tower shall be continuously disinfected and provided with a minimum of 30 minutes of post aeration contact time.

8. The water supply pump or pumps, blower motor, disinfection equipment, and the positive air flow sensing device shall be electrically interconnected to operate in series.

9. Adequate packing support shall be provided to allow the free flow of water and to prevent packing deformation.

10. Adequate auxiliary power shall be provided to operate the air blower and disinfection equipment during power failures unless the requirement is waived by the department because the water system has access to other water sources that can provide an average day supply of water at minimum or operation of the tower is not mandatory to meet primary drinking water standards.

11. The tower shall be provided with an adequate foundation and lateral support to prevent overturning due to wind loading.

12. The equipment shall be located within a secure building or within a locked security fence to prevent vandalism.

13. An access ladder with safety cage shall be provided to allow access and inspection of all areas of the tower.

14. Exhaust air shall be discharged directly to the outside atmosphere and in a location that will be protective of public health. Air emissions controls shall be provided if necessary to meet air quality standards.

15. Noise control equipment shall be provided where systems are located in residential areas.

(3) GRANULAR ACTIVATED CARBON FILTERS. Granular activated carbon filter installations shall meet the following requirements:

(a) The maximum filtration rate for pressure filters shall be 6 gallons per minute per square foot of filter area. The maximum filtration rate for gravity filters shall be 3 gallons per minute per square foot of filter area. Higher rates may be justified based on pilot studies for removal of the contaminant in question.

(b) The water from the carbon filter shall be continuously disinfected.

(c) The filter design shall provide for:

1. Loss of head gauges on the inlet and outlet pipes of each filter.

2. A meter or flow indicator.

3. Adequate freeboard for backwashing based on the specific gravity of the media.

4. An underdrain system to effectively collect the filtered water and distribute the backwash water.

5. Backwash and air relief valves having discharges that terminate in a free air break at least 24 inches above the floor.

6. Smooth end sampling faucets on the inlet and outlet pipes of each filter.

7. The ability to conveniently inspect, replace, or regenerate the media.

(d) The carbon used shall be virgin carbon.

(e) Information supporting selection of the carbon for removal of the contaminants in question shall be provided to the department.

(f) A plan for the disposal of the spent carbon shall be included in the specifications. Disposal of spent granular activated carbon shall comply with s. NR 811.859.

(g) An assessment of the impacts of radon and its decay products on operation, operator safety, and waste disposal shall be provided to the department.

NR 811.54 Ozonation. Ozonation can be used for a variety of purposes including disinfection, oxidation, and microflocculation. When applied, all of these reactions may occur but typically only one is the primary purpose for its use. Ozonation can be used for the removal of color, taste and odors, organics, algae, cyanide, hydrogen sulfide, iron, manganese, and heavy metals. In addition to these treatment processes, ozone is an acceptable alternative to chlorine disinfectants. Given the sophisticated nature of the ozone process, consideration shall be given to the need for maintaining qualified operators to operate and maintain the equipment. The following requirements shall be met:

(1) GENERAL. The following general requirements shall be met:

(a) All process designs shall be based on bench or pilot scale studies of dosage requirements, application points, and detention times conducted in accordance with s. NR 811.44.

(b) When ozone is used as a disinfectant, ozonation and detention shall provide the required disinfection CT value. Additionally, application of a disinfectant which maintains a measurable residual in the distribution system shall be required.

(c) Where ozonation is approved by the department to be used for disinfection of a bacteriologically unsafe water supply, duplicate process streams shall be provided. This includes air supply, air preparation equipment, ozone generators, ozone contact chambers, ozone diffusers, power supply, and post disinfection equipment. This requirement may be waived by the department where other acceptable water sources having sufficient capacity are available.

(2) FEED GAS PREPARATION. Feed gas can be air, oxygen enriched air, or high purity oxygen. Sources of high purity oxygen include purchased liquid oxygen; on site generation using cryogenic air separation; or temperature, pressure or vacuum swing, adsorptive separation, technology. For high purity oxygen-feed systems, dryers typically are not required. Feed gas preparation shall meet the following requirements:

(a) *Air handling equipment.* Air handling equipment on conventional low pressure air-feed systems shall consist of an air compressor unless drawn by vacuum, water or air separator, refrigerant and desiccant dryers and particulate filters. For oxygen-feed systems, compressors, separators, and dryers may not be required by the department depending on the purity of the oxygen. In all cases the design shall ensure that the maximum dew point of -60°C (-76°F) will not be exceeded at any time.

(b) *Air compression.* 1. Air compressors shall be of the liquid-ring or rotary lobe, oil-less, positive displacement type for smaller systems or dry rotary screw compressors for larger systems.

2. The air compressors shall have the capacity to simultaneously provide for maximum ozone demand, provide the air flow required for purging the desiccant dryers, where required, and allow for standby capacity.

3. Air feed for the compressor shall be drawn from a point protected from rain, snow, condensation, mist, and fog to minimize moisture content of the air supply. The air feed shall be protected from contaminated air sources. Outside air intakes shall consist of a downturned pipe elbow installed at a location least susceptible to vandalism and covered with a 24-mesh corrosion resistant screen.

4. A compressed air after-cooler or entrainment separator or both with automatic drain shall be provided prior to the dryers to reduce the water vapor.

(c) *Air drying.* 1. Dry, dust-free, and oil-free feed gas shall be provided to the ozone generator. Sufficient drying to a maximum dew point of -60°C (-76°F) shall be provided at the end of the drying cycle.

2. Drying for high pressure systems shall be accomplished using desiccant dryers. For low pressure systems, a refrigeration air dryer in series with desiccant dryers shall be used.

3. A refrigeration dryer capable of reducing the inlet air temperature to 4°C (40°F) shall be provided for low pressure air preparation systems. The dryer may be of the compressed refrigerant type or chilled water type.

4. The desiccant dryers shall be of the external heated or heatless type.

5. For heat-reactivated desiccant dryers, the unit shall contain two desiccant filled towers complete with pressure relief valves, two 4-way valves and a heater. In addition, external type dryers shall have a cooler unit and blowers. The size of the unit shall be such that the specified dew point will be achieved during a minimum absorption cycle time of 16 hours while operating at the maximum expected moisture loading conditions.

6. Each dryer shall be capable of venting dry gas to the atmosphere, prior to the ozone generator, to allow start-up when other dryers are on-line.

(d) *Air filters.* 1. Air filters shall be provided on the suction side of the air compressors, between the air compressors and the dryers and between the dryers and the ozone generators.

2. The filter before the compressor shall be of the coalescing type and be capable of removing all particles larger than 10 microns in diameter. The filter before the dryer shall be of the coalescing type and be capable of removing all particles larger than 5 microns in diameter. The filter after the dryer shall be of the particulate type and be capable of removing all particles larger than 0.5 microns in diameter or a size specified by the generator manufacturer.

(e) *Air preparation piping.* Piping in a compressed air preparation system shall be common grade steel, seamless copper, stainless steel, or galvanized steel. The piping shall be designed to withstand the maximum pressures in the air preparation system. PVC piping may be used in a vacuum air preparation system when located and supported to be protected from physical damage including from heat.

(3) OZONE GENERATORS. Ozone generators shall meet the following requirements:

(a) *Capacity.* The production rating of the ozone generators shall be provided in pounds per day and pounds per kilowatt-hour. The capacity of any ozone generators shall be determined by ozone demand tests including tests under critical conditions. Where ozone is approved for use by the department as a disinfectant, the generators shall be sized in conjunction with the detention basins to provide the required inactivation CT values for viruses, *Giardia lamblia*, and *Cryptosporidium* contained in ss. NR 810.59, NR 810.60, and NR 810.61.

1. The design shall ensure that the minimum concentration of ozone in the generator exit gas will be 1.0% by weight.

2. Generators shall be sized to have sufficient reserve capacity so that the system does not operate at peak capacity for extended periods of time. Low, medium, and high frequency systems which operate at lower peak voltages require less reserve capacity.

3. Generators with individual dielectrics shall have the capability of operating satisfactorily while individual dielectrics are out-of-service. This shall be accomplished through the use of individually fused dielectrics.

4. At least two generators, each with a capacity of supplying the normal ozone demand, shall be provided. If determined by the department to be not critical to maintaining production capacity, smaller installations employing ozone generators with multiple individually fused dielectrics may be able to employ a fewer number of generators each having excess ozone production capacity.

5. If there is to be a variation in the supply temperature of the generator cooling water throughout the year, then curves or other data shall be furnished to the department to show ozone production changes due to the varying temperature of the supplied cooling water. The design shall ensure that the generators can produce the required ozone at the maximum coolant temperature.

(b) *Electrical.* The generators may be low, medium, or high frequency type. The specifications shall require that the transformers and other electrical hardware be proven, high quality components designed for ozone service.

(c) *Cooling.* Adequate cooling shall be provided. Cooling water supplied to the ozone generators may not be corrosive or scale forming and shall be sufficiently free of microbiological and inorganic contaminants to prevent fouling of the water side of the tubes. If natural water quality does not meet this requirement, treatment shall be required. A closed loop cooling water system shall be used if proper cooling water conditions cannot be assured.

(d) *Materials.* To prevent corrosion, the ozone generator shell and tubes shall be constructed of type 304L or 316L stainless steel.

(4) OZONE CONTACTORS. The selection or design of the contactor and method of ozone application depends on the purpose for which the ozone is being used. Contactors can be of the diffused bubble, enture, or aspirating turbine mixer type as approved by the department. Ozone contactors shall meet the following requirements:

(a) Where ozone is used as a disinfectant, a minimum of two contact chambers shall be provided with the chambers designed to prevent short-circuiting. Contactors shall be closed vessels.

(b) Contactors shall be separate vessels having no common walls with the remainder of the facility, unless common walls are approved by the department on a case-by-case basis. If common walls are used, the contactor shall be kept under negative pressure and

sufficient ozone monitors shall be provided to protect worker safety. No normally inhabited structure may be constructed over an ozone contactor or reservoir containing ozone.

(c) Contact vessels shall be made of reinforced poured concrete. All reinforcement bars shall be covered with a minimum of 1.5 inches of concrete. Ozone resistant interior coatings shall be approved by the department in accordance with s. NR 810.09 (5). Smaller contact vessels may be made of stainless steel, fiberglass, or other material which will be stable in the presence of residual ozone and ozone in the gas phase above the water level.

(d) Contact chambers shall be of sufficient depth and size to allow for adequate contact time and freeboard for foaming where applicable. The depth of water in bubble diffuser contactors shall normally be a minimum of 18 feet unless a shallower depth can be justified to the department. A minimum freeboard of 3 feet shall be provided where foaming will be an issue.

(e) The contact time for disinfection shall be determined based on the required inactivation CT values for viruses, *Giardia lamblia,* and *Cryptosporidium* contained in ss. NR 810.59, NR 810.60, and NR 810.61. The minimum contact time shall be 10 minutes. A shorter contact time may be approved by the department if justified by appropriate design and CT considerations. Sufficient ozone capacity and contact chamber size shall be provided to achieve the desired CT value when injecting ozone into only one of the 2 contact chambers. The diffusion system shall normally work on a countercurrent basis such that the ozone shall enter through porous diffusers at the bottom of the vessel and water shall enter from the top of the vessel. Countercurrent flow shall be provided in all chambers of the vessels. Co-current diffusion systems shall only be approved by the department where adequate justification can be supplied.

(f) For ozone applications in which precipitates are formed, such as with iron and manganese removal, porous diffusers may not be used.

(g) Where taste and odor control is of concern, multiple application points and contactors shall be considered.

(h) A system shall be provided between the contactor and the off-gas destruct unit to remove foam from the air and return the froth to the contactor or other location acceptable to the department when foam will be an issue. A potable water spray system shall be placed in the contactor head space if foaming is expected to be excessive.

(i) All openings into the contactor for pipe connections, hatchways, etc., shall be properly sealed to prevent the escape of ozone using welds or ozone resistant gaskets such as Teflon or Hypalon.

(j) A pressure or vacuum relief valve shall be provided in the contactor as appropriate. Pressure or vacuum relief valve discharge piping shall be piped to a location where there will be no damage to the ozone destruction unit or an uncontrolled release of ozone.

(k) Sampling faucets and monitors shall be provided on the inlet and outlet of each contact chamber to monitor water quality and the ozone residual. If allowed by the department, a portable monitor or a comparable testing method may be used to analyze water collected from sample taps provided on the inlet and outlet of each contact chamber.

(L) A water meter shall be provided on the inlet to the contact chambers to measure water flow.

(m) If required by the department, contactors or reservoirs used as contactors shall be fitted with the improvements necessary to allow sampling of water from intermediate points for ozone residual.

(n) All contactors shall have provisions for cleaning, maintenance, and drainage. Each contactor compartment shall also be equipped with an access hatchway.

(5) OZONE DESTRUCTION. Ozone destruction shall meet the following requirements:

(a) A method or combination of methods for destroying or recirculating the final off gas from the ozone contactors shall be provided to meet safety and air quality standards. Acceptable methods include:

1. Thermal destruction.
2. Catalytic destruction.
3. Thermal and catalytic destruction.
4. Recycling to some point in the treatment system in addition to the installation of destruction equipment.

(b) A detectable ozone residual may not carry over into the distribution system.

(c) The maximum allowable air ozone concentration in the destruction unit discharge is 0.1 ppm by volume.

(d) At least two units shall be provided which are each capable of handling the entire gas flow unless the second unit is deemed unnecessary by the department.

(e) Exhaust blowers shall be provided in order to draw ozone off-gas from the contactors into the destruct unit.

(f) Catalysts shall be protected from foam, moisture and other impurities that may harm the catalyst.

(g) The catalyst and heating elements shall be located where they can be easily reached for maintenance.

Note: In order to reduce the risk of fires, the use of units that operate at lower temperatures is encouraged, especially where high purity oxygen is the feed gas.

(6) PIPING MATERIALS. Piping materials used in ozone service shall meet the following requirements:

(a) Only low carbon 304L and 316L stainless steel piping shall be used for ozone service. Alternative piping materials may be approved by the department on a case-by-case basis.

(b) Gasket materials shall be Teflon or Hypalon.

(c) Rubber components may not be used in contact with ozone.

(7) JOINTS AND CONNECTIONS.

(a) Connections on stainless steel piping used for ozone service are to be welded where possible.

(b) Connections with meters, valves, or other equipment are to be made with flanged joints with ozone resistant gaskets, such as Teflon or Hypalon. Screwed fittings and field-cut threaded connections may not be used.

(c) A positive closing plug or butterfly valve and a leak-proof backflow prevention check valve system shall be provided in the piping between the generator and the contactor for pressurized ozone generation systems.

(8) INSTRUMENTATION. Instrumentation shall meet the following requirements:

(a) Pressure gauges shall be provided at the discharge from the air compressor, at the inlet to the refrigerator dryers, at the inlet and outlet of the desiccant dryers, at the inlet to the ozone generators and contactors, and at the inlet to the ozone destruction unit.

(b) Each generator shall have a trip which shuts down the generator when the wattage exceeds a preset level. It is recommended that electric power meters be provided for measuring the electric power supplied to the ozone generators.

(c) Dew point monitors shall be provided for measuring the moisture of the feed gas from each desiccant dryer. Where there is potential for moisture entering the ozone generator from downstream of the unit or where moisture accumulation can occur in the generator during shutdown, post-generator dew point monitors shall be used.

(d) Air flow meters shall be provided for measuring the air flow from the desiccant dryers to each of the ozone generators, the air flow to each contactor, and the purge air flow to the desiccant dryers.

(e) Temperature gauges shall be provided for the inlet and outlet of the ozone cooling water and the inlet and outlet of the ozone generator feed gas, and, if applicable, for the inlet and outlet of the ozone power supply cooling water.

(f) Water flow meters shall be installed to monitor the flow of cooling water to the ozone generators and, if applicable, to the ozone power supply.

(g) At a minimum, ozone monitors shall be installed and maintained to measure ozone concentrations in both the feed-gas and the off-gas from the contactor and the off-gas from the destruct unit. Monitors or a comparable testing method shall also be provided for measuring ozone residuals in water in accordance with subs. (4) and (5) (b). The number and location of ozone residual monitors shall be such that the amount of time that the water is in contact with the ozone residual can be determined.

(h) Ambient air ozone monitors shall be installed in rooms where exposure to ozone is possible.

(9) ALARMS. The installation of alarm and shutdown systems shall meet the following requirements:

(a) A dew point alarm and shutdown shall shut down the generator in the event the system dew point exceeds -60°C (-76°F).

(b) An ozone generator cooling water flow alarm and shutdown shall shut down the generator in the event that cooling water flows decrease to the point that generator damage could occur.

(c) An ozone power supply cooling water flow alarm and shutdown shall shut down the power supply in the event that cooling water flow decreases to the point that power supply damage could occur.

(d) An ozone generator cooling water temperature alarm and shutdown shall shut down the generator if either the inlet or outlet cooling water exceeds the designated preset temperature.

(e) An ozone power supply cooling water temperature alarm and shutdown shall shut down the power supply if either the inlet or outlet cooling water exceeds the designated preset temperature.

(f) An ozone generator inlet feed-gas temperature alarm and shutdown shall shut down the generator if the feed-gas temperature exceeds the designated preset value.

(g) An ambient air ozone concentration alarm and shutdown shall sound when the ozone level in the building ambient air exceeds 0.1 ppm or a lower value chosen by the water supplier. Ozone generator shutdown shall automatically occur when the building ambient air ozone level exceeds 0.3 ppm or a lower value chosen by the water supplier.

(h) An ozone destruct temperature alarm shall sound when the temperature exceeds the designated preset value.

(i) Audible alarms and warning lights shall be installed and maintained to insure operators are alerted to improper operating or hazardous conditions.

(10) SAFETY.

(a) The maximum allowable ozone concentration in the air to which workers may be exposed may not exceed 0.1 ppm by volume.

(b) Noise levels resulting from the operation of the ozonation system shall be controlled to within acceptable limits by special room construction and equipment isolation.

(c) High voltage and high frequency electrical equipment shall meet current electrical and fire codes.

(d) An exhaust fan shall be provided in the ozone generation and contactor rooms to remove ozone gas if a leak occurs and shall meet all of the following requirements:

1. One complete air change per minute shall be provided when the room is occupied.

2. The exhaust fan suction shall be located near the floor with the point of discharge located to avoid contamination of air inlets to other rooms and structures, to outside breathable air, or being blocked by snow or other obstructions.

3. Air inlets shall be located near the ceiling and controlled to prevent adverse temperature variations.

4. An exhaust fan switch shall be located outside of the entrance to the room with a signal light indicating fan operation when the fan can be controlled from more than one point.

(e) A portable purge air blower that will remove residual ozone in the contactor prior to entry for repair or maintenance shall be provided.

(f) A sign shall be posted indicating “No smoking, oxygen in use” at all entrances to the treatment plant. In addition, no flammable or combustible materials shall be stored within the oxygen generator areas.

NR 811.55 Radionuclide removal. (1) RADIUM REMOVAL. Water treatment to remove radium shall meet the following requirements:

(a) *General.* Radium may be removed by using the water treatment processes of zeolite softening, lime-soda softening, reverse osmosis, hydrous manganese oxides, and adsorptive resins. Other processes may also be used to remove radium as approved by the department on a case-by-case basis. Consideration shall be given to the fate of radium in the treatment process including waste disposal. Where applicable, disposal of treatment plant wastes containing radium shall normally be to a sanitary sewer or wastewater treatment plant. Consideration shall be given to protecting workers from gamma radiation exposure and radon gas inhalation where applicable.

(b) *Finished water quality.* Radium removal processes shall be designed to provide a finished water with a radium content as close to 0 picocuries per liter as practical while maintaining a finished water that is not corrosive. The department shall determine

allowable plant outlet water quality, including radium concentrations, based on the raw water quality and the treatment process proposed. If corrosive water is produced during the radium removal process, a department approved method of corrosion control shall be provided.

(c) *Finished water sampling and reporting.* For the radium removal processes listed in par. (a), a minimum of 4 consecutive quarters of finished water sampling for radium shall be required after the plant becomes operational to demonstrate treatment effectiveness. For other proposed radium removal treatment methods, the required radium monitoring program shall be established by the department. The sampling shall be conducted under worst case conditions. Radium analyses shall be performed by a U.S. environmental protection agency approved laboratory. The laboratory shall forward a copy of the radiological analyses to the department in an electronic format. Water hardness monitoring equipment shall be provided to monitor for hardness breakthrough when softening is used for radium removal. Daily water hardness measurements shall be reported on the monthly operating report submitted to the department. Use of hardness monitoring to substitute for radium analyses shall only be allowed if demonstrated effective by simultaneous radium and hardness sampling conducted for one year.

(d) *Water softening.* Treatment for radium removal using standard water softening processes shall comply with the requirements of s. NR 811.57.

(e) *Hydrous manganese oxides.* Water treatment using hydrous manganese oxides for radium removal shall meet the following requirements:

1. Each installation shall be individually pilot tested on-site under a department approval unless the pilot testing requirement is waived by the department based upon documentation of successful similar treatment performance at wells with similar water quality.

2. Pre-mixed or on-site mixed hydrous manganese oxide chemicals shall conform to the applicable NSF/ANSI Standard 60 and AWWA standards as required by s. NR 810.09 (1) (c).

(f) *Adsorptive resins.* Water treatment using adsorptive resins for radium removal that will continuously accumulate radium on the resin shall meet the following requirements.

1. Each installation shall be individually pilot tested on-site under a department approval unless the pilot testing requirement is waived by the department based upon documentation of successful similar treatment performance at wells with similar water quality.

2. The radiation protection section of the department of health services shall be contacted to obtain a radioactive material license to operate pilot and full scale installations prior to constructing or operating the systems.

(g) *Other treatment.* Other radium removal treatment processes may be approved by the department on a case-by-case basis using information obtained from department approved on-site pilot studies conducted on the water to be treated.

(h) *Waste disposal.* Disposal of radium removal treatment plant waste shall comply with subch. XII.

(2) RADON GAS REMOVAL. Water treatment to remove radon gas shall meet the following requirements:

(a) Radon may be removed using aeration or pressurized granular activated carbon filters. Consideration shall be given to the gamma radiation and disposal concerns associated with the use of granular activated carbon filters.

(b) The design of radon removal equipment shall be based on a department approved on-site pilot study conducted on the water to be treated. The department may approve manufactured radon removal equipment without pilot study on a case-by-case basis if adequate treatment effectiveness is demonstrated to the department.

(c) Aerators used for radon removal shall comply with ss. NR 811.45 and 811.53.

(d) Radon gas shall be vented to the atmosphere at an elevation and location to prevent elevated radon gas air concentrations in inhabitable areas.

(e) Granular activated carbon filters for radon removal shall comply with s. NR 811.53. Disposal of carbon filters used for radon removal shall comply with s. NR 811.859.

(f) A minimum of 4 consecutive quarters of finished water sampling for radon gas shall be required after the plant becomes operational to demonstrate treatment effectiveness. The sampling shall be conducted under worst case conditions. Radon gas analyses shall be performed by a U.S. environmental protection agency approved laboratory. The laboratory shall forward a copy of the radiological analyses to the department in an electronic format.

(3) URANIUM REMOVAL. Water treatment to remove uranium shall meet the following requirements:

(a) The designer of any proposed uranium removal equipment shall contact the department prior to the final design of the equipment to allow for department input on design requirements. The design shall be based on information obtained from department approved on-site pilot studies conducted on the water to be treated. Consideration shall be given to the fate of uranium in the treatment process. Disposal of water treatment plant wastes containing uranium shall be in accordance with written department guidance. If applicable, disposal of treatment plant wastes containing uranium shall be to a sanitary sewer or wastewater treatment plant as approved by the department. The discharged water treatment plant wastes and spent media shall be analyzed for radionuclide content as required by the department. The disposal of spent media containing residual radionuclides shall be as approved by the department.

(b) A minimum of 4 consecutive quarters of finished water sampling for uranium shall be required after the plant becomes operational to demonstrate treatment effectiveness. The sampling shall be conducted under worst case conditions. Uranium analyses shall be performed by a U.S. environmental protection agency approved laboratory. The laboratory shall forward a copy of the radiological analyses to the department in an electronic format.

(c) Prior to constructing or operating the systems, the radiation protection section of the department of health services shall be contacted to obtain a radioactive material license to operate pilot and full scale installations when uranium will be concentrated on the resin or media to a level greater than 170 picocuries per gram at any time during use, including just prior to backwashing, regeneration, or disposal.

(d) Disposal of uranium removal treatment plant waste shall comply with subch. XII.

NR 811.56 Sequestration. (1) SEQUESTRATION BY POLYPHOSPHATES. This process is suitable when concentrations of iron, manganese, or a combination of both, are 1.0 mg/1, or less. Polyphosphate treatment may be less effective for sequestering manganese than for iron. The following requirements shall be met:

(a) Where phosphate treatment is used, chlorine residuals shall be maintained in the distribution system. In addition:

(b) Polyphosphates may not be applied ahead of iron and manganese removal treatment. The point of application shall be prior to any aeration or oxidation and as far upstream as practical from the chlorine or other oxidant application.

(c) Chemical feed installations shall conform to the requirements of subch.VI.

(d) Chemicals for new or existing installations shall meet the applicable NSF/ANSI Standard 60 requirements of s. NR 810.09 (1) (c).

(e) Stock phosphate solution shall be kept covered and disinfected by carrying an approximate 10 mg/1 free chlorine residual unless the phosphate is not able to support bacterial growth, has a pH of 2 or less, and has not been diluted.

(f) The total phosphate applied may not exceed 10 mg/l as PO_4.

(g) If polyphosphate sequestration is practiced, appropriate orthophosphate testing equipment shall be provided.

(h) Possible adverse affects on corrosion shall be considered and addressed if necessary when phosphate addition is proposed for iron or manganese sequestering.

(2) SEQUESTRATION BY SODIUM SILICATES. Sodium silicate sequestration of iron and manganese is appropriate only for groundwater supplies prior to air contact. Sodium silicate addition is applicable to waters containing up to 2 mg/l of iron, manganese, or a combination of both. The following requirements shall be met:

(a) On-site pilot tests are required to determine the suitability of sodium silicate for the particular water and the minimum chemical feed rate needed.

(b) Chlorine residuals shall be maintained throughout the distribution system to prevent biological breakdown of the sequestered iron.

(c) Rapid oxidation of the metal ions such as by chlorine or chlorine dioxide shall accompany or closely precede the sodium silicate addition. Injection of sodium silicate more than 15 seconds after oxidation may cause detectable loss of chemical efficiency. Dilution of feed solutions much below 5% silica as SiO_2 shall also be avoided for the same reason.

(d) The amount of silicate added shall be limited to 20 mg/l as SiO_2. The combined amount of added and naturally occurring silicate may not exceed 60 mg/l as SiO_2.

(e) Chemical feed installations shall conform to the requirements of subch. VI.

(f) Sodium silicate may not be applied ahead of iron or manganese removal treatment.

(g) Liquid sodium silicate shall meet the applicable NSF/ANSI Standard 60 requirements of s. NR 810.09 (1) (c).

NR 811.57 Softening. The softening process selected shall be based upon the chemical qualities of the raw water, the desired finished water quality, the requirements for disposal of sludge or brine waste, the cost of plant and chemicals, and plant location. The applicability of the process chosen shall be demonstrated and discussed in detail in the engineer's report. For very hard water, the sodium levels in cation exchange softened

water shall be considered in selecting the treatment process. Following are requirements for specific processes:

(1) LIME-SODA PROCESS. The applicable design standards for lime-soda softening of groundwater are the same as those for conventional clarification-filtration surface water treatment plants, except that the minimum settling time may be reduced to 2 hours. Where softening is included in the surface water treatment process, the clarification criteria shall govern. In addition:

Note: See s. NR 811.47 for criteria pertaining to softening with solids contact units and s. NR 811.49 for filtration requirements.

(a) Mechanical sludge removal equipment shall be provided in the sedimentation basin.

(b) Determinations shall be made for the carbon dioxide content of the raw water.

Note: When concentrations exceed 10 mg/l, the economics of removal by aeration as opposed to removal with lime should be considered. See s. NR 811.45 for aeration requirements.

(c) Equipment for stabilization of water softened by the lime-soda process is required.

Note: See s. NR 811.58 for stabilization requirements.

(d) Provisions shall be included for proper disposal of softening sludges.

Note: See s. NR 811.858 for design requirements.

(e) The use of excess lime may not be substituted for chlorination or any other approved method of disinfection.

Note: See s. NR 811.48.

(2) ION EXCHANGE PROCESS. Iron, manganese or a combination of both in the oxidized state or unoxidized state may cause resin fouling in the ion exchange process. Pretreatment shall be required whenever the content of iron, manganese, or a combination of both is one milligram per liter or more. In specific instances, the department may also require pretreatment where lesser amounts exist. In addition:

(a) The units shall be of pressure or gravity type, of either an upflow or downflow design, using automatic or manual regeneration. Automatic regeneration is suggested for small plants. A manual override shall be provided for all automatic controls.

(b) The design capacity for hardness removal may not exceed 20,000 grains per cubic foot when resin is regenerated with 0.3 pounds of salt per kilograin of hardness removed.

(c) The depth of the exchange material may not be less than 3 feet.

(d) The rate of softening may not exceed 7 gallons per square foot per minute, and the backwash rate shall be 6 to 8 gallons per square foot per minute.

(e) The freeboard design shall be based upon the specific gravity of the media and the direction of water flow.

(f) The bottoms, strainer systems, and support for the exchange materials shall conform to criteria provided for rapid rate gravity filters in s. NR 811.49.

(g) Facilities shall be included for even distribution of the brine over the entire surface of both upflow or downflow units. Backwash, rinse, and air relief discharge pipes shall be installed in such a manner as to prevent back-siphonage.

(h) A bypass shall be provided around softening units to produce a blended water of desirable hardness. Meters shall be installed on the bypass line and on each softener unit. An automatic proportioning or regulating device and shut-off valve shall be provided on

the bypass line. The department may require treatment of the bypassed water to obtain acceptable levels of iron or manganese in the finished water.

(i) Waters having 5 units or more of turbidity may not be applied directly to the cation exchange softener. Silica gel materials may not be used for waters having a pH above 8.4 or when iron is present. When the applied water contains a chlorine residual, the cation exchange material shall be a type that is not damaged by residual chlorine. Phenolic resin may not be used.

(j) Brine storage tanks shall conform to the following requirements:

1. The wet storage tank shall be designed to hold at least 1.5 times the volume of salt delivered to permit refill before the tank is completely empty. The volume of both salt and brine storage to be provided depends upon the size of the plant, the proximity and assuredness of the salt source, and the method of delivery.

2. It shall be isolated from possible sources of contamination.

3. It shall be properly covered and equipped with manholes having overlapping watertight covers to prevent entry of surface runoff.

4. Overflows and vents shall be designed in accordance with ss. NR 811.64 (4) and (8), respectively.

5. The water for filling the tank shall be distributed over the entire surface of the tank by pipes at least 2 pipe diameters above the maximum liquid level in the tank or be protected from back-siphonage.

6. The underdrain collection system shall be covered with a screen or perforated plate to allow brine but not salt to pass through.

7. A sampling tap shall be provided on the brine discharge line in order that the concentration of brine can be determined. A suitable means for measuring the volume of brine used for regeneration shall be provided.

Note: It is recommended that the interior concrete surfaces of brine storage tanks be painted with a salt-resistant sealing compound or paint meeting NSF/ANSI Standard 61 requirements, to prevent deterioration.

(k) The requirements for brine wastes are found in s. NR 811.854.

(L) Smooth-end sampling taps shall be provided for control purposes. Taps shall be located on each raw water source, each treatment unit influent and each treatment unit effluent. Testing equipment shall be provided to adequately control the treatment process at all plants.

(m) Water from ion exchange treatment plants shall be stabilized as required in s. NR 811.58 (4), except where it can be shown that the treated water will be non-corrosive.

NR 811.58 Stabilization. Water that is unstable to the extent of causing corrosion or deposition problems in the distribution system, whether a result of natural causes or water treatment processes, shall be stabilized. The following standards shall apply:

(1) CARBON DIOXIDE ADDITION. (a) Recarbonation chamber design shall provide:

1. A total detention time of 20 minutes or as approved by the department.

2. Two compartments, with a depth that will provide a diffuser submergence not less than 7.5 feet nor greater than recommended by the manufacturer and as follows:

a. A mixing compartment having a detention time of at least 3 minutes.

b. A reaction compartment.

(b) The design shall prevent carbon dioxide from entering the plant from the recarbonation and reaction chamber.

(c) Plants generating carbon dioxide from combustion shall have open top recarbonation tanks in order to dissipate carbon monoxide gas.

(d) Provisions shall be made for draining the recarbonation basin and removing sludge.

(e) Recarbonation tanks shall be located outside or sealed and vented to the outside.

(2) PHOSPHATES. Phosphates may be used for sequestering calcium in lime softened water, corrosion control and in conjunction with alkali feed following ion exchange softening. When used:

(a) Feed equipment shall conform to requirements in ss. NR 811.38 to NR 811.40.

(b) Phosphate chemicals shall meet the NSF/ANSI Standard 60 requirements.

(c) Stock phosphate solution shall be kept covered and disinfected by carrying an approximate 10 mg/1 chlorine residual. The department may exempt phosphate solutions having a pH of 2.0 or less from this requirement.

(d) Facilities shall be designed to maintain satisfactory chlorine residuals as indicated in ss. NR 810.09 (2) and (3).

(e) The total phosphate applied may not exceed 10 mg/1 as PO_4.

(3) SPLIT TREATMENT. If approved by the department, a lime-soda water treatment plant may be designed using 'split treatment' in which raw water is blended with lime-treated water to partially stabilize the water. Treatment plants designed to utilize 'split treatment' shall contain facilities for further stabilization by other methods.

(4) ALKALI FEED. An alkali feeder shall be provided for all ion exchange water softening plants to provide stable water unless the effluent water is shown to be non-corrosive. Other waters may also be corrosive and require pH adjustment. The chemical shall be adequately mixed and the point of application located such that any deposition in the piping is minimized. The piping shall be accessible for cleaning or replacement. Equipment for monitoring pH shall be provided.

(5) CARBON DIOXIDE REDUCTION BY AERATION. The carbon dioxide content of an aggressive water may be reduced by aeration. Aeration devices shall conform to s. NR 811.45.

(6) OTHER TREATMENT. Other treatment for controlling corrosive waters by the use of sodium silicate and sodium bicarbonate may be used where necessary. Any proprietary compound shall receive the specific approval of the department before use. Chemical feeders shall comply with the requirements in subch. VI.

(7) CONTROL. Laboratory equipment shall be provided for determining the effectiveness of stabilization treatment.

NR 811.59 Taste and odor control. Waterworks which are designed and constructed to provide taste and odor control shall comply with any requirements provided for the following applicable methods:

(1) CHLORINATION. Chlorination is effective for the removal of some objectionable odors. Adequate concentration and contact time shall be provided to complete the chemical reactions involved. Excessive potential trihalomethane or other disinfection by-product production through this process is to be avoided by adequate bench-scale testing prior to design.

(2) CHLORINE DIOXIDE. Chlorine dioxide may be used in the treatment of any taste or odor which is treatable by an oxidizing compound. Provision shall be made for proper storage and handling of sodium chlorite to eliminate any danger of explosion.

(3) POWDERED ACTIVATED CARBON. (a) Powdered activated carbon may be added prior to coagulation to provide maximum contact time. Although facilities to allow the addition at several alternate points is recommended, in no case may carbon be added near the point of chlorine application.

(b) The carbon shall be added as a premixed slurry or by means of a dry-feed machine if the carbon is properly 'wetted'.

(c) Continuous agitation or resuspension equipment shall be provided to keep the carbon from depositing in the mixing chamber/slurry storage tank.

(d) Dust control shall be provided.

(e) The required dosage of carbon in a water treatment plant depends upon the tastes and odors involved. Provisions shall be made for adding sufficient amounts to meet peak demands.

(f) Powdered activated carbon shall be handled as a potentially combustible material. It shall be stored in a building or compartment as nearly fireproof as possible. Other chemicals may not be stored in the same compartment. A separate room shall be provided for carbon feed installations. Carbon feeder rooms shall be equipped with explosion-proof electrical outlets, lights, and motors.

(4) GRANULAR ACTIVATED CARBON. The requirements for granulated activated carbon are in s. NR 811.49.

(5) COPPER SULPHATE AND OTHER COPPER COMPOUNDS. Continuous or periodic treatment of water with copper compounds to kill algae or other growths shall be controlled to prevent a level in excess of 1.0 mg/l as copper in the plant effluent or distribution system. Provisions shall be made for uniform distribution of the chemical.

(6) AERATION. The requirements for aeration are in s. NR 811.45.

(7) POTASSIUM PERMANGANATE. The department may approve application of potassium permanganate if the treatment will be controlled to insure that no residual color will be present in the finished water.

(8) OZONE. Ozonation may be used as a means of taste and odor control. Adequate contact time shall be provided to complete the chemical reactions involved. Ozone is generally more desirable for treating water with high threshold odors. Requirements for ozonation are contained in s. NR 811.54.

(9) OTHER METHODS. Any other methods of taste and odor control may be allowed by the department only after laboratory or pilot plant tests or both.

(10) FLEXIBILITY. Plants treating water known to have taste and odor problems shall be provided with equipment and multiple chemical addition points to provide several alternative control processes.

Note: Refer to subch. VI, for requirements for the storage, handling and application of chemicals in treating surface waters.

NR 811.60 Ultraviolet (UV) Light. Ultraviolet (UV) light technology is a primary disinfectant typically used for *Cryptosporidium* and *Giardia lamblia* inactivation of both surface water and groundwater supplies. The USEPA Ultraviolet Light Disinfection Guidance Manual (USEPA UVDGM) shall be used as the basis for the validation, design

and operation of all UV systems. Water systems which are designed to provide ultraviolet light disinfection shall comply with the following:

(1) TREATMENT OBJECTIVES. The target pathogen and the target log inactivation shall be used to identify the corresponding required UV dose.

(2) WATER QUALITY CONSIDERATIONS AND PRETREATMENT. In order to provide adequate disinfection treatment, some water sources may need treatment prior to ultraviolet light disinfection. UV disinfection of surface water sources shall follow filtration. Department approval for specific pretreatment requirements is required if any of the parameters in Table No. 3 are exceeded in the water to be treated by ultraviolet light.

Table No. 3	
Inlet Water Quality Parameters	
Parameter	Maximum or Range
UV 254 mm Absorption	0.155 cm-1
Dissolved Iron	0.3 mg/l
Dissolved Manganese	0.05 mg/l
Hardness	120 mg/l
Hydrogen Sulfide	Non-detectable odor
Fouling Microorganisms	None
pH	6.5 to 9.5
Suspended Solids	10 mg/l
Turbidity	1.0 NTU
Total Coliform	1,000/100 ML

(3) VALIDATION. Ultraviolet light treatment devices shall be validated by a third party entity in accordance with the USEPA Ultraviolet Light Disinfection Guidance Manual (USEPA UVDGM) or another validation standard as approved by the department.

(4) MATERIALS. The ultraviolet light housing shall be type 304 or type 316L stainless steel.

(5) DESIGN. (a) The ultraviolet treatment device shall be designed to provide a UV light dose of a minimum of 40 millijoules per square centimeter (mJ/cm^2) and shall also deliver the target dose as prescribed by s. NR 810.62 by operating within the validated operating conditions for that particular unit.

(b) The ultraviolet treatment assemblies shall be designed to allow visual observation, cleaning, and replacement of the lamp, lamp sleeves, and sensor window or lens.

(c) All ultraviolet lamps shall be housed in quartz sleeves.

(d) Where in-situ cleaning of the lamp sleeves is proposed, the design shall protect the potable water from cleaning solutions.

1. When off-line chemical cleaning systems are used, the UV enclosure shall be removed from service, drained, flushed with an NSF/ANSI Standard 60 certified solution, drained, and rinsed before being placed back in service.

2. On-line systems that use wipers or brushes may use chemical solutions provided they are NSF/ANSI Standard 60 certified.

(e) An automatic shutdown valve shall be installed in the water supply line prior to the ultraviolet treatment device. When power is not provided the valve shall be in the closed position.

(f) The inlet and outlet piping to the reactors shall assure that the UV dose delivery is equal to or greater than the UV dose delivered during validation.

(g) The flow to each reactor shall be equally distributed and metered.

(h) Valves shall be provided to allow isolating and removing from service each UV reactor.

(i) Reactors shall be provided with air relief and pressure control valves per manufacturer requirements.

(j) UV transmittance (UVT) analyzers shall be provided if UVT is part of the dose monitoring strategy.

(k) Sample taps shall be provided downstream of each reactor.

(6) CONTROLS. (a) A delay mechanism shall be installed to provide sufficient lamp warm-up prior to allowing water to flow from the ultraviolet treatment unit.

(b) An automatic shutdown shall be designed to activate the shutdown valve in cases where the ultraviolet light dose falls below the approved design dose or outside of the validated specifications.

(c) Where the UV is necessary to provide adequate disinfection, 99.9 per cent of the volume of water passing through the reactors shall receive UV light treatment within the validated specifications. This may require the use of a bleed line from the reactors during lamp warm up and cool down periods.

(7) BACK-UP. A sufficient number of parallel ultraviolet treatment devices shall be installed to insure that adequate disinfection is provided when one unit is out of service. The department may approve an alternate method that provides adequate disinfection.

(8) TREATMENT BYPASS. No bypass of the ultraviolet treatment process may be installed unless an alternate method of providing adequate disinfection is provided.

(9) MONITORING. Continuous monitoring of UV intensity as measured by a UV sensor, flow rate, and lamp status shall be provided for each ultraviolet treatment device to demonstrate that the device is operating within the range of conditions for which it was validated for the required UV dose. Each monitoring device shall be connected to the control system for the shutdown valve for the respective ultraviolet treatment device. The department may require additional monitoring devices and control systems if any of the water quality characteristics listed in Table No. 3 are representative of the water to be treated and may impair the effectiveness of the ultraviolet light treatment.

(10) CHLORINE ADDITION. Unless waived by the department, chlorine shall be added after UV for virus inactivation and to provide a residual in the distribution system.

(11) PILOT TESTING. Pilot testing is generally not required unless factors such as fouling or aging cannot be predicted by bench-scale testing.

SUBCHAPTER VIII, HYDRO-PNEUMATIC TANKS

NR 811.61 General. The department may approve the use of hydro-pneumatic, or pressure, tanks, as provided in s. NR 811.62 (2). All of the following requirements shall be met:

(1) The tanks shall be completely housed, or earth-mounded with one end projecting into an operating house, to prevent freezing. A tank may be installed below grade if one end is exposed in a basement, vault or manhole. If the tank is installed below grade, all electrical controls and air release valves and any other appurtenances which may permit contamination of the water supply shall be extended to at least 24 inches above grade. Air release piping extended above grade shall be terminated in a down-turned U-bend screened with a 24-mesh corrosion resistant screen. The basement, vault or manhole shall be constructed to prevent surface water from entering including sealing any annular spaces where pipes and appurtenances pass through a wall, floor or ceiling. The basement, vault or manhole shall be equipped with heating, ventilation and dehumidification equipment if necessary to prevent excessive corrosion of the pressure tank and associated piping or to prevent water from freezing. Access manholes shall terminate a minimum of 24 inches above grade with an overlapping, locking cover. Vent pipes shall be metal and terminate a minimum of 24 inches above grade in a downward facing U-bend screened with a 24-mesh corrosion resistant screen. Doors shall open outward and be provided with a lock.

(2) Each tank shall be provided with bypass piping and the necessary shut-off valves to permit operation of the system while the tank is being repaired or painted. For galvanized or bladder type pressure tanks, the individual connecting pipe to each tank shall be provided with a shut-off valve, pipe union and drain fitting. Threaded drain fittings shall be provided with a vacuum breaker.

(3) Each tank not equipped with a bladder or diaphragm to separate the air and water and with a gross volume of 500 gallons or more shall have a drain fitting with shut-off valve and control equipment consisting of a pressure gauge, a pressure relief valve, a water sight glass, an automatic air blow-off, and pressure or probe operated start-stop controls for the pumps.

(4) Each tank not equipped with a bladder or diaphragm to separate the air and water and with a gross volume of 500 gallons or more or that will be painted inside shall be provided with an access manhole. If the tank interior is to be painted it shall be painted with NSF/ANSI approved paints in accordance with s. NR 810.09 (5).

(5) Each tank not equipped with a bladder or diaphragm to separate the air and water and with a gross volume of 500 gallons or more shall be provided with an automatically controlled air compressor to add air to the tank. All compressors used to routinely add air to tanks shall be oil-less. Larger capacity compressors that are not oil-less may be used temporarily to fill a tank upon startup, repair or service but shall be fitted with one or more filters and any other appurtenances necessary to remove particulates and oil from the air prior to injection.

(6) Each tank equipped with a diaphragm or bladder shall be equipped with an air inlet for adding air manually, a pressure relief valve for each tank or bank of tanks sized to handle the maximum flow rate, and pressure-operated start up and shut down controls for the well pump.

(7) The gross volume, in gallons, of any tank or combination of tanks, shall be at least 10 times the capacity of the largest pump, rated in gallons per minute, unless the proposed pump motor or motors will be controlled by a variable output control device in a manner intended to reduce the volume of required pressure tank storage in accordance

with s. NR 811.34 (6). For a standard installation, the required storage volume is intended to provide a minimum pump run time of 2 to 3 minutes.

(8) Each tank shall be identified by stamping or labeling showing the manufacturer's name, a serial number, the tank volume, the allowable working pressure, and the year fabricated.

(9) Each tank not equipped with a bladder or diaphragm to separate the air and water and with a gross volume of 500 gallons or more shall be constructed of steel and have a 0.25 inch minimum side wall and head wall thickness.

SUBCHAPTER IX, STORAGE FACILITIES

NR 811.62 Volume and pressure. (1) VOLUME REQUIREMENTS. A sufficient quantity of water, as determined from engineering studies, shall be maintained in elevated storage when only one pumping unit to the distribution system is available to serve the water system. This shall be at least an average-day supply under normal operating conditions. When more than one distribution pump is available, the storage shall be in accordance with standard engineering practice. Standard engineering practice is based upon an engineering review of existing and future water supply needs including: type of service and population served; average day, maximum day, peak hour and fire flow demands and durations; water source quality, availability and treatment, pump capacities, auxiliary power, storage capacity, water distribution and costs.

(2) PRESSURE REQUIREMENTS. Storage facilities shall be designed to meet all the following requirements:

(a) *Minimum and maximum pressures.* The storage facilities shall be designed to meet the minimum and maximum pressure requirements specified in s. NR 811.66 (1).

(b) *Fire flows and residual pressures.* When fire protection is to be provided, the storage facilities shall be designed in conjunction with distribution system design to provide the minimum fire flows and residual pressures specified in s. NR 811.70 (6).

(c) *Alternative means for maintaining pressure.* A hydro-pneumatic tank, booster pumping facilities, or other reliable means shall be provided to maintain system pressure when a gravity storage reservoir or tank is not available.

(3) ELEVATED STORAGE REQUIREMENT WAIVED. The department may waive the requirement for elevated storage if the system is designed to serve less than 50 homes, if it is not economically feasible to provide elevated storage, if elevated storage facilities are proposed for a later development phase, or if service is proposed for domestic use only.

NR 811.63 Location. Storage facilities shall be located in accordance with all the following requirements:

(1) FLOODWAY AND FLOODPLAIN.

(a) *Floodway.* Storage facilities may not be located within a floodway.

(b) *Floodplain..* If it is necessary to locate a reservoir in a floodplain outside of the floodway, the lowest elevation of the bottom floor, including sumps, shall be a minimum of 2 feet above the regional flood elevation as defined in ch. NR 116. All projects shall conform to the requirements of that chapter.

(2) GRADING. The area surrounding structures shall be graded in a manner that will prevent surface water from standing within 50 feet of the structure.

(3) YEAR-ROUND ACCESS. Storage facilities shall be located in an area accessible during the entire year. If necessary, road improvements shall be installed to provide year-round dry land access. Storage facilities and access roads shall be located on property owned by the water supply owner or for which the owner has obtained easements.

(4) FLOOR ELEVATIONS. The department recommends that the lowest elevations of floors and sump floors of ground level reservoirs and standpipes should be placed at or above the normal ground surface. If the department allows the floor or sump to be below the normal ground surface, it shall be placed a minimum of 2 feet above the groundwater table. Borings shall be made to determine groundwater elevations if that information is not available.

(5) CONTAMINATION SOURCES.

(a) Sewers, drains, fuel storage tanks, standing water, and similar sources of contamination shall be kept a minimum of 50 feet from the reservoir.

(b) The department may approve gravity or force main sewers within 50 feet of a reservoir if the sewer or force main is constructed of water main class pipe meeting the requirements of s. NR 811.69 and is pressure tested in place to meet the requirements of s. NR 811.12 (5) (d) 2.

(6) ROOF SURFACE ABOVE GRADE.

(a) The top roof surface of a ground level reservoir may not be less than 2 feet above normal ground surface.

(b) The department shall require a higher exposed elevation if high groundwater, poor surface drainage, or tight soils are encountered that will deter subsurface drainage or if necessary to provide positive pressures for pump intake or discharge lines in accordance with s. NR 811.37.

Note: It is recommended that no more than one-half of the reservoir depth be constructed below grade.

(c) The department may except clearwells constructed under filters from the 2 foot requirement when the total design gives the same protection.

NR 811.64 Construction details. (1) MATERIALS. Materials used in the construction of storage facilities shall meet all the following requirements:

(a) *General requirements.* The materials and designs used for finished water storage structures shall provide stability and durability as well as protect the quality of the stored water. Unless the design engineer can justify the use of other materials, the department will approve only steel or concrete for use in a water storage facility. Porous materials, including wood and concrete block, may not be used.

(b) AWWA *standards*. Structures shall be constructed in accordance with the current AWWA standards concerning steel or concrete tanks, standpipes, reservoirs, and elevated tanks wherever they are applicable.

(2) PROTECTION. Storage facilities shall be constructed and maintained to protect the water supply in accordance with the following requirements:

(a) *General requirements.* All water storage structures shall have watertight roofs or covers which exclude surface water, rain, snow, birds, animals, insects and dust.

(b) *Installation of ancillary equipment.* The installation of ancillary equipment, such as antennas, shall be done in a manner that ensures no damage to the tank, coatings, or water quality. Any damage that occurs to the tank during installation shall be corrected.

(c) *Adjacent compartments.* Finished water may not be stored or conveyed in a compartment adjacent to nonpotable water when the two compartments are only separated by a single wall. The department may waive this requirement for backwash water holding compartments meeting potable water reservoir construction on a case-by-case basis.

(d) *Security.* Locks on access manholes, fences and ladder cage bottoms and any other necessary measures shall be provided to prevent trespassing, vandalism and sabotage.

Note: The department recommends that intrusion alarms and/or motion sensors be installed as applicable and where feasible for elevated tank pedestal access doors and reservoir access hatches. The department recommends that high strength, cut resistant locks or lock covers be installed to prevent direct cutting of a lock.

(3) DRAINS. Drains for storage structures shall meet all the following requirements:

(a) *General drain discharge requirements.*

1. Piping used to drain water from a water storage structure shall discharge to the ground surface. The drain piping shall be brought down to within 12 to 24 inches of the ground surface and discharged with a free air break over a drainage inlet structure, splash pad or riprap.

2. Drains may not be directly connected to a storm sewer. The department may approve discharge with a free air break over a storm sewer manhole or through a valved connection to the overflow piping on a case-by-case basis.

3. Drains may not be directly connected to a sanitary sewer. Clear water from drains may not be discharged to a sanitary sewer. The department may approve the temporary discharge of drain wastewater containing sediment and/or chemicals used for cleaning or temporary treatment of a water storage structure to a sanitary sewer on a case-by-case basis.

(b) *Impacts to the environment prohibited.* Negative impacts to the environment from the discharge of drainage water shall be prevented.

(4) OVERFLOW. Each reservoir shall be provided with overflow piping meeting all the following requirements:

(a) *General overflow discharge requirements.*

1. 'Discharge.' The overflow pipe of a water storage structure shall be brought down to within 12 to 24 inches of the ground surface and shall discharge with a downward opening and a free air break over a drainage inlet structure, splash pad or riprap. The department may approve discharge with a 12 to 24 inch free air break over a storm sewer manhole on a case-by case basis. Overflows may not discharge to a sanitary sewer.

2. 'Pipe diameter.' The overflow pipe shall be of sufficient diameter to permit wasting water in excess of the maximum filling rate.

3. 'Pipe material.' The over flow pipe shall be constructed of ductile iron, steel or stainless steel.

4. 'Visibility.' All overflow pipes shall be located so that any discharge is visible.

5. 'Flapper or rubber duck bill valve.' If a metal flapper valve or a rubber duck bill valve is used, a screen shall be provided in accordance with par. (c) and (d).

(b) *Impacts to the environment prohibited.* Negative impacts to the environment from the discharge of overflow water shall be prohibited.

(c) *Elevated tanks and standpipes.*

1. When an internal overflow pipe is used on elevated tanks, it shall be located in the access tube.

2. The overflow pipe shall be provided with a 4-mesh corrosion resistant screen installed within the pipe at a location least susceptible to damage by vandalism.

(d) *Ground level structures.*

1. Overflow pipes shall terminate a minimum of 12 to 24 inches above the final graded ground surface in a manner to prevent the backflow of water into the reservoir.

2. The overflow shall be screened with 24-mesh corrosion resistant screen installed within the pipe at a location least susceptible to damage by vandalism.

3. Each reservoir chamber that can be isolated from the rest of the reservoir so that it can remain in service while other chambers are out of service shall be provided with its own overflow pipe terminating outside the reservoir in accordance with the requirements of subds. 1. and 2.

(5) INLET-OUTLET PIPING. Inlet and outlet piping to a storage structure shall meet all the following requirements:

(a) *Pressure requirements.* Inlet and outlet piping from a storage structure shall be under positive pressure at all times wherever practical and in conformance with s. NR 811.37 (1). The department may approve inlet piping that is not under positive pressure at all times on a case-by-case basis where the piping is exposed and located above grade.

(b) *Pipe sizing.* Piping shall be sized to accommodate design fill and removal rates including considerations for future improvements.

(6) BYPASS PIPING.

(a) *Groundwater facilities.* If the water system design is such that all water passes through one ground reservoir, there shall be bypass piping from the well pumps to the high lift pumps to allow the reservoir to be taken out of service for cleaning and maintenance. The department may waive this requirement if the well pumps can provide sufficient volume and pressure directly to the distribution system, if the well pumps and high lift pumps are greatly different in capacity, or if the reservoir is divided into multiple cells which can be independently removed from service. If CT is required, the department will approve bypass piping around reservoirs only if the required minimum CT can be met with the reservoir chamber or chambers out of service.

(b) *Surface water facilities.* If the water treatment plant design is such that all water passes through one ground reservoir, bypass piping, or multiple cells shall be installed to allow the reservoir to be totally or partially taken out of service for cleaning and maintenance. The design shall provide for maintaining the required minimum CT while the reservoir is totally or partially out of service.

(7) ACCESS. Water storage structures shall be designed with reasonably convenient access for cleaning and maintenance. Manholes installed above the waterline shall meet the following requirements:

(a) *Elevated storage structures and reservoirs covered by inhabitable structures.* Manholes on elevated tanks, standpipes and reservoirs covered by inhabitable structures shall be framed a minimum of 4 inches above the surface of the roof. Manhole openings shall be fitted with a solid watertight cover which overlaps the framed opening and extends down around the frame a minimum of 2 inches. A compressible gasket shall be attached to the bottom side of the cover so that when the cover is closed it will provide a water tight seal around the manhole opening.

(b) *Ground storage structures.* On ground level structures, manholes shall be elevated no less than 24 inches above the top or covering sod. Manhole openings shall be fitted with a solid watertight cover which overlaps the framed opening and extends down around the frame a minimum of 2 inches. A compressible gasket shall be attached to the bottom side of the cover so that when the cover is closed it will provide a water tight seal around the manhole opening.

(c) *Locks.* Overlapping interior and exterior manhole covers shall be locked at all times except when being used by authorized personnel.

(d) *Other openings.* All other manholes, openings, or access ways shall be provided with watertight, bolted, and gasketed covers.

(8) VENTS. Water storage structures shall be vented to the atmosphere. Vent installations shall meet the following requirements:

(a) *General requirements.*

1. The overflow pipe shall not be considered a vent.
2. Open construction between the sidewalls and the roof to act as a vent is not allowed.

(b) *Exclude contamination.* Vents shall be constructed to:

1. Prevent the entrance of surface water, rain and snow as applicable.
2. Exclude birds and animals.
3. Exclude insects and dust to the extent this can be done while providing effective venting.

(c) *Elevated tanks and standpipes.* Vents installed on elevated tanks and standpipes shall terminate in a U-bend or mushroom cap constructed with the opening at least 4 inches above the roof and covered with 4- to 24-mesh corrosion resistant screen installed within the pipe or cap at a location protected from the environment. Mushroom caps shall be provided with an automatically resetting pressure-vacuum relief "frost-proof" mechanism. The skirted sides of mushroom caps shall totally cover any screens when viewing the cap from the side.

(d) *Ground level structures.* Vents installed on ground level structures shall terminate in a U-bend or mushroom cap constructed with the opening 24 to 36 inches above the roof or sod and covered with 24-mesh corrosion resistant screen installed within the pipe or cap at a location least susceptible to vandalism. The skirted sides of mushroom caps shall totally cover any screens when viewing the cap from the side.

(e) *Size.* Vents shall be sized to allow an air flow consistent with maximum water inflow and outflow rates.

(f) *Materials of construction.*

1. Vent pipes shall be constructed of ductile iron, steel, or stainless steel pipe.
2. Mushroom caps shall be constructed of steel, stainless steel, or aluminum.
3. Screens shall be constructed of stainless steel or aluminum.

(9) SILT STOP. The discharge pipes from all water storage structures shall be located in a manner that will prevent the flow of sediment into the distribution system. Removable silt stops shall be required where feasible.

(10) ROOF AND SIDEWALLS. The roof and sidewalls of all storage structures shall be constructed to meet the following requirements:

(a) *Watertight construction.* The roof and sidewalls of all structures shall be watertight with no openings except properly constructed vents, manholes, overflows, risers, drains, pump mountings, control ports, or piping for inflow and outflow.

(b) *Sealed openings.* Any pipes running through the roof, floor or sidewall of a finished water storage structure shall be sealed watertight. Openings for metal tanks shall be welded or properly gasketed. Pipes running through openings in a concrete structure shall be connected to a standard wall pipe or run through a wall sleeve which were poured in place during the formation of the structure. These wall pipes and wall sleeves shall be metal and have seepage rings embedded in the concrete. Pipes running through a wall sleeve shall be provided with a department approved watertight seal installed between the pipe and the wall sleeve.

(c) *Roof curbing.* Openings in a storage structure roof or top, designed to accommodate control apparatus, pump columns and other equipment, shall be provided with minimum 4-inch high curbing and sleeved with proper additional flashing to prevent the access of surface or floor drainage water to the structure.

(d) *Installation of appurtenances.* Valves and controls shall be located outside the storage structure so that valve stems and similar projections do not pass through the roof or top of the reservoir unless the department determines that this requirement need not be met to fulfill the other requirements of this chapter. The department may allow floor drain piping carrying graywater or a trench drain carrying graywater, electrical conduits, water service piping, and chemical feed piping to be encased in a concrete reservoir roof. Other appurtenances, including drain piping carrying blackwater, shall not be encased in a concrete reservoir roof. Toilets shall not be located above the reservoir roof.

(e) *Earth cover over reservoirs.*

1. In addition to meeting the requirements of s. NR 811.63 (6), the top of any earth covered reservoir shall be covered with a flexible waterproof membrane. The minimum membrane thickness shall be 0.060 inches. Department approval of the specific membrane proposed is required. Protective boards shall be placed over the membrane before applying the earth cover when recommended by the membrane manufacturer.

2. Bentonite panel membranes may not be used to meet the waterproof membrane requirement.

3. Earth covering of reservoirs shall be avoided where possible.

(f) *Roof slope.* The top of any storage structure shall have a minimum slope of 0.015 feet per foot to facilitate drainage.

(g) *Drainage for roof or cover.* The roof or cover of the storage structure shall be well drained, but downspout pipes may not enter or pass through the reservoir. Where parapets or similar construction which would hold water and snow on the roof are constructed, adequate waterproofing and drainage shall be provided.

(h) *Exposed grouted precast concrete planked roofs.* Grouted precast concrete planked roofs exposed to the environment shall meet the following requirements:

1. A minimum 2 inch thick reinforced concrete topping shall be installed over the top surface of the grouted plank roof. Fiber mesh may be used to provide reinforcing.

2. A minimum 0.060 inch thick flexible waterproofing membrane shall be installed over the concrete topping. Department approval of the specific membrane proposed is required. The installation of stone ballast over the membrane is optional.

3. The roof planks, concrete topping, or any insulation boards installed over the topping shall be installed to provide the minimum slope of 0.015 feet per foot required in par. (f).

(i) *Exposed reinforced poured-in-place flat concrete roofs.* Reinforced poured-in-place flat concrete roofs exposed to the environment shall be provided with a minimum 0.060 inch thick flexible waterproofing membrane installed over the roof. Department approval of the specific membrane proposed is required. The installation of stone ballast over the membrane is optional.

(11) SAFETY. Worker safety shall be considered in the design of the storage structure. The following shall apply:

(a) Ladders, ladder cages or safety climbing devices, balcony railings, landing platforms, guardrails, and safe locations of entrance hatches shall be provided where applicable.

(b) On elevated tanks where persons transfer from the access tube to the water compartment railings, handholds and landing platforms shall be provided, where applicable.

(c) On elevated tanks with riser pipes over 8 inches in diameter, protective bars shall be installed over the riser openings inside the tank.

(d) A handrail system shall be installed on the roof of any elevated tank.

(e) Storage structures shall be constructed to meet applicable local, state, including applicable portions of ch. Comm 32, and federal OSHA codes for specific safety requirements.

(f) Confined space entry should be in accordance with the requirements of s. Comm 32.29 and federal OSHA codes.

(12) FREEZING. All of the following actions shall be taken to minimize the potential for freezing:

(a) All water storage structures and their appurtenances, especially riser pipes, overflows, and vents shall be designed to minimize freezing that would interfere with proper operation.

(b) Riser pipes shall be insulated where possible.

(c) Recirculation pumps and air bubbler systems may be used to minimize freezing.

(d) Equipment used for freeze protection that will come into contact with the potable water shall meet ANSI/NSF Standard 61 or be approved by the department.

(13) TURNOVER. Storage facilities shall be designed to facilitate turnover of water in order to prevent freezing and stagnant water conditions. Consideration shall be given to installing separate inlet and outlet pipes, diffusers, baffle walls, adjusting controls to temporarily reduce storage capacities, or other department approved means where necessary.

(14) INTERNAL CATWALK. Every catwalk over a storage structure containing finished water or water to become finished water shall have a solid floor with sealed raised edges to prevent shoe scrapings, dirt, and other contaminants from falling into the water.

(15) PAINTING AND CATHODIC PROTECTION. Interior paints, coatings, and cathodic protection systems shall be installed in accordance with all of the following requirements:

(a) Metal surfaces shall be protected by paints or other protective coatings. The paints or coatings may be accompanied by cathodic protection devices.

(b) Interior paint and coating systems and application procedures shall be consistent with current AWWA standard D102, have ANSI/NSF Standard 61 approval for use in potable water, and be approved by the department in accordance with s. NR 810.09 (5). Paint and coating systems shall be applied, cured, and used in a manner consistent with the ANSI/NSF approval. After curing, the paint or coating shall not transfer any substance to the water that will be toxic or cause taste or odor problems.

(c) Cathodic protection shall be designed and installed by competent technical personnel.

Note: A copy of the cited AWWA standards is available from the American Water Works Association, 6666 West Quincy Ave., Denver, Colorado 80235.

(16) MISCELLANEOUS APPURTENANCES. The following miscellaneous appurtenances shall be installed where feasible or applicable and in accordance with the following requirements:

(a) *Smooth end sampling faucet.* A smooth end sampling faucet shall be installed in the connecting main or riser pipes of elevated tanks, standpipes, and reservoirs, if design permits. The sampling faucet shall be installed in accordance with the requirements of s. NR 811.37 (5) (b) 3.

(b) *Chlorination tap.* A threaded tap for chlorination purposes shall be installed in the connecting main or riser pipes of elevated tanks, standpipes, and reservoirs.

(c) *Valve vaults and above grade enclosures.* Valve vaults and above grade enclosures installed at the base of storage facilities shall be protected against freezing and provided with floor drainage facilities discharging to the ground surface by gravity, if possible, or else by a floor sump with a sump pump permanently installed. If constructed outside of the storage facility, the entrance to the vault or enclosure shall be locked to prevent unauthorized access.

(17) DISINFECTION. Water storage structures shall be disinfected in accordance with all the following requirements:

(a) *Disinfection required.* Water storage structures shall be disinfected before being put into service or before being returned to service following maintenance or repair work to the water storage structure. Detailed procedures for disinfection, equivalent to those outlined in the current AWWA standard C652 for disinfection of water storage facilities, shall be written into the specifications by the design engineer or contractor as applicable.

(b) *Bacteriological sampling.* Disinfection and bacteriological sampling requirements shall meet the requirements of s. NR 810.09 (4). Detailed procedures for bacteriological sampling shall be written into the specifications by the design engineer or contractor as applicable.

(c) *Allowable chlorine in wasted water.* Consideration shall be given to the amount of chlorine in any water wasted from a storage structure to the environment to prevent harmful impacts. Dechlorination prior to discharge may be necessary in some cases to prevent harmful impacts. Water wasted to surface water may not contain any substances in concentrations that adversely affect the water as determined under chs. NR 105 and 106. For chlorine, no total residual chlorine may be measured in water being discharged to a surface water.

Note: A copy of the AWWA standards is available for inspection at the central office of the department of natural resources and may be obtained for personal use from the

American Water Works Association, 6666 West Quincy Avenue, Denver, Colorado 80235.

NR 811.65 Plant storage. The applicable design standards of ss. NR 811.63 and 811.64 shall be followed for plant storage. In addition:

(1) FILTER WASHWATER TANKS. Filter washwater tanks shall be sized, in conjunction with available pump units and finished water storage, to provide the backwash water required by s. NR 811.49. Consideration shall be given to the possibility of having to backwash more than one filter at a time, or several filters in succession.

(2) CLEARWELL.

(a) Clearwell storage shall be sized, in conjunction with distribution system storage, to relieve the filters from the strain of fluctuations in water use or peak demands.

(b) When water storage is used to provide proper contact time for disinfection, documentation, including tracer testing, shall be provided to assure adequate detention time under all operating conditions. The department may require the installation of baffle walls or additional reservoir capacity if necessary to prevent short circuiting and to obtain adequate contact times.

(3) BASINS AND WET-WELLS. Receiving basins, pump cans, and pump wet-wells for finished water or water to become finished water shall be designed as finished water storage structures.

NR 811.66 Distribution system storage. The applicable design standards of ss. NR 811.63 and 811.64 shall be followed for distribution storage. In addition:

(1) PRESSURE VARIATION. Distribution system storage facilities shall meet all the following requirements:

(a) *Allowable head range.* The maximum variation between high and low levels in storage structures which float on a distribution system may not exceed 30 feet during normal usage.

(b) *Minimum and maximum pressures.* The minimum and maximum pressure in service areas shall be 35 and 100 psi respectively at ground level.

1. In areas where a minimum of 35 psi cannot be maintained, a high pressure zone shall be established in the distribution system by means of booster pumps and related facilities or pressure boosting systems on individual service lines as required in subch. XI. The use of individual service line booster pumps shall be limited to the extent possible.

2. When static pressures exceed 100 psi, pressure reducing devices may be required on mains in the distribution system.

Note: Section Comm 82.40 (7) (d) 2. a. requires a pressure reducing device to be installed to protect individual services when the incoming pressure exceeds 80 psig.

(2) DRAINAGE. The design shall allow draining of storage facilities for cleaning or maintenance while maintaining adequate positive pressure in the distribution system. The drains shall discharge to the ground surface as required in s. NR 811.64 (3).

(3) LEVEL CONTROLS. Adequate controls shall be provided to maintain required levels in distribution system storage structures. Level indicating devices shall be provided at a central location. Combination indicating and recording devices are recommended.

SUBCHAPTER X, DISTRIBUTION SYSTEMS

NR 811.67 Applicability. This subchapter covers water distribution systems for community water systems which are to be located in street rights-of-way or easements. Other piping systems shall be constructed in accordance with the requirements of ch. Comm. 82.

NR 811.68 Ownership of municipal water distribution systems.

(1) MUNICIPAL OWNERSHIP. The distribution system of a municipal water system shall be owned and maintained by the waterworks owner.

(2) MUNICIPALLY OWNED MAINS ON PRIVATE PROPERTY. All water mains owned by a municipal water system on private property shall be installed in permanent easements.

Note: To assure the use of approved materials and proper installation and maintenance, the department recommends that fire hydrants and water mains to be constructed on private property be installed in permanent easements and owned and maintained by the waterworks owner.

(3) PRIVATELY OWNED LOOPED MAINS REQUIRING CHECK VALVES. Water mains to be connected to the publicly owned distribution system at more than one point may be privately owned and maintained provided that a check valve is installed on the water main at each point of connection to the distribution system to prevent water from flowing back into the distribution system. Each check valve shall be located in a manhole or vault and shall be immediately preceded and followed by a buried or exposed shut-off valve on the main. The water supplier shall have access to the manholes and valves for inspection purposes.

Note: A drain fitting may be added on the piping between the check valve and the gate valve on the public water system side of the check valve. The gate valve may be closed and the drain fitting opened to periodically check for leakage through the check valve. Refer to s. Comm. 82.40 for standards for the construction of private water mains.

NR 811.69 Materials. Water main materials shall meet the following requirements:

(1) ACCEPTABLE MATERIALS. All pipe used for water main installations shall be cast iron, ductile iron, steel, reinforced concrete, polyvinyl chloride, high density polyethylene, copper or materials specially approved by the department for restricted or experimental use. If a restricted or experimental use approval is issued, the department may require special precautions until a satisfactory use record has been established. For polyvinyl chloride pipe, only joints with elastomeric gaskets or butt fusion welds shall be used.

(2) STANDARDS. Pipes, joints, fittings, valves, and fire hydrants shall have been manufactured in conformity with the latest standards issued by the AWWA and may not be used unless approved by the department. All pipe shall be minimum AWWA pressure class 150 and shall be designed for a minimum 100 psi working pressure except as approved by the department for special low pressure applications. Specifications for water main pipe and joints for water mains having a diameter less than those contained in AWWA standards shall meet the requirements of s. Comm. 82.40.

Note: A copy of the AWWA standards is available for inspection at the central office of the department of natural resources and may be obtained for personal use from the American Water Works Association, 6666 West Quincy Avenue, Denver, Colorado 80235.

(3) LEAD FREE. Any pipe, pipe fittings, solder, or flux used in the installation or repair of any public water system shall be lead free. Lead free is defined, with respect to solders and flux, as containing not more than 0.2% lead and, with respect to pipes and pipe fittings, as containing not more than 8.0% lead. Repairs to lead joints shall be made using alternative methods, if possible. For ductile iron pipe, the use of lead tipped gaskets is prohibited.

(4) PROTECTION AGAINST CORROSION. Special attention shall be given to selecting pipe materials which will protect against internal and external corrosion. If soils, groundwater, or both, are aggressive, ductile iron water mains shall be provided with polyethylene encasement installed in conformity with the latest AWWA standards.

(5) PROTECTION AGAINST CONTAMINATION FROM ORGANIC COMPOUNDS IN SOIL AND GROUNDWATER. If possible, construction of water mains through or near areas of soil or groundwater contamination shall be avoided. Special attention shall be given to selecting pipe and gasket materials for construction in contaminated soil or groundwater which will protect against external corrosion and penetration of the pipe and gaskets by the contaminants. Water mains designed to pass through or near areas of contaminated soil or groundwater shall meet the following requirements:

(a) The department shall be contacted to obtain approval of the water main design requirements prior to the submittal to the department of the plans and specifications.

(b) Installations shall meet the following design criteria:

1. Minimum class 52 ductile iron water main piping with polyethylene encasement shall be used.

2. Hydrant drain ports shall be permanently plugged or hydrant barrels installed without drain ports.

3. Nitrile gaskets shall normally be used, except as provided in subd. 4.

4. The use of fluorocarbon gaskets shall be required if:

a. Nitrile gaskets will not be compatible with the contaminants present.

b. The soil or groundwater contamination exceeds primary drinking water standards.

c. The contamination concentrations and locations are uncertain.

5. Pipe bedding shall meet the requirements of s. NR 811.73 (2) (a).

(6) REHABILITATION. All materials used for the interior rehabilitation of water mains shall meet ANSI/NSF standards and may not be used until specifically approved by the department.

NR 811.70 Water main design. The design of water mains and distribution systems shall meet the following requirements:

(1) GENERAL. Water mains and water distribution systems shall be designed to maintain point-of-entry water quality. Special consideration shall be given to distribution main sizing, providing multidirectional flow where possible, providing an adequate number of shut-off valves for distribution system control, providing an adequate number of fire hydrants where fire protection will be provided, and providing for adequate flushing throughout the system. Systems shall be designed to maximize turnover, to minimize the number of dead ends and to minimize residence times while delivering code complying pressures and flows.

(2) FLOODING. Any areas of the project which are located within the floodway or floodplain as defined in ch. NR 116 shall be identified on the plans and shall conform to the requirements of that chapter.

(3) WETLANDS. Any areas of the project which are to be located within a wetland, pass through a wetland or may impact a wetland shall be identified. Copies of the Wisconsin wetland inventory maps are available for inspection at the office of the department of natural resources and may be purchased through the department's internet web site.

(4) PRESSURE. All water mains, including those not designed to provide fire protection, shall be sized after a hydraulic analysis based on flow demands and pressure requirements. The minimum and maximum normal static pressure in the distribution system shall be 35 psi and 100 psi, respectively, at ground level. The system shall be designed and operated to maintain a minimum residual pressure of 20 psi at ground level at all points in the distribution system under all conditions of flow.

(5) DIAMETER. The minimum diameter of water mains to provide water for fire protection and to serve fire hydrants is 6 inches. Larger mains are required if necessary to allow the required fire flow while maintaining a minimum residual pressure of 20 psi at ground level at all points in the distribution system.

(6) FIRE PROTECTION. The minimum flow requirement for water mains serving fire hydrants is 500 gpm at 20 psi residual pressure at ground level at all points in the distribution system.

Note: It is recommended that the actual fire flow design be based on the capacity of any fire pumper which may be connected to the water main and the type of services or buildings to be protected. It is also recommended that the local fire department be consulted to discuss needed fire flows before constructing water system improvements.

(7) SMALL DIAMETER MAINS. Any departure from minimum requirements shall be justified by hydraulic analysis and future water use, and will be considered for approval by the department only in special circumstances. The main sizing for small diameter mains may be calculated based upon a fixture unit determination.

Note: See the requirements of ch. Comm. 82 for guidance in sizing mains according to fixture units to be served.

(8) DEAD ENDS. Dead ends shall be minimized by looping mains whenever possible. Where dead end mains occur, they shall terminate with a fire hydrant, if flow and pressure are sufficient, or with an approved flushing hydrant or blow-off for flushing purposes. Flushing devices shall be installed on the dead end of all water main stubs 20 feet or more in length unless a shut-off valve is installed near the point of connection and closed until the stub is placed in service in the future. Flushing devices shall be sized to provide a minimum velocity of 2.5 feet per second in the water main being flushed. Flushing devices on dead end mains shall be installed downstream of all services. No flushing device shall be directly connected to any sewer.

Note: Refer to AWWA standard C651 for required flows and openings to flush pipelines.

(9) VALVING. Sufficient valves shall be provided on water mains so that inconvenience or sanitary hazard to water users will be minimized during maintenance and construction. Valves shall be located at not more than 500-foot intervals in commercial districts and at not more than one block or 800-foot intervals in other districts.

(10) FRICTION COEFFICIENTS. Unless other values are specially approved by the department, the following "C" values, using the Hazen-Williams formula, shall be used

for checking the hydraulic characteristics of new water mains shown on plans and specifications submitted for review:

Non-cement lined iron	C = 100
Cement lined iron	C = 120
PVC	C = 140
HDPE	C = 150

The "C" value of existing water mains is likely to be substantially less than the "C" value for new pipe and shall be considered in distribution system analysis. The actual interior diameter of the pipe being modeled shall also be considered in the distribution system analysis.

NR 811.71 Hydrants. (1) LOCATION. Fire hydrants shall be provided at each street intersection and at intermediate points between intersections. Generally, fire hydrant spacing may range from 350 to 600 feet depending on the type of area being served and the individual fire hose length and fire fighting practices utilized by each system.

(2) SIZE. Fire hydrants shall have a bottom valve size of at least 5 inches, one 4.5-inch pumper nozzle, and two 2.5-inch nozzles unless the waterworks has established other hydrant criteria which are in accordance with AWWA standards and are approved by the department. The connecting main between the supply main and the hydrants shall be a minimum of 6 inches in diameter.

(3) RESTRICTIONS. Fire hydrants may not be installed on proposed water mains which will not have minimum flow and pressure as required in s. NR 811.70 (6). The department may approve the installation of hydrants if system improvements which will make at least 500 gpm available at 20 psi are planned for construction within one year following construction of the proposed improvements. If the department approves the installation of hydrants which do not meet the minimum flow and pressure requirements of s. NR 811.70 (6), the hydrants shall be color coded or tagged and the fire chief shall be notified in writing that fire department pumpers may not be connected to the hydrants until the necessary additional improvements are made and fire flow tests have shown that greater than the minimum required flow and pressure are available.

(4) DRAINS. Hydrant drains may not be connected to, or located within 8 feet of sanitary sewers, storm sewers, or storm sewer inlets. If groundwater rises above the drain port, hydrant drain ports shall be permanently plugged prior to installation or hydrants with no drain ports installed and hydrant barrels shall be pumped dry during freezing weather. If hydrant drain ports are not plugged, a gravel pocket or dry well shall be provided unless the department finds that the natural earth will provide adequate drainage.

(5) AUXILIARY VALVES ON HYDRANT LEADS. Auxiliary valves shall be installed in hydrant leads off transmission water mains, off water mains in commercial and industrial districts and off all water mains 12 inches and larger.

Note: The department recommends that auxiliary valves be installed in all hydrant leads. Also, hydrants of the type that remain closed when the barrels are broken off are recommended.

(6) SERVICE LATERALS ON HYDRANT LEADS PROHIBITED. Service laterals may not be installed on hydrant leads.

(7) FLUSHING HYDRANTS. Flushing hydrants or blow-off installations shall be installed at all dead ends and at intermediate locations as necessary in order to remove sediment and optimize water quality for all water systems that do not provide fire protection. Flushing hydrants shall be sized to provide a minimum velocity of 2.5 feet per second in the water main being flushed. Flushing hydrants shall allow frost-proof operation. If necessary, flushing hydrants shall be pumped out prior to freezing weather.

(8) SAMPLING HYDRANTS AND FAUCETS. All water systems shall be provided with a sufficient number of dedicated sampling faucets, hydrants, or stations to provide representative water quality sampling sites throughout the water distribution system including extremities and dead ends. An adequate number of sampling sites shall be provided as required under the department's monitoring plan requirements contained in ch. NR809 to meet all of the department's water quality sampling requirements. Sampling faucets, hydrants, and stations shall be protected from contamination and vandalism to the extent possible. Locks shall be provided for sampling station enclosures. Fire hydrants may not be considered as sampling hydrants. All sampling locations shall be pumped out prior to freezing weather if necessary. Sampling installations may not have drain-to-soil weep ports and shall not drain to any sanitary or storm sewer.

NR 811.72 Air-relief facilities and valve and meter chambers. (1) AIR-RELIEF FACILITIES. If possible, water mains shall be constructed to avoid high points at which air can accumulate. Permanent provisions shall be installed to remove the air by means of air relief valves, hydrants, or blow-offs when high points cannot be avoided. Automatic air-relief valves may not be used in situations where flooding of the manhole or chamber may occur. The open end of an air-relief pipe shall be extended to the top of a manhole or chamber and have a screened, downward facing elbow.

(2) CHAMBERS. Chambers, pits, and manholes containing valves, blow-offs, meters, or other such appurtenances constructed for use in the distribution system shall meet the following requirements:

(a) *Location not subject to flooding or high groundwater.* If possible, chambers, pits, and manholes containing valves, blow-offs, meters, or other such appurtenances to a distribution system shall not be located in areas subject to flooding or in areas of high groundwater. If location in areas not subject to flooding or in areas of high groundwater is not possible, any valve discharge or structure vent pipes shall terminate a minimum of 24 inches above the ground surface or the high water level, whichever is the higher elevation.

(b) *Means to allow drainage.* Chambers, pits, and manholes containing valves, blow-offs, meters, or other such appurtenances to a distribution system may not be connected directly to any storm drain or sanitary sewer, nor may any blow-offs or air-relief valves be connected directly to any sewer. Chambers shall be drained to absorption pits underground or to the ground surface where they are not subject to flooding by surface water or high groundwater. If electrical power is available, sumps with sump pumps discharging above grade with a down-turned metal pipe and a free air break over grade or over a storm sewer receptacle may also be approved by the department.

(c) *Installation requirements.* If not installed in the road right-of-way or if installed in the road right-of-way in areas with minimal risk from damage due to traffic and maintenance equipment, larger below grade facilities or below grade facilities housing

pumps and other electrical equipment shall meet the applicable booster pumping station requirements of s. NR 811.84. In addition, if installed in vulnerable areas of the road right-of-way, the facilities may be constructed with a gasketed, watertight, bolt-down cover at grade if approved by the department. All structures shall be vented to the atmosphere.

NR 811.73 Installation of mains. (1) GENERAL REQUIREMENTS. Installation of mains shall be in accordance with AWWA standards, manufacturer's recommended installation procedures, and the requirements of this section.

Note: A copy of the AWWA standards is available for inspection at the central office of the department of natural resources and may be obtained for personal use from the American Water Works Association, 6666 West Quincy Avenue, Denver, Colorado 80235.

(2) INSTALLATION SPECIFICATIONS. The specifications for installation of mains shall include provisions for all of the following:

(a) *Bedding.* Continuous and uniform bedding shall be provided in the trench for all buried pipe. Backfill material shall be tamped in layers around the pipe and to a sufficient height above the pipe to adequately support and protect the pipe. Grossly contaminated soil shall be removed, properly disposed of according to chs. NR 500 to NR 520 requirements, and replaced with clean material. Clean clay cut-off walls shall be installed to minimize the movement of contaminants along the trench if required by the department.

(b) *Stone removal.* Stones found in the trench shall be removed for a depth of at least 6 inches below the bottom of the pipe.

(c) *Testing.* Pressure testing of the installed pipe, including measurement of leakage and testing for electrical conductivity shall be conducted, if appropriate. Pressure and leakage testing shall be in accordance with the latest edition of AWWA Standard C600.

(d) *Disinfection and sampling.* All new, cleaned or repaired water mains shall be disinfected and sampled in accordance with the following requirements:

1. 'Disinfection required.' Water mains shall be disinfected before being put into service or before being returned to service following maintenance or repair work. Detailed procedures for disinfection, equivalent to those outlined in the current AWWA Standard C651, for disinfecting water mains, shall be written into the specifications by the design engineer.

2. 'Bacteriological sampling.' Disinfection and bacteriological sampling requirements shall meet the requirements of s. NR 810.09 (4). The design engineer shall include detailed procedures for bacteriological sampling in the specifications.

3. 'Allowable chlorine in wasted water.' Consideration shall be given to the amount of chlorine in any water wasted from a water main to the environment to prevent harmful impacts. Dechlorination prior to discharge may be necessary in some cases to prevent harmful impacts. Water wasted to surface water may not contain any substances in concentrations that adversely affect the water as determined under chs. NR 105 and NR 106. For chlorine, no total residual chlorine may be measured in water being discharged to surface water.

Note: A copy of the AWWA standards is available for inspection at the central office of the department of natural resources and may be obtained for personal use from the

American Water Works Association, 6666 West Quincy Avenue, Denver, Colorado 80235.

(e) *Cover.* Sufficient earth or other suitable cover shall be provided over mains to prevent freezing. A minimum cover of 5 to 7 feet is required unless determined by the department to be unnecessary in specific cases. Insulation may be required at some installations to prevent freezing.

(f) *Thrust restraint.* All tees, bends, plugs and hydrants shall be provided with thrust blocking, tie rods, or a joint restraint system designed to prevent movement.

(g) *Locating wire.* All underground components of public water mains, including mains, hydrant leads, and water services to be constructed of nonconductive material, shall be provided with a locating wire or other department approved equally effective means that can be used to locate the components.

(h) *Erosion control.* Construction site erosion control shall be provided in accordance with s. NR 811.09 (2).

(3) PIPE BURSTING. Department approval is required prior to installing any replacement water mains using the pipe bursting method. Replacement water mains installed through the pipe bursting method shall meet the following requirements in addition to the applicable requirements of sub (2).

(a) The interior of the water mains shall be thoroughly cleaned of any debris and thoroughly disinfected prior to installation. Water samples shall be collected from the newly installed replacement water mains and sampled for bacteriological quality in accordance with s. NR 810.09 (4).

(b) The installed water mains shall be tested to meet at minimum the applicable AWWA pressure and leakage test requirements prior to being placed in service.

(c) Unless department approval is obtained for the use of other pipe materials, only butt fused DR 9 or 11 HDPE pipe or butt fused DR 14 or 18 PVC pipe shall be used for installation as part of the pipe bursting process.

NR 811.74 Separation of water mains and sanitary or storm sewer mains.

(1) GENERAL. The following factors shall be considered in planning separation of water and sewer mains: materials and type of joints for water and sewer pipes, soil conditions, service and branch connections into the water main and sewer line, compensating variations in the horizontal and vertical separations, space for repair, and alterations of water and sewer pipes.

(2) HORIZONTAL SEPARATION. The following horizontal separation requirements shall be met:

(a) Water mains shall be laid at least 8 feet horizontally from any existing or proposed sanitary sewer main, storm sewer main, or sanitary or storm sewer manhole. The distance shall be measured center to center.

(b) In cases where it is not practical to maintain an 8-foot horizontal separation distance, the department may allow exceptions to that requirement on a case-by-case basis, if supported by data from the design engineer. The following requirements shall be met in order for the department to approve a center to center horizontal separation distance of less than 5 feet:

1. The bottom of the water main shall be at least 18 inches above the top of the sewer main and the minimum horizontal separation distance shall be 3 feet measured edge to edge.

2. A profile of the rock surface as determined from exploration shall be shown on the plan when high bedrock is the reason for the exception to the 8-foot separation distance.

Note: See Figure No. 10 in the Appendix.

(3) VERTICAL SEPARATION. If water mains cross over sanitary or storm sewer mains, the water main shall be laid at such an elevation that the bottom of the water main is at least 6 inches above the top of the sewer main. If water mains cross under sanitary or storm sewer mains, a minimum vertical separation distance of 18 inches shall be maintained between the top of the water main and the bottom of the sewer main. At crossings, one full length of water pipe shall be centered above or below the sewer so that both joints will be as far from the sewer as possible. Special structural support for the water and sewer pipes may be required by the department after a determination that added support is necessary to meet the requirements of this chapter.

(4) EXCEPTION. If it is not possible to obtain the proper horizontal and vertical separation as specified in subs. (2) and (3), a gravity sanitary or storm sewer main shall be constructed of materials and with joints that are equivalent to water main standards of construction from manhole to manhole and air pressure tested to assure water tightness in accordance with the 4 psi pressure testing requirements given in s. NR 811.12 (5) (d) 2. Department approval is required for any exception to the requirements in subs. (2) and (3).

(5) FORCE MAINS. No exception to the 8-foot separation distance may be granted for sanitary sewer force main installations unless the requirement in sub. (2) (b) is met.

(6) SEWER MANHOLES. No water pipe may pass through or come into contact with any part of a sanitary or storm sewer manhole.

NR 811.75 Separation of water mains and other contamination sources. (1) Proposed water mains shall be adequately separated from any potential source of contamination. The following minimum horizontal separation distances shall be maintained:

(a) Eight feet between a water main and a POWTS holding, treatment or dispersal component, sanitary sewer lift-station or grave site.

(b) Twenty five feet between a water main and a buried main or tank containing gasoline, diesel, bio-diesel, ethanol, other alternative fuel, fuel oil, petroleum product, motor fuel, burner fuel, lubricant, waste oil, or hazardous substance.

(c) Fifty feet between a water main and a sanitary landfill.

(2) Water mains may not pass through landfills.

NR 811.76 Surface water crossings. Surface water crossings, whether over or under water, present special problems. For this reason, the department shall be consulted before final plans are prepared. The design shall meet the following requirements:

(1) ABOVE-WATER CROSSINGS.

(a) The pipe shall be adequately supported and anchored, protected from damage and freezing, and accessible for repair or replacement.

(b) A means to accommodate bridge expansion such as an expansion joint shall be provided to the water main if the corresponding bridge has expansion joints.

(c) Shut-off valves shall be provided at both ends of a bridge crossing if the bridge has expansion joints so that the section can be isolated for testing or repair. The valves shall be easily accessible and not subject to flooding.

(2) UNDERWATER CROSSINGS.

(a) A minimum cover of 2 feet shall be provided over the pipe.

(b) When crossing water courses which are greater than 15 feet in width, the following shall be provided:

1. The pipe shall be of special construction, having flexible, watertight joints. Butt fused DR 9 or 11 HDPE pipe or butt fused DR 14 or 18 PVC pipe are an acceptable alternative.

2. Shut-off valves shall be provided at both ends of water crossings so that the section can be isolated for testing or repair. The valves shall be easily accessible, and not subject to flooding, and the valve closest to the supply source shall be in a manhole. Unless the department approves an equivalent method, permanent taps shall be made on the pipe within the manhole on either side of the valve to allow insertion of a small water meter to determine leakage during system pressure testing.

NR 811.77 Common casing crossings. In some cases, such as highway crossings, it becomes desirable due to extremely high construction costs to install water mains, sanitary sewers, force mains or storm sewers within a common casing. The following requirements apply:

(1) Any sewers shall be constructed of water main class pipe and joints and pressure and leakage tested in accordance with the requirements in s. NR 811.12 (5) (d) 2.

(2) The water main shall be located above the sewer main and be adequately supported.

(3) A vertical separation distance of 6 inches shall be maintained between the bottom of the water main and the top of the sewer main.

(4) Normal separation distances shall be provided as close as possible to the ends of the casing.

(5) Force mains shall be installed within an intermediate casing within the larger casing. The intermediate casing shall extend a minimum of five feet beyond each end of the larger casing.

(6) The remaining space in the casing may be filled if desired.

NR 811.78 Water loading stations. Water loading stations shall comply with the requirements of this section to prevent contamination of both the public water supply and potable water vessels being filled.

(1) There may be no backflow or backsiphonage to the public water supply. Either a free air break shall be provided as shown in Figure No. 11 in the Appendix or alternatively, a reduced pressure principle backflow preventer shall be installed on the water loading piping. Cross connection control shall be provided to meet the requirements of s. Comm. 82.41.

(2) The piping arrangement shall prevent contaminants from being transferred from a hauling vessel to others subsequently using the station.

(3) Hoses may not be contaminated by contact with the ground.

Note: It is recommended that a water meter be installed on the piping at all water loading stations to record water usage. It is also recommended that a free air break be installed in place of installing a reduced pressure principle backflow preventer.

SUBCHAPTER XI, WATER PRESSURE BOOSTER STATIONS

NR 811.79 General. If the storage or primary pumping facilities cannot provide a minimum static pressure of 35 psi throughout the distribution system at street elevation, it shall be necessary to create a boosted pressure zone to serve those portions of the system. The use of pressure boosting systems on individual service lines shall be limited to a maximum of 10 individual systems in any given service area. The minimum static water pressure at street elevation shall be 20 psi in order for individual pressure boosting systems to be installed. Individual pressure boosting systems shall be owned and maintained by the water system owner. Booster station design shall be in accordance with this subchapter.

NR 811.80 Location. (1) Pumps shall take suction from a reservoir, a water main adjacent to a reservoir, or elevated tank, where possible. If necessary, pumps can take suction from a distribution system water main if the installation complies with the requirements of this subchapter.

(2) For pumps not directly supplied by a reservoir or elevated tank, the suction pressure shall be at least 35 psi when the pumps are supplying design flow rates.

(3) Underground installations shall be permitted only if gravity drainage to the ground surface of large volumes of water from the vault can be provided or if the pumps and drivers are protected from damage by water or can be readily replaced. The department may waive the gravity drainage requirement if a minimum of 20 psi can be maintained at street elevation in the boosted zone by the main zone when the station is out of service or if sufficient elevated storage or alternate supply exists within the booster zone. The drain line may not discharge to a storm or sanitary sewer.

(4) In-line submersible pumps may be installed below the ground surface in a watertight installation. Provision shall be made for operational monitoring, pressure monitoring, flow metering, water sampling, and isolation valves. The pumps shall be accessible for servicing and repairs.

(5) Electrical equipment shall be installed above ground except if determined unnecessary by the department to meet the other requirements in this chapter.

(6) Buried stations may not be installed beneath roadways or in a floodplain.

Note: Refer to ch. NR 116 for floodplain definitions.

NR 811.81 Pumps and pressures. (1) The booster pumps shall maintain static pressures in the area served within the range of 35 to 100 psi under normal operating conditions.

(2) The pump capacities for domestic service only shall be as established in Figure No. 1 in the Appendix, or as justified by additional engineering studies. Fire protection shall be provided if feasible and will require additional engineering studies.

(3) Pumping stations which serve more than 50 living units shall be designed such that the peak demand can be met with the largest pump out of service.

(4) For pumps not directly supplied by an adjacent reservoir or elevated tank, the suction pressure shall be at least 35 psi when the pumps are supplying design flow rates. An automatic cutoff control shall be provided that will stop the pumps when the suction pressure falls below 20 psi.

(5) For pumps supplied by an adjacent but not physically connected reservoir or elevated tank, the suction pressure shall be at least 3 psi under all pumping conditions. An automatic cutoff control shall be provided that will stop the pumps when the suction pressure falls below 3 psi.

(6) For those stations servicing a boosted zone without elevated storage, one of the following shall be provided:

(a) A continuously running pump to maintain pressure in the boosted zone. A small feed back line or other means shall be provided to prevent the pump from overheating.

(b) A single speed pump and one or more hydro-pneumatic tanks with a total gross volume at least ten times the rated gallon per minute capacity of the pump.

(c) A pump fitted with a 2 to 3 minute minimum run timer and one or more hydro-pneumatic tanks to prevent frequent pump cycling.

(d) A pump controlled by a variable output control device along with one or more hydro-pneumatic tanks having a total gross volume meeting the requirements of s. NR 811.34 (6).

NR 811.82 Storage requirements. Elevated storage is not required for a boosted pressure zone where the primary pressure zone can provide minimum pressures of 35 psi at street elevation in all areas of the boosted zone. Elevated storage facilities shall be provided for a boosted pressure zone serving more than 50 living units in any of the following situations:

(1) If the primary pressure zone cannot maintain pressures of 3 psi or greater at street elevation in all areas served by the booster pumps including situations where emergency power is provided.

(2) If the primary pressure zone provides pressures of 3 to 35 psi at street elevation in all areas served by the booster pumps and an emergency power source is not provided for the booster station.

NR 811.83 Emergency power requirements. Boosted pressure zone emergency power installations shall meet the following requirements:

(1) Emergency power shall be provided if 50 or fewer living units are being served and the primary pressure zone cannot maintain positive pressures of 3 psi or greater at street elevation in all areas served by the booster pumps, and sufficient elevated storage is not provided.

(2) Emergency power shall be provided if more than 50 living units are being served and the primary pressure zone cannot maintain pressures of 20 psi or greater at street elevation in all areas served by the booster pumps, and sufficient elevated storage is not provided.

(3) Emergency power shall consist of a dedicated on-site engine-generator set with an automatic transfer switch capable of powering at minimum the domestic service pumps and station building demands.

NR 811.84 Station requirements. (1) The on-off operation of the pumps and the system pressure at the booster station shall be monitored at one of the main waterworks

pumping stations, other waterworks facility, or wherever the master control panel is located. At stations serving 50 or fewer living units, monitoring may be provided by a light or an audible alarm placed in a conspicuous location outside the station to indicate pump failure. A continuous recording pressure device may be provided.

(2) Pressure gauges shall be provided on the booster pump suction and discharge lines.

(3) A flow meter shall be provided, if practical, in the booster pump discharge line. Booster pump motors shall be provided with hour meters if a flow meter will not be installed.

(4) A metal smooth end sampling faucet shall be installed on the combined booster pump discharge piping.

(5) The design shall provide for automatically bypassing the pumping units when the pumps are not operating.

(6) The design shall include piping and shut-off valves for manually bypassing the station when the station is out of service.

(7) If chemical addition is necessary, the station shall be provided with a separate chemical room meeting the requirements of subchs. VI and VII.

(8) General requirements for above grade stations are listed in subch. IV.

(9) Underground stations shall be equipped with heating, ventilation, and dehumidification equipment. Sump and sump pump equipment shall be provided unless a discharge to the ground surface can be provided. Access manways shall terminate a minimum of 24 inches above grade with an overlapping, locking cover. Sump pump discharge and vent pipes shall be metal and terminate a minimum of 24 inches above grade in a downward facing U-bend with a 24-mesh corrosion resistant screen. Chemical addition equipment may not be installed in underground stations.

SUBCHAPTER XII, WASTE DISPOSAL

NR 811.85 General. The discharge of pollutants from a waterworks facility into the waters of the state or into a publicly owned treatment works, as those terms are defined in s. 283.01, Stats., shall conform to all the applicable requirements of ch. 283, Stats., and the rules adopted under ch. 283, Stats. Provisions shall be made for proper disposal of all wastes from waterworks facilities. Wastes may be from sanitary facilities, laboratories, or treatment plants. If new methods are proposed or the treatment results are uncertain, the department may require laboratory, pilot, or full-scale testing to establish design parameters. Sections NR 811.853 to 811.862 contain general standards to be utilized in meeting the requirements of ch. 283, Stats. System owners proposing discharges other than to already permitted wastewater treatment plants shall obtain a WPDES permit.

NR 811.851 Sanitary wastes. Wastes from toilet facilities shall be discharged to a sanitary sewer system. The floor elevation to a building from which there is a discharge shall be constructed at least one foot above the rim of the nearest sanitary sewer manhole in accordance with s. NR 811.25 (1) (h) to prevent contamination from sewer backup. Where a sanitary sewer system is not available, the installation of an individual POWTS may be approved by the department if the installation meets department of commerce ch. Comm 83 requirements and if sufficient protection of the water source can be assured.

NR 811.852 Floor drainage. Floor drains in pump stations and treatment plants shall comply with the requirements of s. NR 811.25 (1) (h).

NR 811.853 Backwash wastewater from iron and manganese filters. (1) DISCHARGE TO SANITARY SEWER. Backwash wastewater from iron and manganese removal filters may be discharged to a sanitary sewer if the discharge will not overload the facilities or adversely affect the wastewater treatment process. The radionuclide content of the wastewater shall comply with s. NR 811.856. An equalization tank shall be provided when it is necessary to prevent overloading the sewers or wastewater treatment plant.

(2) DISCHARGE TO SAND FILTERS. All of the following requirements apply when sand filters are used to treat backwash wastewater from iron and manganese removal filters:

(a) Filters shall be designed for a maximum rate of 35 gallons per square foot per day except if testing indicates that higher rates will not cause excessive plugging of the media and a quality effluent can be maintained. Sufficient surface area shall be provided so that during any filtration cycle the wastewater depth over the media does not exceed 2 feet. The filters shall be sized to handle the entire backwash volume from all of the filters at the treatment plant unless the filters are washed on a rotating schedule.

(b) No filter, regardless of the volume of water to be handled, may be smaller than 100 square feet in area. Multiple units may be necessary to facilitate cleaning.

(c) The filter media shall consist of a minimum of 12 inches of sand, 3 to 4 inches of supporting small gravel or torpedo sand, and 9 inches of gravel in graded layers. All fines shall be removed from the media by washing. The filter sand shall have an effective size of 0.3 to 0.5 mm and a uniformity coefficient not exceeding 3.5.

(d) An adequate underdrainage collection system shall be provided. Provision shall be made for sampling the filter effluent.

(e) A cover shall be provided which prevents freezing during the winter months.

(f) The filter shall be located in an area not subject to flooding, and the site shall be graded to prevent ponding of surface runoff. Finished grade elevation shall be designed to facilitate maintenance, cleaning, and removal or replacement of surface sand. An overflow may not be provided.

(g) The radionuclide content of the wastewater shall comply with s. NR 811.856.

(3) DISCHARGE TO LAGOONS. Lagoons used to settle backwash wastewater from iron and manganese removal filters shall meet all of the following design requirements:

(a) Lagoons shall be designed with a volume which is 10 times the total quantity of wastewater discharged during any 24-hour period.

(b) Lagoon length shall be 4 times the width, and the width shall be at least 3 times the depth.

(c) Adequate inlet and outlet devices shall be provided so that velocity currents are minimized.

(d) The radionuclide content of the wastewater shall comply with s. NR 811.856.

(4) DISCHARGE TO DETENTION TANKS. Detention tanks used to settle backwash wastewater from iron and manganese removal filters shall meet all of the following design requirements:

(a) Detention tanks shall be designed to maximize settling by means of inlet piping and baffling configurations. Tanks shall be of sufficient capacity to hold at least 2

complete backwash cycles. The floor shall be sloped to a sump and access manholes provided to facilitate cleaning. A cover shall be provided to prevent freezing.

(b) Pumps shall be provided to discharge the decant water to a storm sewer or receiving watercourse over approximately a 24-hour period. A convenient means of sampling the effluent shall be provided. Any discharge requires a WPDES permit. The radionuclide content of the wastewater shall comply with s. NR 811.856.

(c) Decant water to be returned to the water treatment plant shall meet the requirements of s. NR 811.862.

(d) Settled sludge removed from detention tanks shall be disposed of at a wastewater treatment plant unless the department approves an alternate disposal location on a case-by-case basis.

NR 811.854 Brine wastes from ion exchange plants. The department may allow brine wastes may to be discharged to a sanitary sewer system or to a watercourse if sufficient flow is available to provide adequate dilution to meet water quality or effluent standards. Dilution in streams shall be based on the 7-day low flow for the previous 10-year period. Except if discharging to large waterways or sewerage systems that will not be overloaded by the discharge, the minimum requirement shall be an equalization tank of sufficient size to allow brine discharge over a 24-hour period. The radionuclide content of the wastewater shall comply with s. NR 811.856.

NR 811.855 Wastewater from reverse osmosis plants. The department may allow reject wastewater from reverse osmosis membranes to be discharged to a sanitary sewer system or to a watercourse if sufficient flow is available to provide adequate dilution to meet water quality or effluent standards. Dilution in streams shall be based on the 7-day low flow for the previous 10-year period. Except if discharging to large waterways or sewerage systems that will not be overloaded by the discharge, the minimum requirement shall be an equalization tank of sufficient size to allow reject wastewater discharge over a 24-hour period. The radionuclide content of the wastewater shall comply with s. NR 811.856.

NR 811.856 Water treatment plant wastewater radionuclide content compliance with the Unity Equation. Levels of radium and uranium in water treatment plant wastewater to be discharged to a sanitary sewer or to surface water shall meet all of the following requirements:

(1) UNITY EQUATION. The levels of radium and uranium in the wastewater shall meet the limits of the Unity Equation as calculated based upon the requirements of the department of health services under s. HFS 157.30 (3) and Appendix E of ch. HFS 157.

(2) CALCULATIONS. (a) Unity Equation calculations shall be performed for water treatment plants treating wells with combined radium-226 and radium-228, uranium, or both exceeding the maximum contaminant level unless required by the department in individual cases or if other less common radionuclide elements may be of concern.

(b) The water system owner or their consultant shall submit the Unity Equation assumptions and calculations to the department for review and approval before, or along with, the submission of plans and specifications to the department for the radionuclide removal water treatment equipment or plant.

(3) CORRECTIVE ACTIONS. Corrective action as approved by the department shall be taken, if necessary, to maintain the result of the Unity Equation calculations as less than one.

Note: The department may be contacted to obtain a copy of DNR Application of DHS Radionuclide Wastewater Disposal Criteria for help in addressing Unity Equation issues.

NR 811.857 Backwash wastewater from lime softening water treatment plants. Filter backwash wastewater from lime softening water treatment plants shall be disposed of by any of the following methods:

(1) Returned to the inlet end of the plant in accordance with the requirements of s. NR 811.862.

(2) Direct or controlled discharge to a sanitary sewer system may be allowed by the department if the discharge will not overload the facilities or adversely affect the wastewater treatment process.

(3) Discharge to surface water. Suspended solids shall be removed from the filter backwash wastewater before the filter backwash wastewater is discharged to surface water. This will require settling and possibly coagulation. Any discharge requires a WPDES Permit.

NR 811.858 Lime softening sludge. Sludge from plants using lime to soften water will vary in quantity and in chemical characteristics depending on the softening process and the chemical characteristics of the water being softened. The department shall determine special disposal requirements for sludge from plants treating water containing radium-226, radium-228, or uranium. These special requirements shall modify the requirements for specific disposal methods. The requirements for specific disposal methods are as follows:

(1) LAGOONS. The design shall meet the following minimum requirements:

(a) Locations free from flooding, with grading or ditching to divert surface runoff.

(b) Minimum lagoon depth of 4 to 5 feet with interior and exterior slopes of 3:1.

(c) Two years solids storage volume for temporary lagoons and 8- to 10-years storage volume for permanent lagoons.

(d) Multiple cells to provide flexibility in operation.

(e) Adjustable decanting devices.

(f) Means of convenient cleaning where appropriate.

(2) APPLICATION TO AGRICULTURAL LAND. The department may allow liquid sludge to be applied to agricultural land by tank truck if the solids do not exceed 10 to 12% by weight. This method requires proper handling facilities, vehicles, and equipment to allow hauling and spreading which does not create a nuisance. Adequate sludge holding facilities are required for use during times that trucks cannot operate. Higher solids content sludges may also be spread. However, prior to increasing the solids content the local department sludge management specialist shall be contacted to evaluate the acceptability of spreading the high solids sludge. Land application of sludge, including the radium-226 content, shall comply with the applicable requirements of s. NR 204.07.

(3) DISCHARGE TO SANITARY SEWER. Discharge to sanitary sewer may be utilized if a study or experience has shown that problems will not occur in the sewage collection system or at the wastewater treatment plant. An equalization tank may be necessary to even out flows to the sewer system. The radionuclide content of the sludge shall comply with s. NR 811.856.

(4) MECHANICAL DEWATERING. Pilot testing of mechanical dewatering is necessary to show the results that may be obtained. The department shall review and approve proposals on a case-by-case basis to insure that water quality and effluent requirements will be met.

NR 811.859 Spent media. (1) GENERAL. Spent media from water treatment plants may require special handling and disposal. The department shall evaluate on a case-by-case basis the proper handling and disposal techniques for spent media under any of the following circumstances:

(a) Granular activated carbon shall be evaluated when treating water with volatile organic compounds or radium, uranium, or radon gas.

(b) Filter sand, green sand, ion exchange media, membranes, support media, and other media that may retain radionuclide material shall be evaluated when treating water with radium-226, radium-228, or uranium.

(2) DISPOSAL APPROVAL. The department shall be contacted for approval prior to disposal of the medias listed in sub. (1). A written request indicating the type of media, the volume of media, the contaminants of concern and their concentration in the influent water and the media, the proposed method of transportation, and the proposed method of disposal shall be submitted to the department.

NR 811.860 Backwash wastewater from surface water treatment plants. Filter backwash wastewater from surface water treatment plants shall be disposed of by any of the following methods:

(1) RECYCLING. Filter backwash wastewater may be returned to the inlet end of the plant in accordance with the requirements of s. NR 811.862. Membrane filtration plants may not recycle backwash wastewater unless the waste goes through coagulation and settling processes prior to being applied to the membranes. Membrane manufacturers may have specific feed water quality parameter requirements that could limit recycling. Chemical cleaning waste from membrane plants may not be recycled unless specifically approved by the department. All plants recycling filter wastewater shall have an alternative means of disposing of wastewater available during challenging raw water quality periods.

(2) DISCHARGE TO SANITARY SEWER. The wastewater program of the department may approve direct or controlled discharge to a sanitary sewer system if the discharge will not overload the facilities or adversely affect the wastewater treatment process.

(3) DISCHARGE TO SURFACE WATER. Suspended solids shall be removed from the filter backwash wastewater before the filter backwash wastewater is discharged to surface water. This will require settling and possibly coagulation. Any discharge requires a WPDES Permit. Chemical cleaning waste from membrane plants may not be discharged to surface water.

(4) TREATED BY SECONDARY MEMBRANE. The filter backwash water may be treated by a dedicated membrane system and sent to the clearwell if approved by the department in accordance with all of the following requirements:

(a) The membrane, as can be demonstrated by integrity testing conducted every 8 hours, shall provide a minimum 5.5 log removal of *Cryptosporidium*.

(b) If the membrane cannot be demonstrated to provide a 5.5 log removal of *Cryptosporidium*, UV shall be provided following the membrane. The membrane and UV

together shall provide a minimum of 5.5 logs of removal or inactivation of *Cryptosporidium*, or a combination of both.

(c) A target removal of less than 5.5 logs of *Cryptosporidium* may be considered by the department if testing of the backwash water in accordance with s. NR 809.334 and bin classification in accordance with s. NR 810.34 would result in a bin classification less than Bin 4.

NR 811.861 Alum or other coagulant sludge. Alum or other coagulant sludge shall be disposed of by the following methods:

(1) LAGOONS. The general design criteria for lagoons is in s. NR 811.858 (1).

(2) DISCHARGE TO SANITARY SEWERS. Discharge to sanitary sewers may be utilized if a study or experience has shown that problems will not occur in the sewage collection system or at the sewage treatment plant. A holding tank may be necessary to even out flows to the sewer system. The radionuclide content of the sludge shall comply with s. NR 811.856.

(3) MECHANICAL DEWATERING. Mechanical dewatering may be utilized if approved by the department after review of the results of testing.

(4) SUPERNATENT WATER. Any thickener supernatant or liquids from dewatering processes to be recycled shall meet the requirements of s. NR 811.862.

NR 811.862 Recycling backwash wastewater. Filter and contactor backwash wastewater may be recycled if approved by the department in accordance with all of the following requirements:

(1) The filter and contactor backwash wastewater shall be settled in a settling tank or equalization basin prior to being returned to the inlet end of the plant. For surface water systems, a coagulant or polymer may be required to enhance settling to prevent protozoans such as *Giardia lamblia* and *Cryptosporidium* from concentrating. Tanks and basins shall meet all of the following minimum requirements:

(a) The tanks shall contain the anticipated volume of backwash wastewater produced by the plant when operating at design capacity.

(b) The tanks shall be of adequate size to contain the total waste washwater from two consecutive backwashes to provide operation flexibility.

(2) The settled filtered backwash wastewater shall be returned to the head end of the plant at a maximum rate of 10% of the instantaneous flow rate at which raw water is entering the plant. All of the following requirements shall be met:

(a) The point of recycle shall be prior to all treatment and chemical addition except chemical treatment for zebra mussel control at the intake.

(b) A meter shall be provided on the recycle line.

(c) A means shall be provided for controlling the rate at which the settled backwash wastewater is returned.

(3) For systems treating groundwater, the settled filtered backwash wastewater shall be disinfected prior to or at the time that it is returned to the head end of the plant.

(4) Reservoirs to be used to settle backwash wastewater for plants treating potable groundwater shall be constructed to potable reservoir construction standards as required by subch. IX. The discharge of any wastewater or sludge, or both, from such a reservoir to a sanitary or storm sewer main, manhole, or other collection structure, whether by pump or by gravity, shall not be made through a direct connection. The discharge piping

shall terminate downward with a one-foot free air break over the receiving structure as required in s. NR 811.64 (4).

(5) For surface water systems that recycle their backwash wastewater, all of the following reporting and record keeping requirements apply:

(a) A current plant schematic showing the origin of all recycle streams, how any recycle streams are transported, and where the recycle streams enter the treatment process shall be maintained on file with the department.

(b) Information on the typical recycle flow rate, the highest observed plant flow rate each year, and the design flow rate of the plant shall be available to the department upon request.

(c) The information in pars. (a) and (b) along with all of the following information shall be maintained on file for a minimum of 10 years: dates when recycle flow rate has exceeded 10 per cent of raw water flow rate entering the plant; how recycle flow rate is controlled; dimension and volume of backwash equalization basin; typical detention time in equalization basin; type of coagulant fed prior to equalization basin; and means of sludge removal from the equalization basin.

SUBCHAPTER XIII, AQUIFER STORAGE RECOVERY

NR 811.87 General. (1) Approval of the department is required prior to the construction of any aquifer storage recovery well or the conversion of any previously constructed well for use as an aquifer storage recovery well.

Note: Approval to construct or develop an aquifer storage recovery well is not an approval to operate an ASR system.

(2) Approval of the department is required prior to the operation of any aquifer storage recovery system.

Note: The department will not issue an approval to operate an ASR system until after it has reviewed and evaluated the results of an approved ASR pilot study.

(3) Only treated drinking water may be placed underground through an ASR system well.

(4) Only a municipal water system may construct an aquifer storage recovery well or operate an ASR system.

(5) The displacement zone around an ASR well may extend no further than 1,200 feet from that ASR well.

NR 811.88 ASR well performance requirements.

(1) Unless the department determines that it is not technically or economically feasible, the quality of the treated drinking water to be placed underground through an aquifer storage recovery well shall comply with the preventive action limits contained in ch. NR 140 prior to underground injection. In all cases, the quality of the treated drinking water to be placed underground through an aquifer storage recovery well shall meet the primary drinking water standards contained in ch. NR 809 and may not contain any substance at a concentration that exceeds a state or federal health advisory prior to underground injection.

Note: Pursuant to s. 160.19 (2) (b), Stats., the department finds that treated drinking water in a municipal water system may at times exceed preventive action limits established for iron, manganese, nitrate, nitrite, copper, lead, fluoride, asbestos,

chloroform, bromoform, bromodichloromethane, and dibromochloromethane. Such exceedances may occur at the point of underground injection and within the displacement zone surrounding an aquifer storage recovery well even though the treated water being injected would remain in compliance with federal and state water quality standards for drinking water. The maximum allowable concentration of a primary drinking water contaminant in treated drinking water has been set by the United States Environmental Protection Agency at the lowest level that is considered to be technically and economically achievable at this time. The department also finds that it is not technically or economically feasible to require that residual concentrations of chloroform, bromoform, bromodichloromethane, and dibromochloromethane be removed from the injected water when a disinfection residual is desired at the wellhead to provide additional protection to the water system from potential biological contamination.

(2) All water that is retrieved through an aquifer storage recovery well shall comply with the primary drinking water standards contained in ch. NR 809 and shall be treated to provide a disinfectant residual prior to recovery into any municipal water distribution system.

(3) The quality of treated drinking water stored in a displacement zone shall at all times comply with the primary drinking water standards contained in ch. NR 809. ASR systems shall be designed and operated to maintain compliance with the groundwater standards contained in ch. NR 140, as required by s. NR 140.22. Therefore, treated drinking water stored underground in an ASR system shall comply with the applicable enforcement standards established in ch. NR 140 prior to movement beyond the property boundary of the ASR well site.

Note: An ASR well site is considered to include lands adjacent to the ASR wellhead that are directly owned by the municipal water system and any contiguous properties that are directly owned by the local unit of government of which the water system is a subunit.

(4) At the completion of each aquifer storage recovery cycle, the subsurface water in any portion of a displacement zone may not attain or exceed ch. NR 140 enforcement standards for iron, manganese, nitrate, nitrite, copper, lead, fluoride, asbestos, chloroform, bromoform, bromodichloromethane or dibromochloromethane or ch. NR 140 preventive action limits established for any other substance. The department may grant an exemption from this requirement, in accordance with s. NR 140.28, when an ASR well or ASR system is located in an area where the background concentration of a substance attains or exceeds the groundwater preventive action limit or enforcement standard established for that substance.

Note: Pursuant to s. 160.19 (2) (b), Stats., the department finds that routine operation of an ASR system may result in an exceedance of the preventive action limits established for iron, manganese, nitrate, nitrite, copper, lead, fluoride, asbestos chloroform, bromoform, bromodichloromethane, and dibromochloromethane in a displacement zone. An ASR cycle is normally completed when the volume of water recovered equals the volume of water that was originally injected; however, the department recognizes that some of the treated drinking water injected during an aquifer storage recovery cycle may remain in an aquifer at the completion of the cycle and that substances present in this residual treated drinking water may result in ch. NR 140 preventive action limits being exceeded in an aquifer at the completion of an aquifer storage recovery cycle.

NR 811.89 Well construction requirements for ASR wells. (1) Each well constructed or converted for use as an aquifer storage recovery well shall be completed in a manner that complies with the well construction requirements established in ss. NR 811.12 to 811.20.

(2) Any monitoring well constructed on an ASR well site shall comply with the well construction requirements established in ss. NR 811.12 to 811.20. For the purpose of this subsection, an ASR well site is considered to include only those lands adjacent to the ASR wellhead that are directly owned by the municipal water system.

(3) Each monitoring well that is located beyond the property boundary of an ASR well site and that is constructed as part of an ASR system pilot study, ASR system development study, or for ASR operational monitoring shall comply with the monitoring well construction requirements established in ch. NR 141. For the purpose of this subsection, an ASR well site is considered to include only those lands adjacent to the ASR wellhead that are directly owned by the municipal water system.

(4) Each aquifer storage recovery well shall be enclosed within a lockable protective structure that is secured from tampering or unauthorized entry in a manner that is approved by the department.

(5) Each monitoring well shall be enclosed within a lockable protective covering and secured from tampering or unauthorized entry in a manner that is approved by the department.

NR 811.90 Equipment, appurtenances and piping for ASR wells and ASR systems. (1) Pumping equipment, appurtenances and piping that are to be installed as part of an ASR system shall comply with the requirements of ss. NR 811.30 to 811.37.

(2) Department approval shall be obtained prior to installation or modification of any well, pumping equipment, appurtenances or piping for the purpose of aquifer storage recovery.

(3) Security shall be provided for each ASR well site in a manner that is approved by the department.

NR 811.91 ASR system pilot studies. (1) Department approval is required prior to conducting any ASR system pilot study.

(2) Only a municipal water system may perform an ASR system pilot study.

(3) A request to conduct an ASR system pilot study shall be submitted to the department in writing. The request shall identify the location of each existing well that is being considered for use as an ASR well within the proposed ASR system, the location of any new well that is anticipated to be constructed for use as an ASR well within the proposed ASR system and any additional wells that are to be used or constructed as part of the ASR system pilot study.

(4) Each request to conduct an ASR system pilot study shall contain all of the following:

(a) A preliminary hydrogeologic report that describes the methods and results of any hydrologic investigation, aquifer testing, hydrogeologic modeling or geochemical modeling performed to identify the location of the proposed ASR system well sites. The preliminary hydrogeologic report shall identify the location of each existing public or private water well and each potential source of groundwater contamination that is located within 1200 feet of the outer perimeter of the displacement zone that is calculated to be established around each of the proposed ASR wells within the proposed ASR system.

The report shall also identify the well selected for further evaluation during the ASR well pilot test, identify the dimensions of the displacement zone that will be created around the designated test well, and describe the current and anticipated groundwater flow patterns found in the vicinity of the designated test well.

(b) A preliminary engineering report that provides an analysis of the technical feasibility for developing each of the potential ASR wells identified for the proposed ASR system and estimates the probable percentage of treated drinking water that would be recovered from each of the potential ASR wells during an ASR cycle.

(c) Plans and specifications for any well equipment, pumping equipment, appurtenances or piping that is to be constructed or altered in order to complete the proposed ASR system pilot study.

(d) A description of all operating procedures to be followed during the ASR well pilot study. This description shall contain details such as, but not limited to, the maximum volume of water to be placed underground, the flow rate and pressure of underground injection, the expected water storage period, anticipated water retrieval rates, and methods proposed for disposing of the water recovered during the ASR system pilot study.

(e) A description of all performance and compliance monitoring procedures to be followed during the ASR system pilot study. This description shall include a listing of the sampling locations, methods and schedules that will be used to ensure that the aquifer storage recovery well remains in compliance with the performance requirements set forth in s. NR 811.88.

(f) Plans and specifications for each monitoring well proposed as part of the ASR system pilot study. A minimum of one monitoring well is required as part of the ASR system pilot study. The department may require additional monitoring wells should the proposed ASR system encompass multiple or otherwise unique geologic formations. The department may also waive the monitoring well requirement if water quality data from other ASR system pilot studies conducted in similar geologic conditions is submitted as part of the ASR system pilot study request and is determined to be applicable by the department.

(5) The department may require modification of plans and specifications, operating procedures or compliance and monitoring procedures required in sub. (4) to ensure that compliance with the performance requirements in s. NR 811.88 can be determined.

(6) Within 180 days after completing an approved ASR system pilot study or prior to recovering any water retrieved through an ASR well into a water distribution system, a municipal water system shall submit a final report on the ASR system pilot study to the department.

NR 811.92 ASR system development testing.

(1) Department approval shall be obtained prior to any ASR system development testing.

(2) Following the completion of an approved ASR system pilot study, each additional ASR well that is to be developed within an ASR system shall be subject to ASR system development testing.

(3) The department may require monitoring wells to be installed as part of an ASR system development test if it finds any of the following:

(a) Geologic conditions in the vicinity of the proposed ASR well are not consistent with the conditions examined during the municipal water system's ASR system pilot study.

(b) Geologic conditions in the vicinity of the proposed ASR well are not consistent with the conditions reported in other ASR system pilot studies or ASR system development tests performed by other municipal water systems.

(c) Results obtained during the municipal water system's ASR system pilot study or other aquifer tests indicate that additional monitoring is warranted to ensure compliance with the water quality standards established in chs. NR 140 and 809.

(4) Each request for an ASR system development test shall include a report or testing plan that contains the following:

(a) A comparison of the hydrogeologic conditions and formations found at the ASR system pilot study well site and any well site that is to be evaluated as part of the ASR system development testing request.

(b) An evaluation of the municipal water system's ASR system pilot test results and the transferability of those results to any well that is to be included as part of the ASR system development test.

(c) Plans and specifications for any well equipment, pumping equipment, appurtenances or piping that is to be constructed or altered as part of the ASR system development test.

(d) A description of all operating procedures to be followed during the ASR system development test. This description shall contain details such as, but not limited to, the volume of water to be placed underground, the flow rate and pressure of underground injection, backflushing schedules, the expected water storage period, anticipated water retrieval rates and methods for disposing of water recovered during the ASR system development test.

(e) A description of all performance and compliance monitoring procedures to be followed during the ASR system development test.

(f) A description of any monitoring wells proposed to be constructed or utilized during the ASR system development test.

(5) The department may require modification of plans and specifications, operating procedures or compliance and monitoring procedures required under sub. (4) to ensure that compliance with the performance requirements in s. NR 811.88 can be determined.

(6) Within 180 days after completing an approved ASR system development test or prior to recovering any water retrieved through any newly developed aquifer storage recovery well into a water distribution system, the municipal water system conducting the test shall submit a final report containing the final results of the investigation to the department.

(7) The department may deny a request to perform an ASR system development test if it determines that the test cannot be conducted in a manner that is protective of human health or the environment. Whenever a request to perform an ASR system development test is denied, the department shall provide the person who submitted the request for an ASR development test with a written explanation of the reasons for denying the request.

NR 811.93 Operating an ASR system. (1) Department approval to operate an ASR system shall be obtained prior to recovery of any water retrieved through an aquifer storage recovery well into a municipal water system.

(2) Only a municipal water system may submit a request to operate an ASR system.

(3) Completion of an ASR pilot study is required before a municipal water system may submit a request to operate an ASR system.

(4) Completion of an ASR system development test and approval of the department is required before any additional aquifer storage recovery well that was not approved as part of an original request to operate an ASR system is connected to the existing ASR system.

(5) A request to operate an ASR system shall be submitted to the department in writing and shall contain the following:

(a) A copy of the final report of the approved ASR system pilot study and copies of any approved ASR system development studies conducted by the municipal water system.

(b) A final plans and specifications report that describes the components of the ASR system. The final plans and specifications report shall include as built drawings for each aquifer storage recovery well and each monitoring well that was constructed as part of the ASR system pilot study or ASR system development study. The report shall also include descriptions of pumping equipment, piping and other appurtenances that are installed or required for ASR system operation.

(c) A proposed final operating plan that describes the entire ASR cycle and shows how the ASR system will be integrated into municipal water system operations. The proposed final operating plan shall include details such as, but not limited to, the total volume of water to be injected, rate of injection, pressure of injection, length of the water storage period, rate of recovery, post−recovery water treatment techniques necessary to maintain a distribution system disinfectant residual, and methods for disposing of any water that cannot be recovered into the water distribution system.

(d) A proposed demand management and water accountability plan that describes actions which the municipal water system is currently conducting or will be initiating to ensure that groundwater and surface water resources are conserved and used as efficiently as possible.

(e) A proposed compliance and monitoring plan that lists all sampling parameters and provides details on monitoring schedules, monitoring locations, sampling methods and quality assurance techniques that will be followed to ensure that compliance with the requirements set forth in s. NR 811.88 is maintained. The compliance and monitoring plan shall provide for testing of the water that is to be injected, stored and recovered through each aquifer storage recovery well and for the groundwater present in any monitoring well that is installed as part of the ASR system. Parameters to be analyzed for each water quality sample collected, the locations for sample collection and the frequency at which water quality samples are to be collected shall be determined by the department following a review of the final ASR system pilot study report or ASR system development study report, the proposed operating plan, the proposed monitoring plan and the drinking water quality monitoring schedule currently followed by the municipal water system. Unless otherwise specified by the department, all water quality results obtained from ASR system compliance monitoring activities shall be compiled and submitted to the department on an annual basis and at least 45 days prior to the start of each new ASR cycle.

(6) The department may require modification of any plans and specifications, operating plans, demand management and water accountability plans or compliance and monitoring plans required in sub. (5) in any manner necessary to ensure compliance with the performance standards set forth in s. NR 811.88.

(7) If requested, the department may consider and approve the modification of plans and specifications, operating plans, demand management and water accountability plans or compliance and monitoring plans required in sub. (5) if information submitted in support of a requested modification demonstrates to the satisfaction of the department that the proposed modifications will continue to ensure compliance with the standards set forth in s. NR 811.88 and any other applicable requirements contained in ch. NR 811.

Appendix

Figure No. 1
Pump capacities for domestic water service.

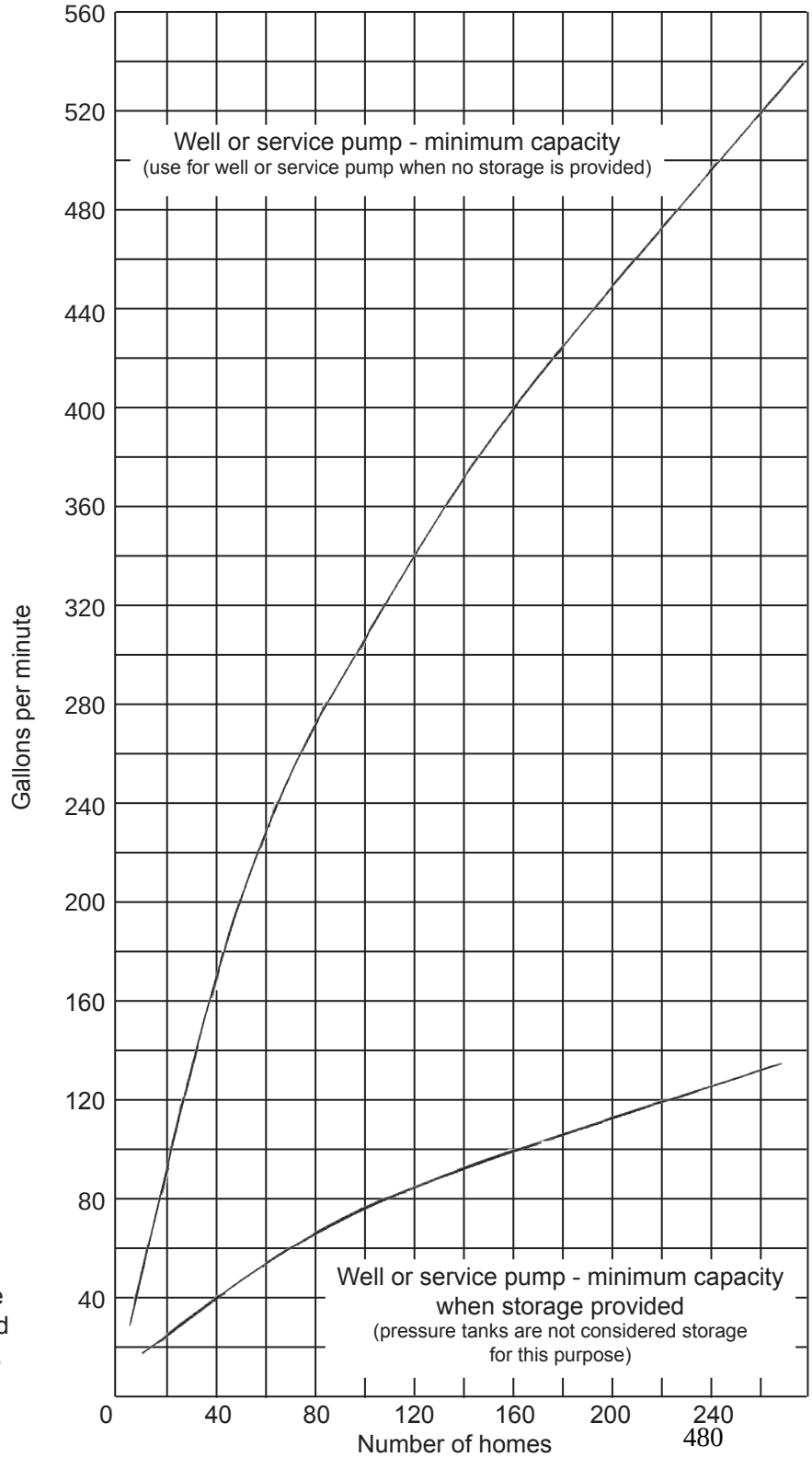

The number of homes when using figure No. 1 may be reduced by one-third for apartment units, condominium units and mobile homes.

Figure No. 2
Line-shaft vertical turbine pump base installation.
(No outer well casing)

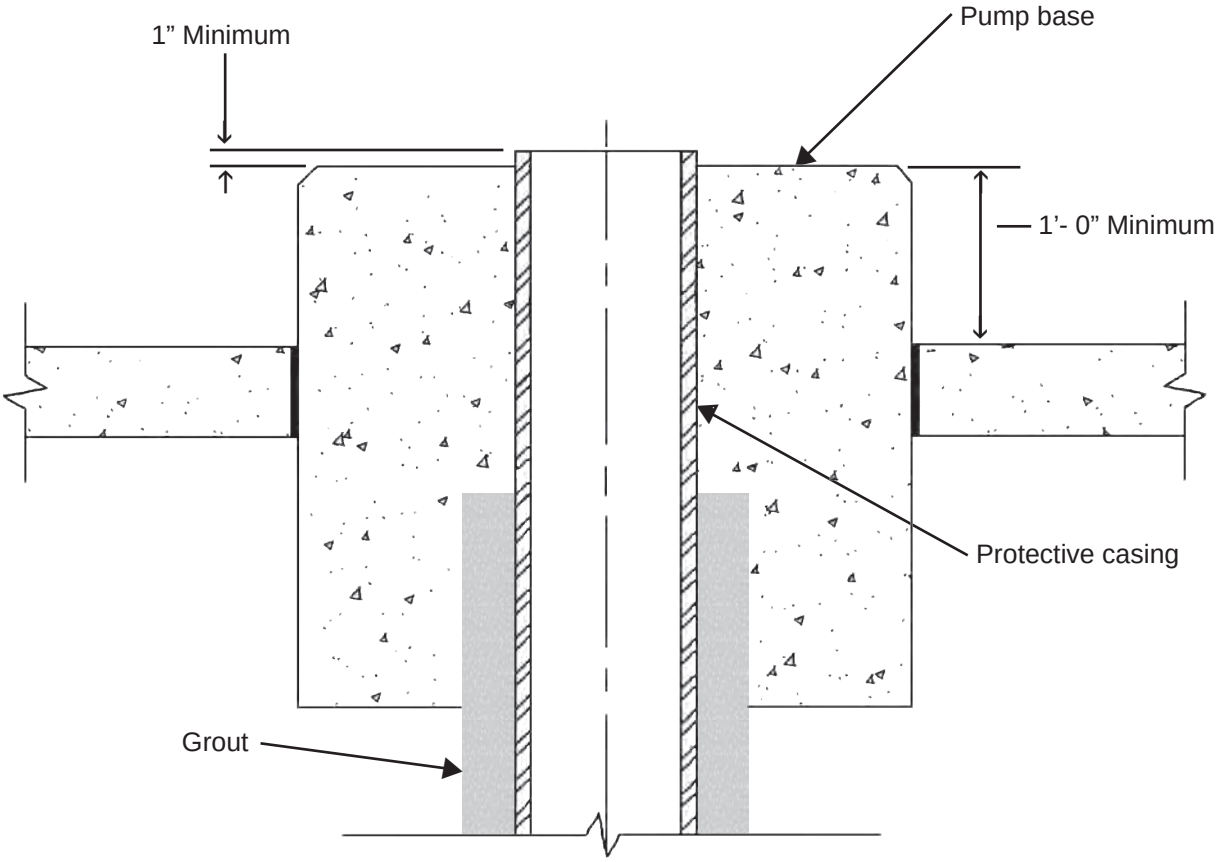

Figure No. 3
Line-shaft vertical turbine pump base installation.
(With an inner ungrouted well casing)

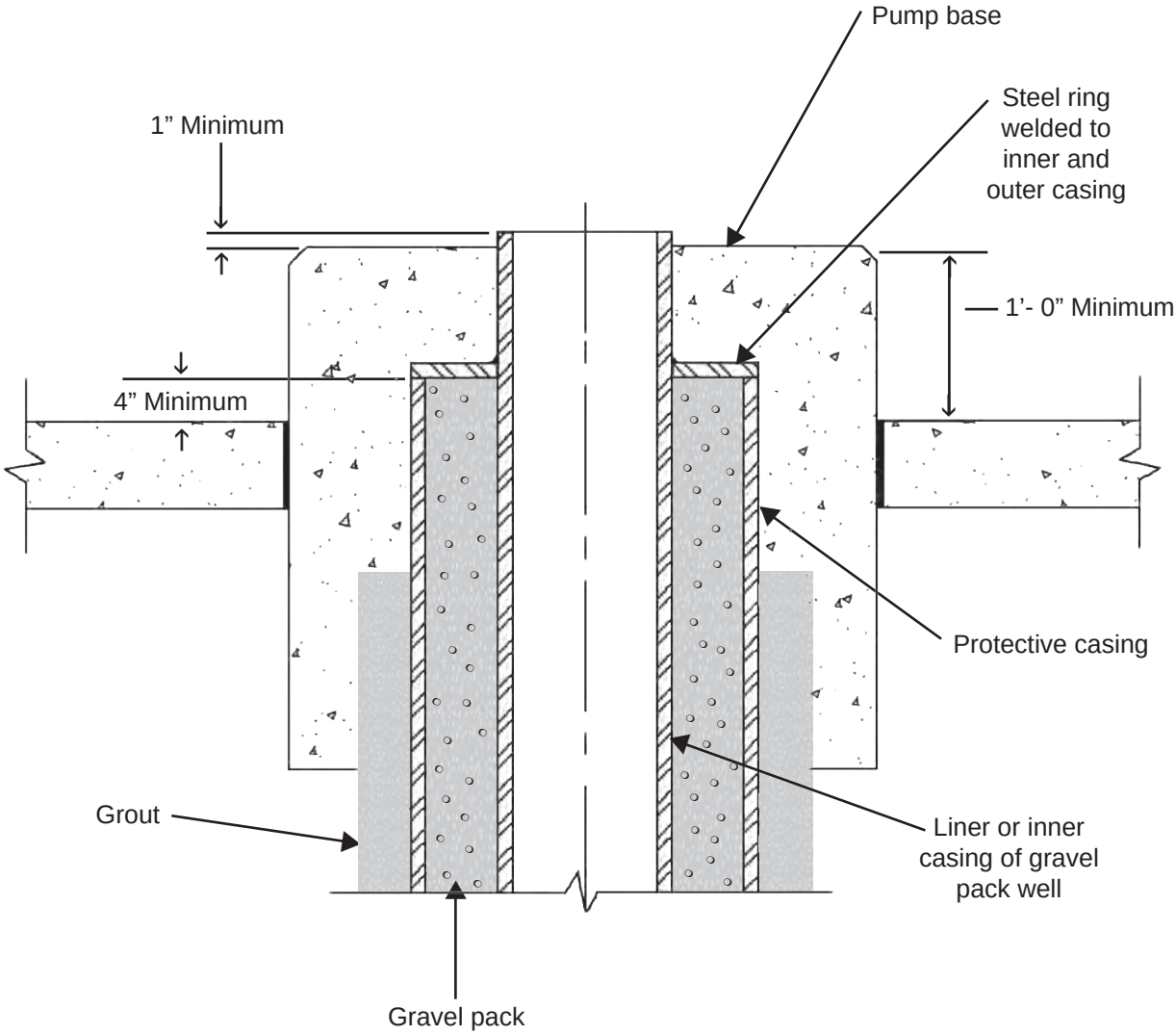

Figure No. 4
Submersible vertical turbine pump base installation.
(Without an outer casing)

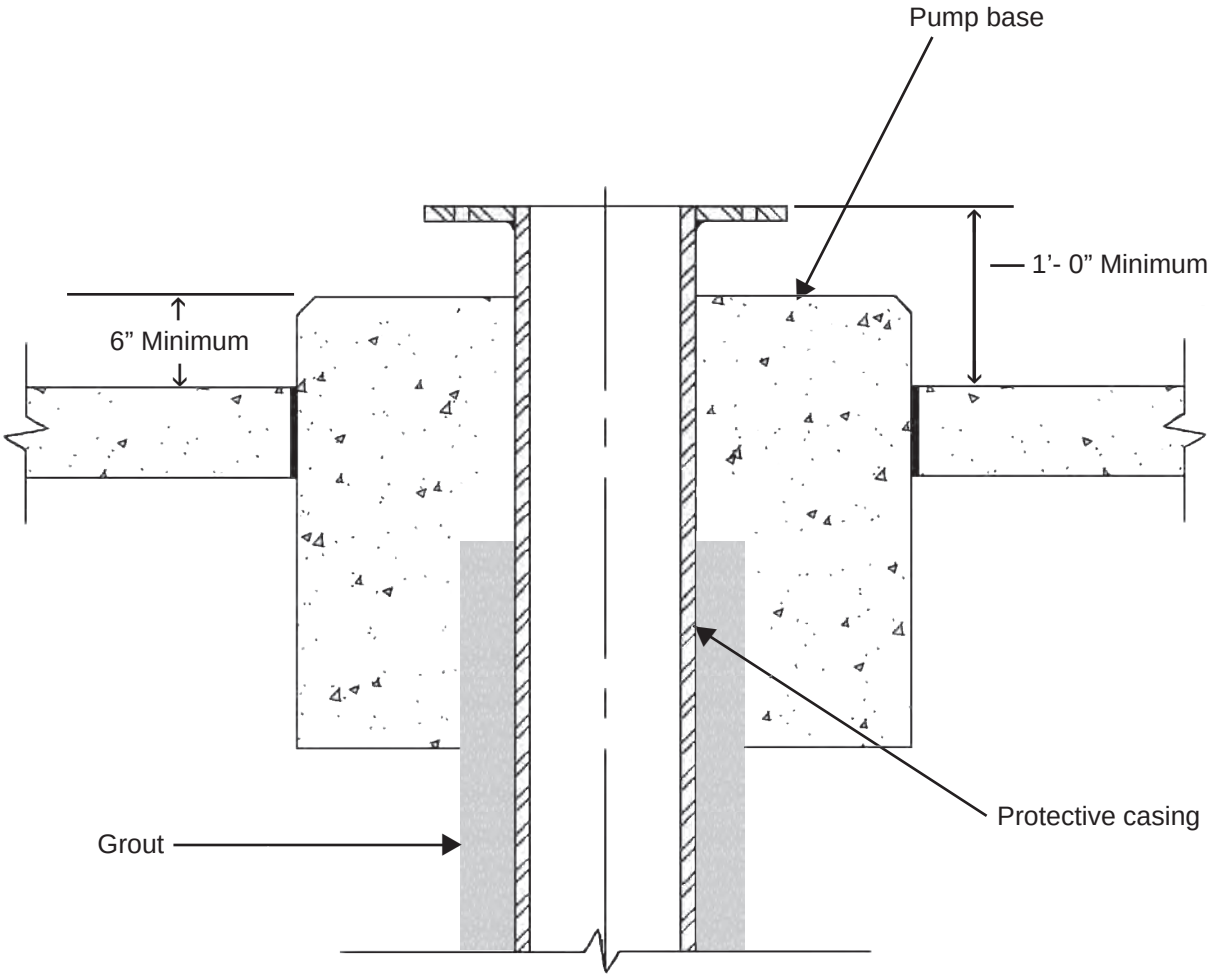

Figure No. 5
Submersible vertical turbine pump base installation.
(With an inner ungrouted well casing)

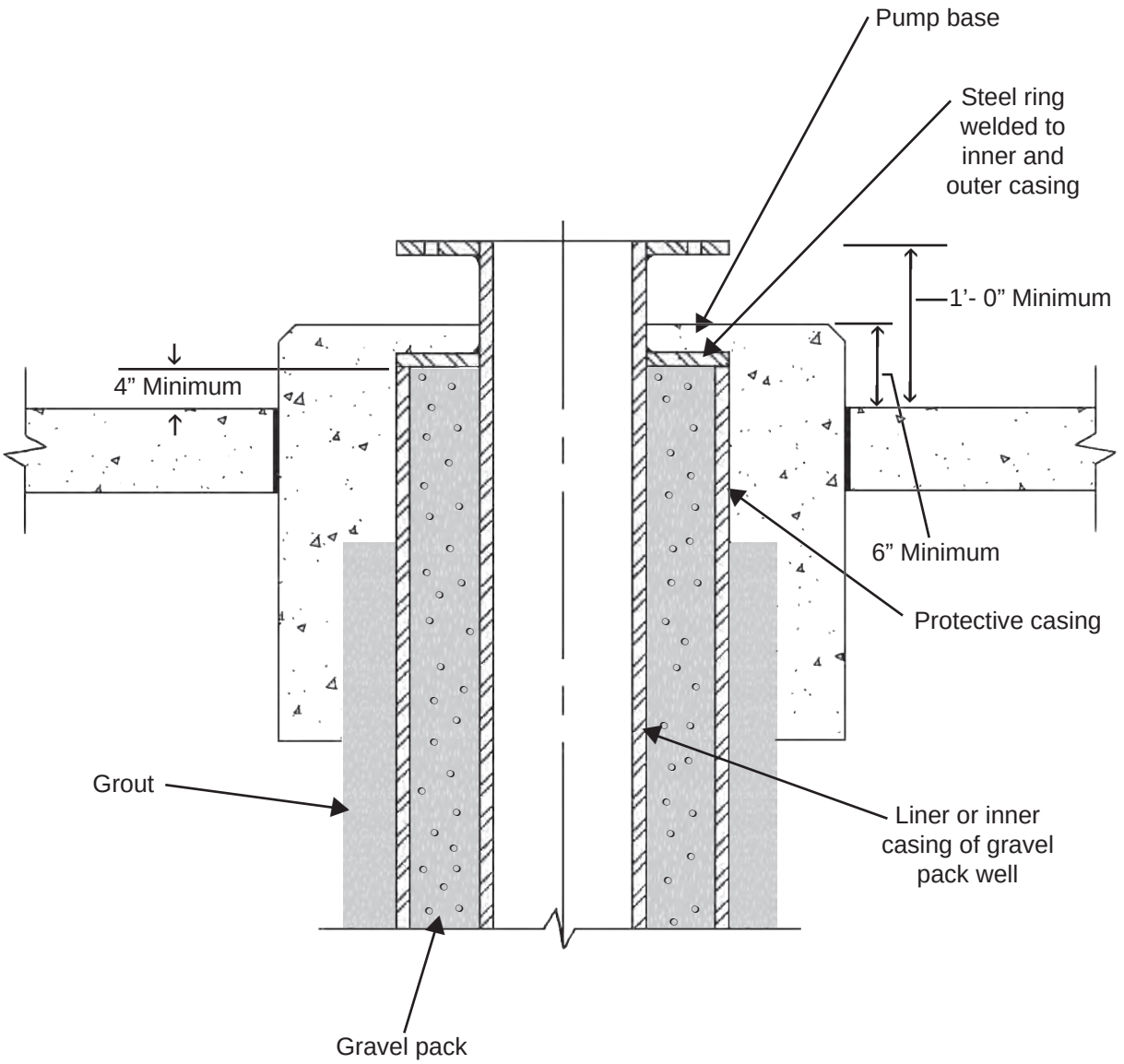

Figure No. 6
Submersible vertical turbine pump base installation.
(With an outer well casing installed to provide a protective collar.)

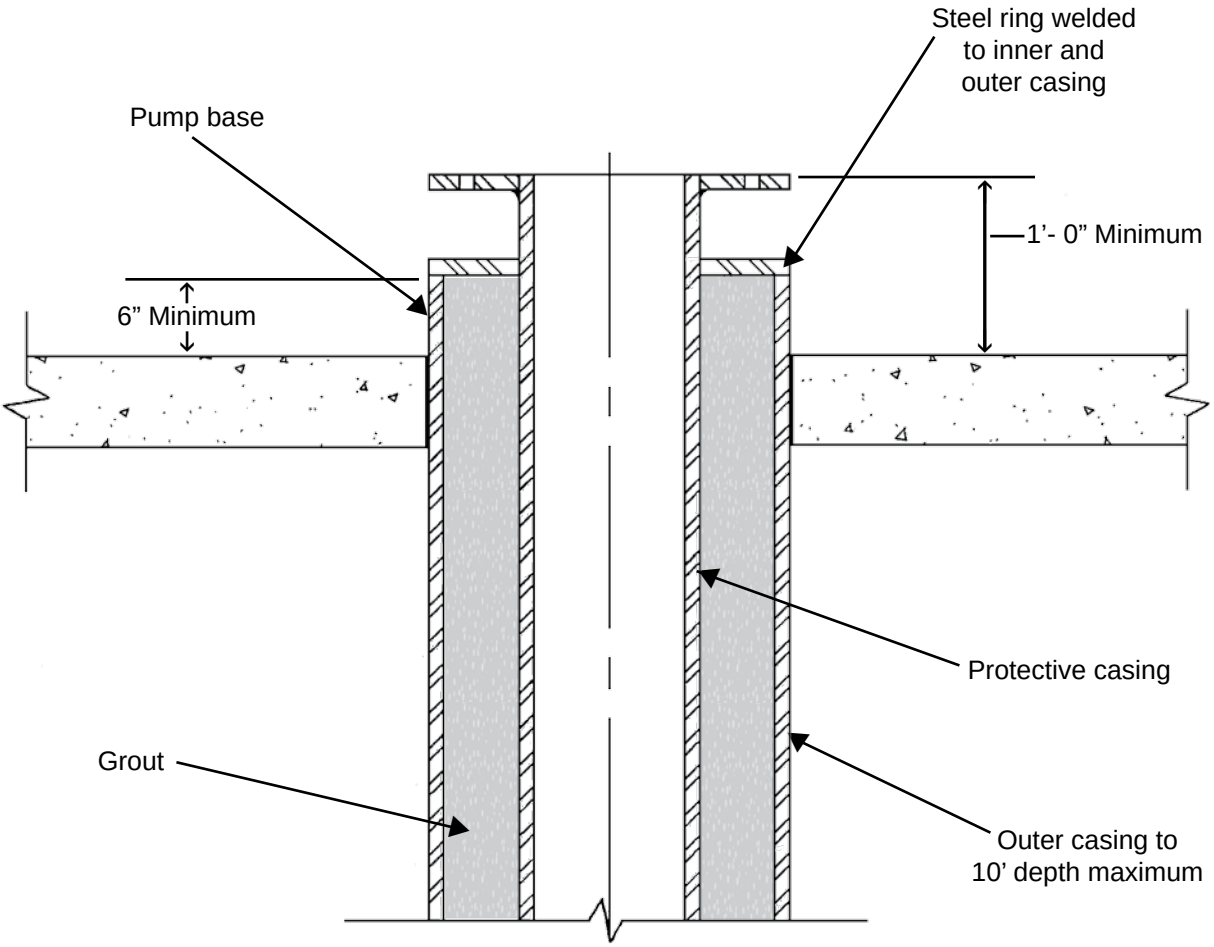

Figure No. 7
Pitless unit installations.

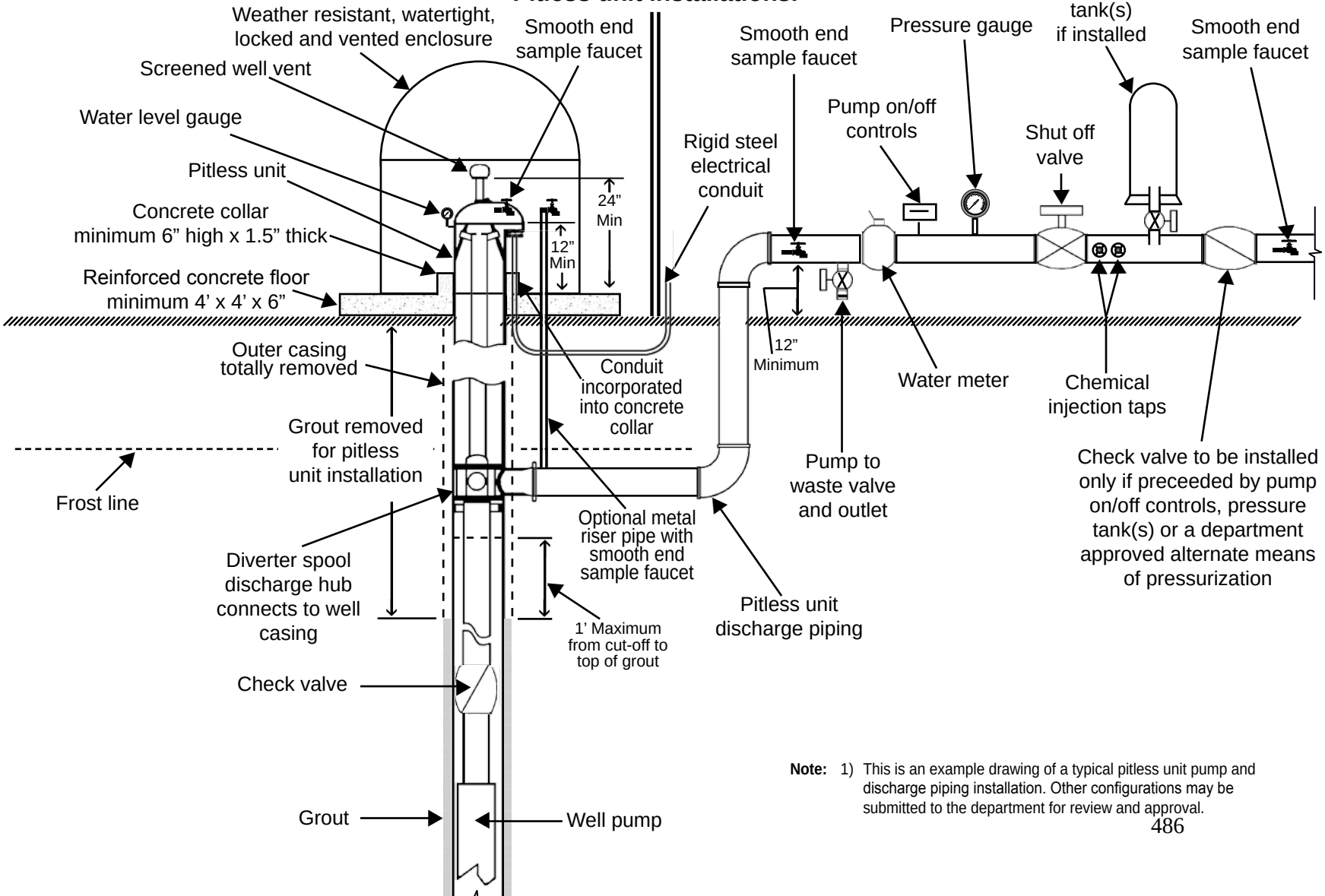

Note: 1) This is an example drawing of a typical pitless unit pump and discharge piping installation. Other configurations may be submitted to the department for review and approval.

Figure No. 8
Example line-shaft vertical turbine pump and discharge piping installation.

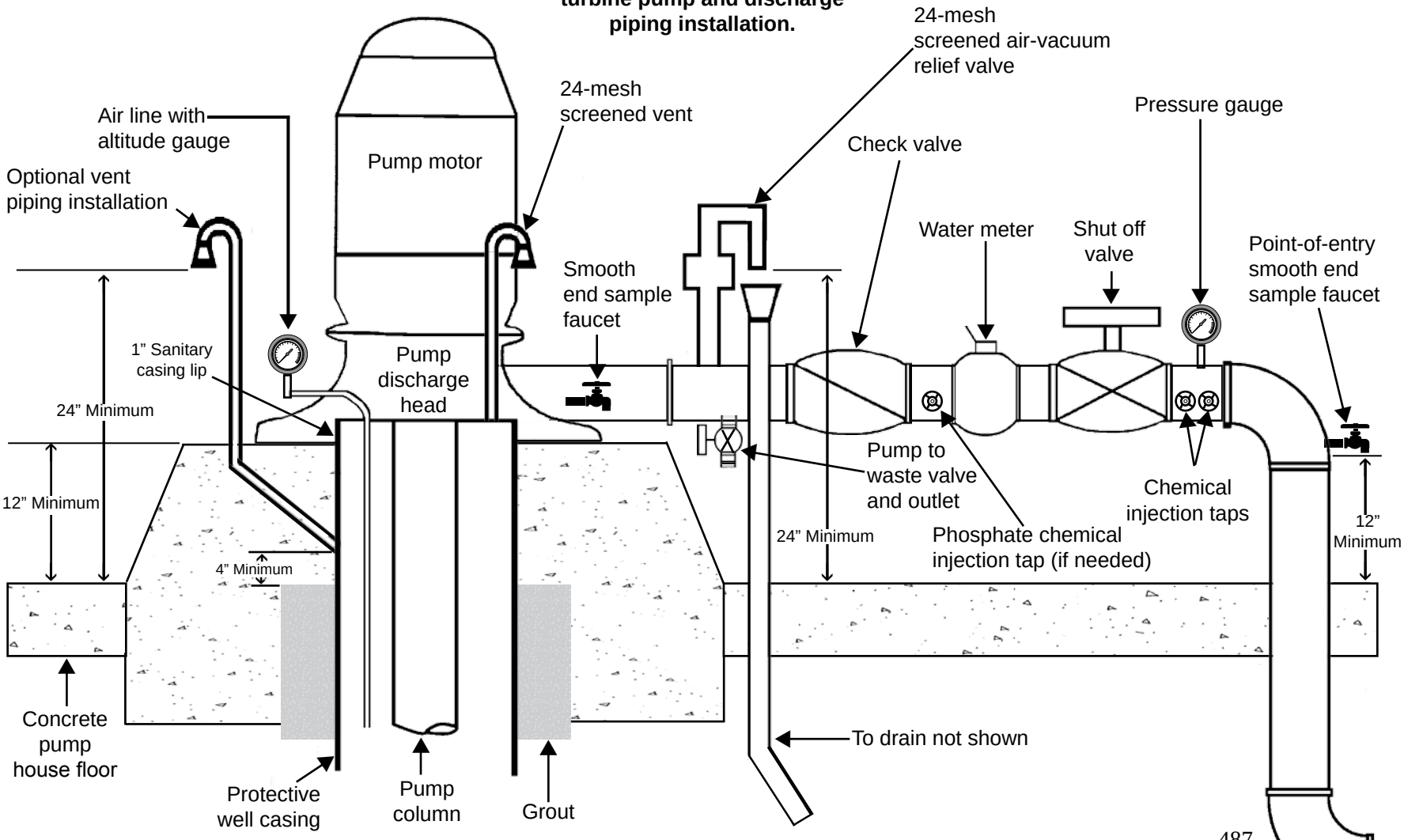

Notes: 1) This is an example drawing of a typical pump and discharge piping installation. Other configurations may be submitted to the department for review and approval.
2) Vent piping diameter shall be a minimum of 2" for well casings 10" in diameter and larger.
3) The pump to waste fitting may be a hydrant installation installed outside the pump station for municipal and subdivision water systems.

Figure No. 9

Example submersible vertical turbine pump and discharge piping installation.

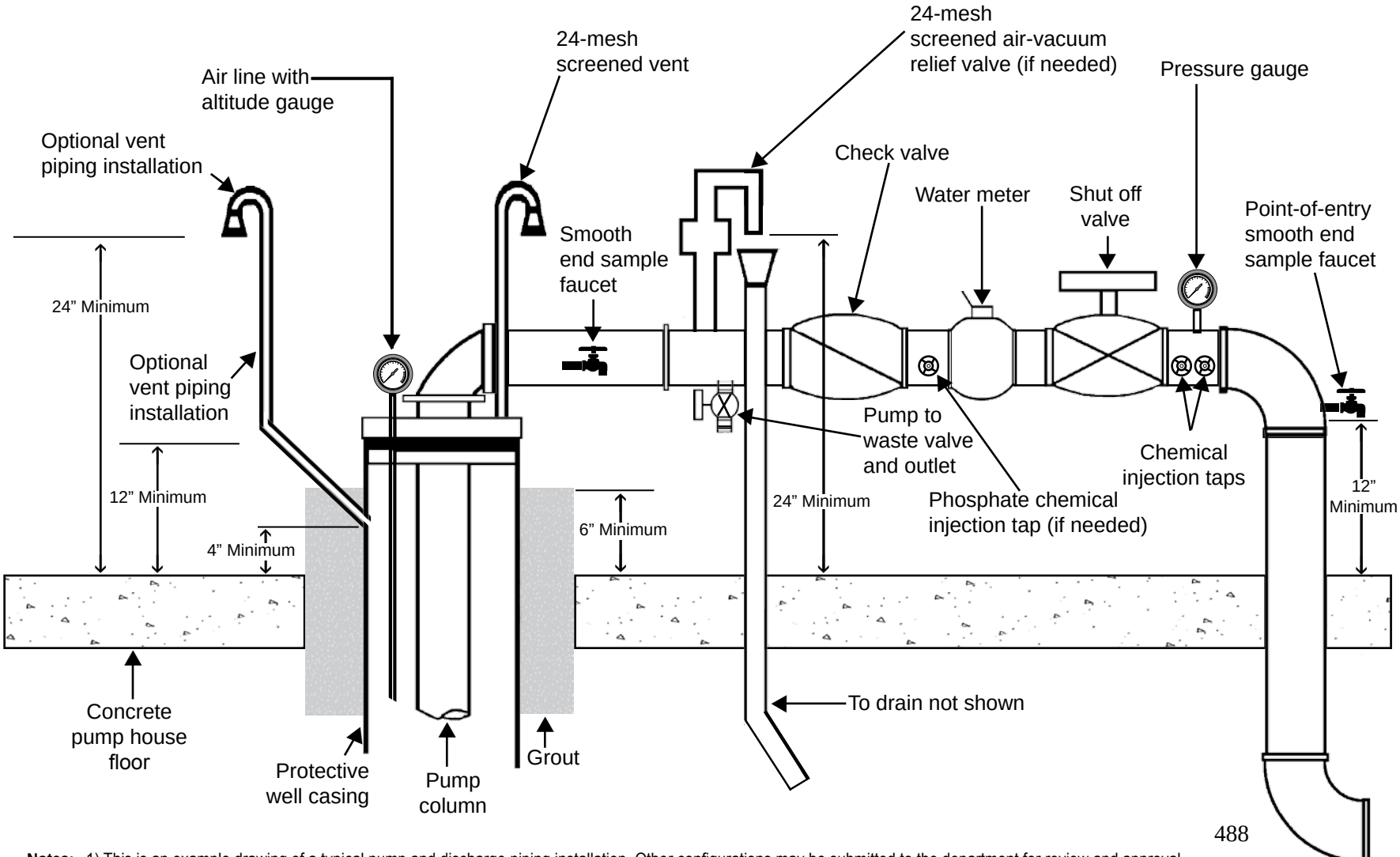

Notes: 1) This is an example drawing of a typical pump and discharge piping installation. Other configurations may be submitted to the department for review and approval.
2) Vent piping diameter shall be a minimum of 2" for well casings 10" in diameter and larger.
3) The pump to waste fitting may be a hydrant installation installed outside the pump station for municipal and subdivision water systems.

Figure No. 10
Common trench installation requirements for water main and sanitary or storm sewers.

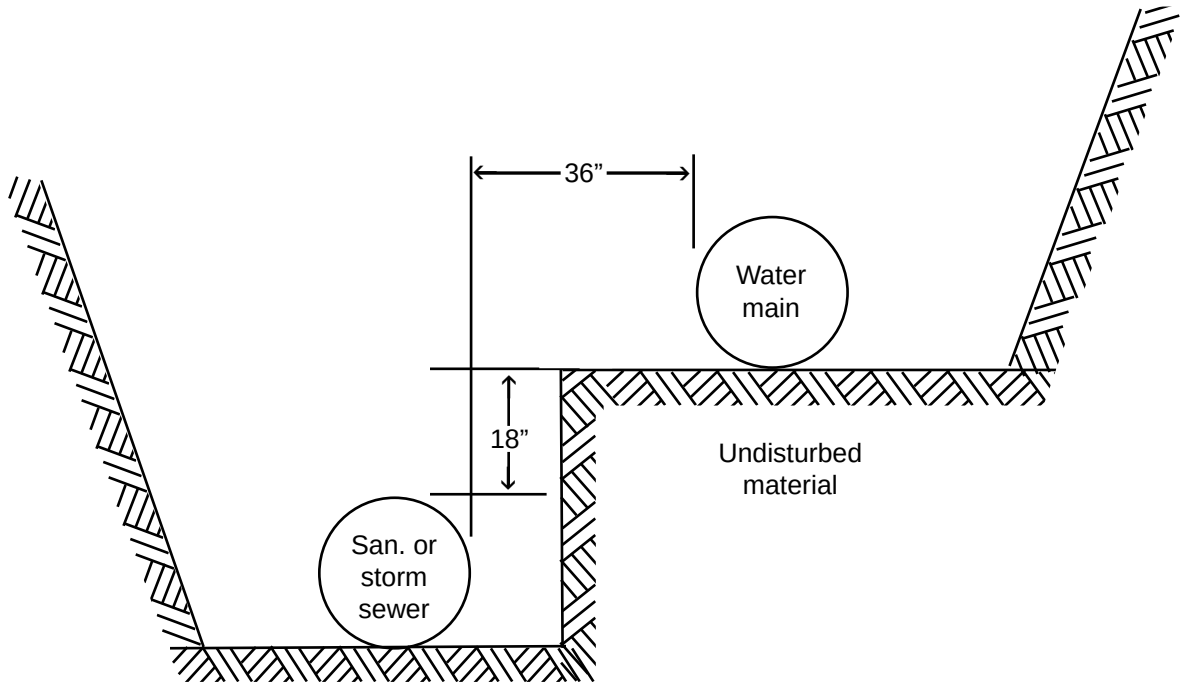

Figure No. 11
Acceptable water loading station devices.

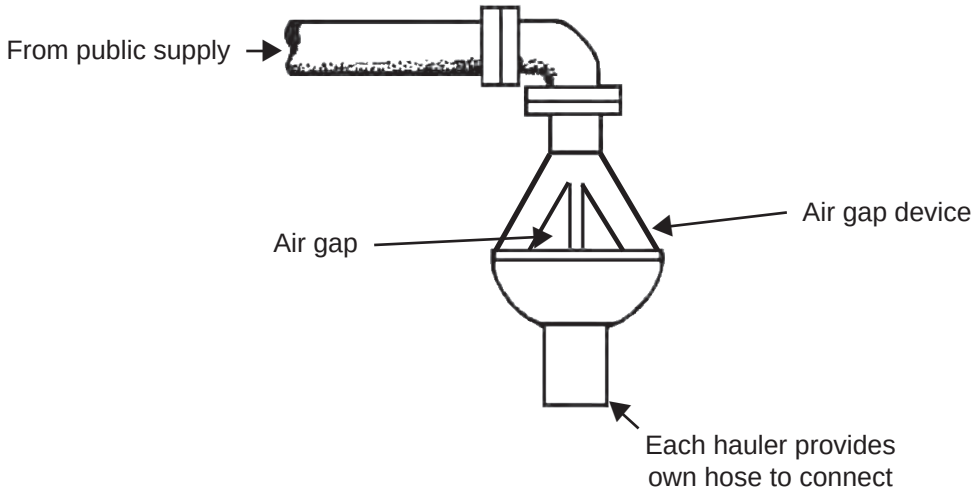

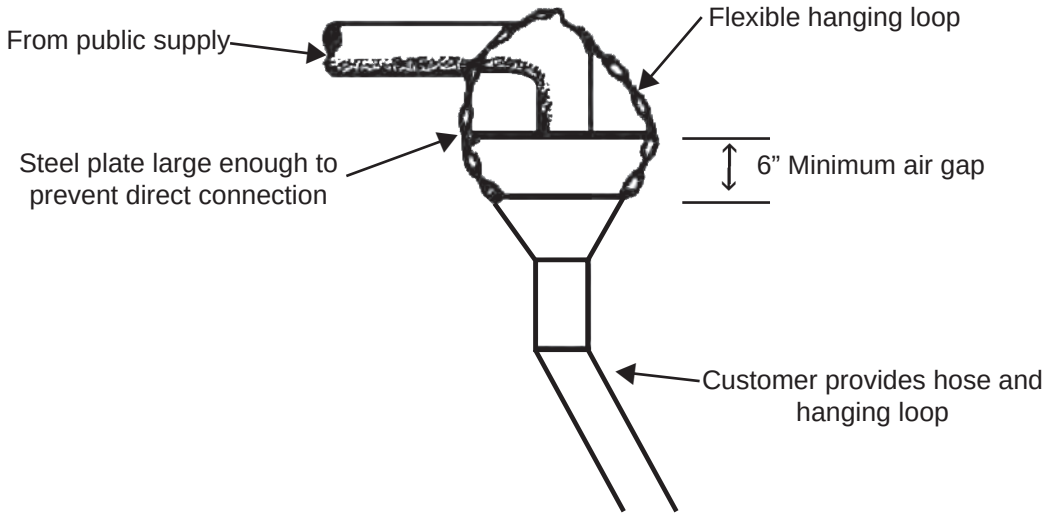

SECTION 4. EFFECTIVE DATE. These rules shall take effect on the first day of the month following publication in the Wisconsin administrative register as provided in s. 227.22 (2) (intro.), Stats.

SECTION 5. BOARD ADOPTION. These rules were approved and adopted by the State of Wisconsin Natural Resources Board on _____.

Dated at Madison, Wisconsin _____.

STATE OF WISCONSIN
DEPARTMENT OF NATURAL RESOURCES

By_____
Matthew J. Frank, Secretary

(SEAL)